Home Automatic Washers

Refer to Page 5 for Model Numbers

Parts

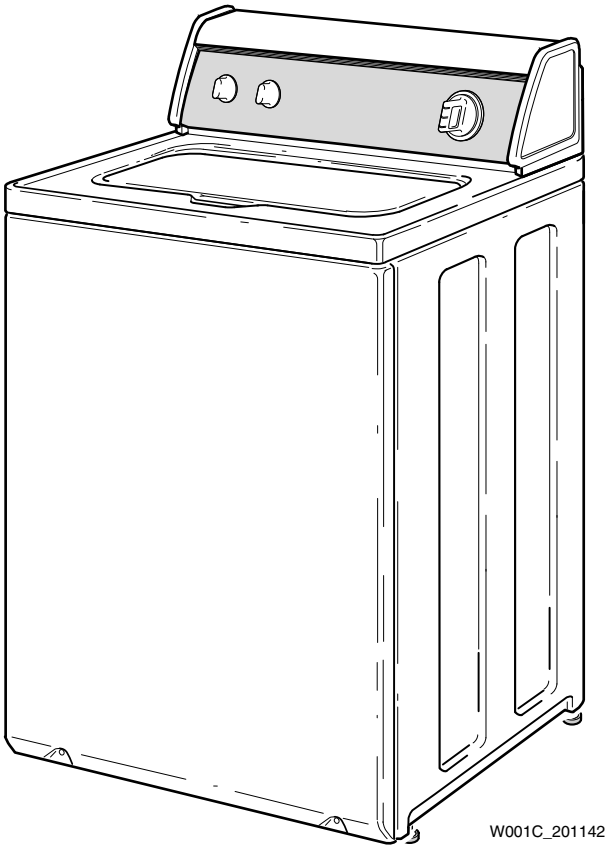

Alliance™ Laundry Systems

www.alliancelaundry.com

Part No. 201142R23
December 2019

Table of Contents

Title	Page
Parts Ordering Information	3
Serial Plate Location	3
Model Identification	5
Graphic Panel, Control Support Panel and Controls (Drawing 1 of 9)	6
Graphic Panel, Control Support Panel and Controls (Drawing 2 of 9)	8
Graphic Panel, Control Support Panel and Controls (Drawing 3 of 9)	10
Graphic Panel, Control Support Panel and Controls (Drawing 4 of 9)	12
Graphic Panel, Control Support Panel and Controls (Drawing 5 of 9)	14
Graphic Panel, Control Support Panel and Controls (Drawing 6 of 9)	16
Graphic Panel, Control Support Panel and Controls (Drawing 7 of 9)	18
Graphic Panel, Control Support Panel and Controls (Drawing 8 of 9)	20
Graphic Panel, Control Support Panel and Controls (Drawing 9 of 9)	22
Graphic Panel, Control Support Panel and Temperature Control	24
Control Support Panel and Controls (Drawing 1 of 2)	26
Control Support Panel and Controls (Drawing 2 of 2)	28
Graphic Panel and Control Knobs (Drawing 1 of 2)	30
Graphic Panel and Control Knobs (Drawing 2 of 2)	32
Lid Switch Assembly	34
Top, Lid and Lid Lock	36
Lid and Hood Back Panel	38
Top (Drawing 1 of 2)	40
Top (Drawing 2 of 2)	42
Fill Hose, Mixing Valve-to-Tub Cover Hose and Mixing Valve	44
Fill Hose, Mixing Valve-to-Tub Cover Hose and Mixing Valve	46
Fill Hose and Mixing Valve-to-Tub Cover Hose	48
Mixing Valve	50
Motor, Mounting Bracket, Belt, Pump and Idler Assembly	52
Motor and Mounting Bracket (Drawing 1 of 3)	54
Belt, Pump and Idler Assembly (Drawing 1 of 4)	56
Motor and Mounting Bracket (Drawing 2 of 3)	58
Belt, Pump and Idler Assembly (Drawing 2 of 4)	60
Belt, Pump and Idler Assembly (Drawing 3 of 4)	62
Motor and Mounting Bracket (Drawing 3 of 3)	64
Belt, Pump and Idler Assembly (Drawing 4 of 4)	66
Idler Lever and Belt Kit	68
Agitator, Drive Bell, Hub and Lip Seal Kit and Washtub	70
Agitator, Drive Bell, Hub and Seal Kit and Washtub	72
Agitator, Fabric Softener Dispenser, Drive Bell, Hub and Lip Seal Kit and Washtub (Drawing 1 of 2)	74
Agitator, Fabric Softener Dispenser, Drive Bell, Hub and Lip Seal Kit and Washtub (Drawing 2 of 2)	76
Agitator, Fabric Softener Dispenser, Drive Bell, Hub and Seal Kit and Washtub	78
Outer Tub, Cover, Bearing and Seal Housing, Pressure Hose and Counterweight (Drawing 1 of 2)	80

© Copyright 2019, Alliance Laundry Systems LLC

All rights reserved. No part of the contents of this book may be reproduced or transmitted in any form or by any means without the expressed written consent of the publisher.

Outer Tub, Cover, Bearing and Seal Housing, Pressure Hose and Counterweight (Drawing 2 of 2) 82
Outer Tub, Cover, Bearing Housing, Pressure Hose and Counterweight 84
Electric Drain Pump with Rubber Drain Hose and Siphon Break Kit 86
Electric Drain Pump with Plastic Drain Hose and Siphon Break Kit 88
Plastic Drain Hose and Siphon Break Kit 90
Weldment and Bearing Assembly, Brake and Pulley 92
Transmission Assembly (Drawing 1 of 2) 94
Transmission Assembly (Drawing 2 of 2) 96
Front Panel, Base Assembly and Cabinet Kit 98
Mixing Valve and Motor Connection Blocks, Terminals and Extractor Tool 100
Power Cord 102
Terminals and Clips 104
Terminals 106
Shipping Materials and Special Tools 108
Special Tools 110
Wire Harnesses and Wires (Drawing 1 of 3) 112
Wire Harnesses and Wires (Drawing 2 of 3) 114
Wire Harnesses and Wires (Drawing 3 of 3) 116
Parts Index 119

© Copyright, Alliance Laundry Systems LLC – DO NOT COPY or TRANSMIT

Parts Ordering Information

If literature or replacement parts are required, contact the source from whom the machine was purchased or contact Alliance Laundry Systems at (920) 748-3950 for the name and address of the nearest authorized parts distributor.

For technical assistance, call the numbers listed below:

(920) 748-3121 Ripon, Wisconsin

Serial Plate Location

When calling or writing about your product, be sure to mention model and serial numbers. Model and serial numbers are located on serial plate(s) as shown.

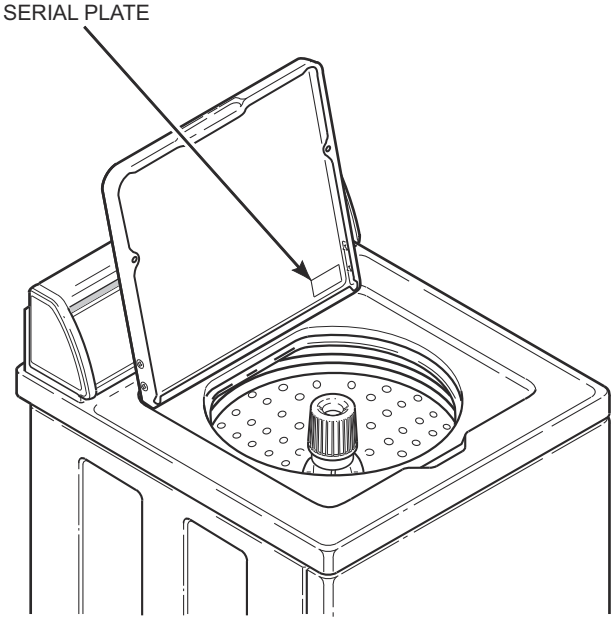

W429S_201142

© Copyright, Alliance Laundry Systems LLC – DO NOT COPY or TRANSMIT

Notes

© Copyright, Alliance Laundry Systems LLC – DO NOT COPY or TRANSMIT

Model Identification

Information in this manual is applicable to these washer models:

AWN552SN301AW01
AWN552SN301NW22
AWN552SN301NW29
AWNA62SN301AW01
AWZ17N*-1102
AWZ44N*-1102
AWZ45N*-1102
AWZ51N*-1102
AWZ52N*-1102
AWZ53N*-1102
CWN311SP111CW01
CWN412SP111CW01
DWN412SP111CW01
FWN311SP301NW10
FWN311SP301NW22
LWB19A*-1109
LWB19B*-1109
LWB19M*-1109
LWD51N*-1100
LWD52M*-1100
LWD52N*-1100
LWG74A*-3050
LWH16N*-3322
LWH18A*-3322
LWH18N*-3322
LWK23A*-3050
LWK24A*-3050
LWK24N*-3050
LWK73A*-3050
LWK74A*-3050
LWK74N*-3050
LWN311PP111NW22
LWN311SP101NW22
LWN311SP111NW22
LWN311SP111TW05
LWN311SP301NW22
LWN311SP331NW22
LWN311SP541NW23
LWN311SP541RW01
LWN311WP101NW22
LWN311WP111NW22
LWN311WP301NW22
LWN311WP331NW22
LWN311WP541NW23
LWN311WP541RW01
LWN312SP301AW01
LWN412SP111MW33

LWS01A*-1000
LWS01A*-1088
LWS01A*-3088
LWS01A*-3300
LWS01M*-1000
LWS01M*-1088
LWS01M*-3088
LWS01M*-3300
LWS01N*-3088
LWS01N*-3300
LWS02N*-1122
LWS11A*-3062
LWS11N*-3062
LWS16A*-1000
LWS16A*-3000
LWS16A*-3022
LWS16A*-3300
LWS16A*-3322
LWS16A*K
LWS16B*K
LWS16M*-1000
LWS16M*-3000
LWS16M*-3022
LWS16M*-3300
LWS16M*-3322
LWS16M*K
LWS16N*-1000
LWS16N*-1122
LWS16N*-3022
LWS16N*-3322
LWS16N*-5423
LWS16N*K
LWS17A*-1000
LWS17A*-3000
LWS17A*-3022
LWS17A*-3028
LWS17A*-3050
LWS17A*-3300
LWS17A*-3322
LWS17A*B3020
LWS17A*B3069
LWS17A*K
LWS17B*K

LWS17M*-1000
LWS17M*-1127
LWS17M*-3000
LWS17M*-3022
LWS17M*-3050
LWS17M*-3300
LWS17M*-3322
LWS17M*B3020
LWS17M*B3069
LWS17M*K
LWS17N*-1000
LWS17N*-1122
LWS17N*-1127
LWS17N*-3000
LWS17N*-3022
LWS17N*-3028
LWS17N*-3300
LWS17N*-3322
LWS17N*-5423
LWS17N*B3020
LWS17N*B3069
LWS17N*K
LWS21A*-3062
LWS21N*-3062
LWS42M*-3050
LWS42N*-3050
LWS45M*-1127
LWS45N*-1127
LWS45N*-1130
LWS52N*-1127
LWT42N*-1100
LWT52N*-1100
LWY17A*-1109
LWY17B*-1109
LWY17M*-1109
LWY45A*-1109
LWY45B*-1109
LWY45M*-1109

LWZ01M*-1102
LWZ01N*-1102
LWZ02N*-1102
LWZ16A*-1000
LWZ16M*-1000
LWZ16N*-1000
LWZ17A*-3000
LWZ17A*B3020
LWZ17A*B3069
LWZ17M*-3000
LWZ17M*B3020
LWZ17M*B3069
LWZ17N*-3022
LWZ17N*B3020
LWZ17N*B3069
LWZ20M*-3300
LWZ20N*-3300
LWZ22M*-1102
LWZ22N*-1102
LWZ42M*-1102
LWZ42N*-1102
LWZ52M*-1102
LWZ52N*-1102
LWZ77M*-1102
LWZ77N*-1102
MWN311SP111TW06
TWN311SP301NW22
YWN311PP111CW01
YWN321SP541RW01
ZWN311SP111CW01
ZWN402PP111CW01
ZWN412SP111CW01
ZWN432SP111CW01

*** Add Letter To Designate Color. L - Almond Q - Bisque W - White**

© Copyright, Alliance Laundry Systems LLC – DO NOT COPY or TRANSMIT

Graphic Panel, Control Support Panel and Controls (Drawing 1 of 9)

Models LWN311PP111NW22, LWS01A*-1000, LWS01A*-1088, LWS01A*-3088, LWS01A*-3300, LWS01M*-1088, LWS01M*-3088, LWS01M*-3300, LWS01N*-3088, LWS01N*-3300, LWS02N*-1122, LWZ01M*-1102, LWZ01N*-1102, LWZ02N*-1102 and YWN311PP111CW01

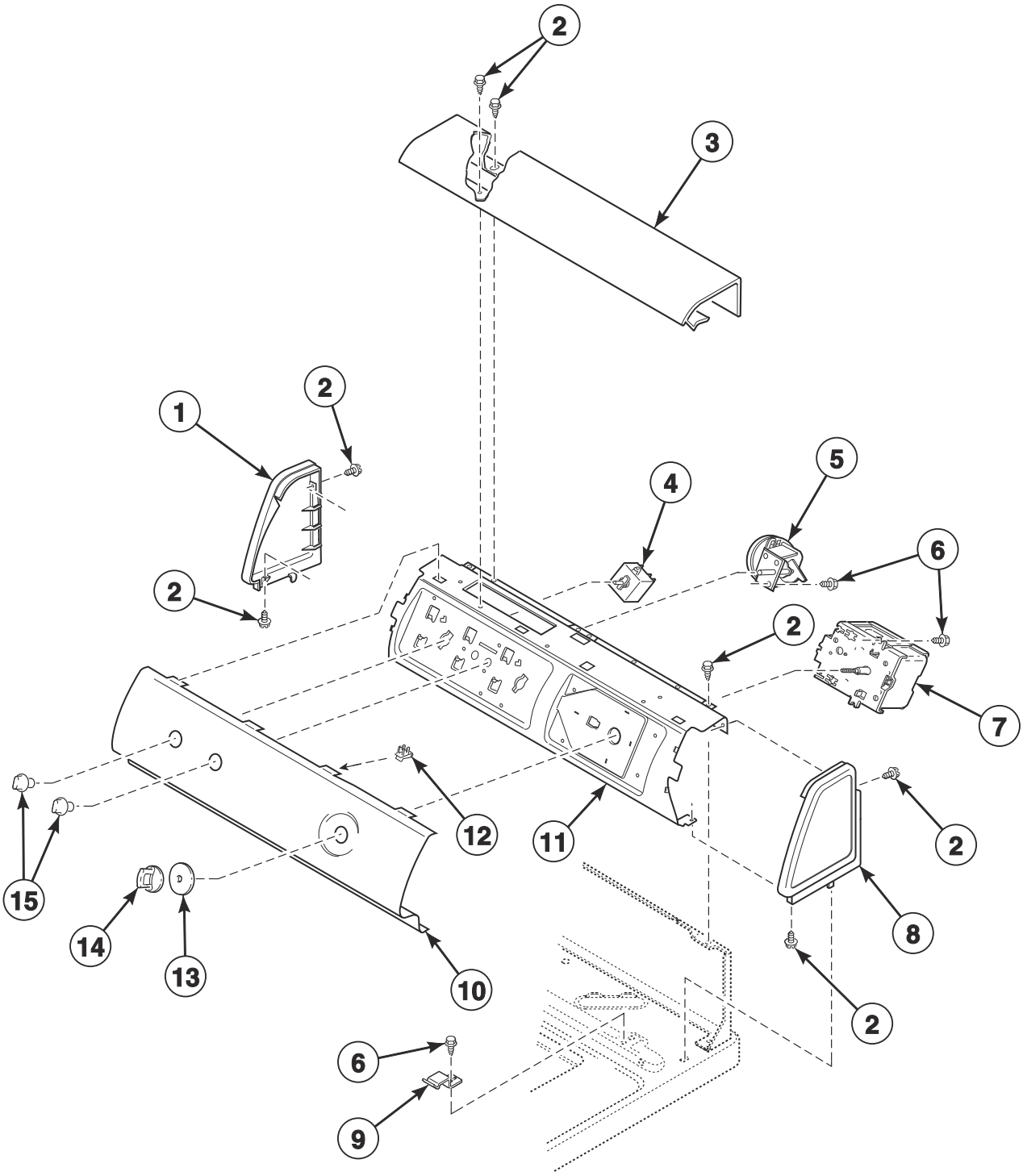

W320P_201142

© Copyright, Alliance Laundry Systems LLC – DO NOT COPY or TRANSMIT

Graphic Panel, Control Support Panel and Controls (Drawing 1 of 9)

REF	PART NO.	DESCRIPTION	COMMENTS
1	D504009WP	End Panel	White; Left
	N/A	End Panel	Almond; Left
	D504009QP	End Panel	Bisque; Left
2	D501086	Screw	
3	39905W	Top Cover	White
	N/A	Top Cover	Almond
	39905Q	Top Cover	Bisque
4	36335	Temperature Switch	4 position; Models LWZ01M*-1102 and LWZ01N*-1102
	35115	Temperature Switch	3 position; All other models
5	201927P	Pressure Switch	Models LWS02N*-1122 and LWZ02N*-1102
	201609P	Pressure Switch	Models LWN311PP111NW22 and YWN311PP111CW01
	39035P	Pressure Switch	All other models
6	23962	Screw	
7	200885P	Timer	Models LWS01A*-3088, LWS01M*-3088 and LWS01N*-3088
	37930P	Timer	Models LWS01A*-3300, LWS01M*-3300 and LWS01N*-3300
	200927P	Timer	All other models
8	D504008WP	End Panel	White; Right
	D504008L	End Panel	Almond; Right
	D504008QP	End Panel	Bisque; Right
9	35358	Hold-Down Clip	
10	200668	Graphic Panel	Models LWZ01M*-1102 and LWZ01N*-1102
	201842W	Graphic Panel	Model LWZ02N*-1102
	202236W	Control Panel	Model LWN311PP111NW22
	202238W	Control Panel	Model YWN311PP111CW01
	38887W	Graphic Panel	White; All other models
	38887Q	Graphic Panel	Bisque; All other models
11	38171	Control Support Panel	
12	00161	Grounding Clip	
13	N/A	Timer Skirt Assembly	White; Models LWS01A*-1000, LWS01A*-1088, LWS01A*-3088 and LWS01A*-3300
	36700W	Timer Skirt Assembly	White; All other models
	N/A	Timer Skirt Assembly	Almond; All other models
	36700Q	Timer Skirt Assembly	Bisque; All other models
14	N/A	Timer Knob	White; Models LWS01A*-1000, LWS01A*-1088, LWS01A*-3088 and LWS01A*-3300
	201501W	Timer Knob	White; All other models
	201501Q	Timer Knob	Bisque; All other models
15	33688	Knob Assembly	White; Models LWS01A*-1000, LWS01A*-1088, LWS01A*-3088 and LWS01A*-3300
	36701W	Knob Assembly	White; All other models
	36701L	Knob Assembly	Almond; All other models
	36701Q	Knob Assembly	Bisque; All other models

*** Add Letter To Designate Color. L - Almond Q - Bisque W - White**

N/A = Part no longer available

© Copyright, Alliance Laundry Systems LLC – DO NOT COPY or TRANSMIT

Graphic Panel, Control Support Panel and Controls (Drawing 2 of 9)

Models LWN311WP101NW22, LWN311WP111NW22, LWN311WP301NW22, LWN311WP331NW22, LWN311WP541NW23, LWN311WP541RW01, LWS16A*-1000, LWS16A*-3000, LWS16A*-3022, LWS16A*-3300, LWS16A*-3322, LWS16A*K, LWS16B*K, LWS16M*-1000, LWS16M*-3000, LWS16M*-3022, LWS16M*-3300, LWS16M*-3322, LWS16M*K, LWS16N*-1000, LWS16N*-1122, LWS16N*-3022, LWS16N*-3322, LWS16N*-5423, LWS16N*K, LWZ16A*-1000, LWZ16M*-1000, LWZ16N*-1000, LWZ22M*-1102 and LWZ22N*-1102

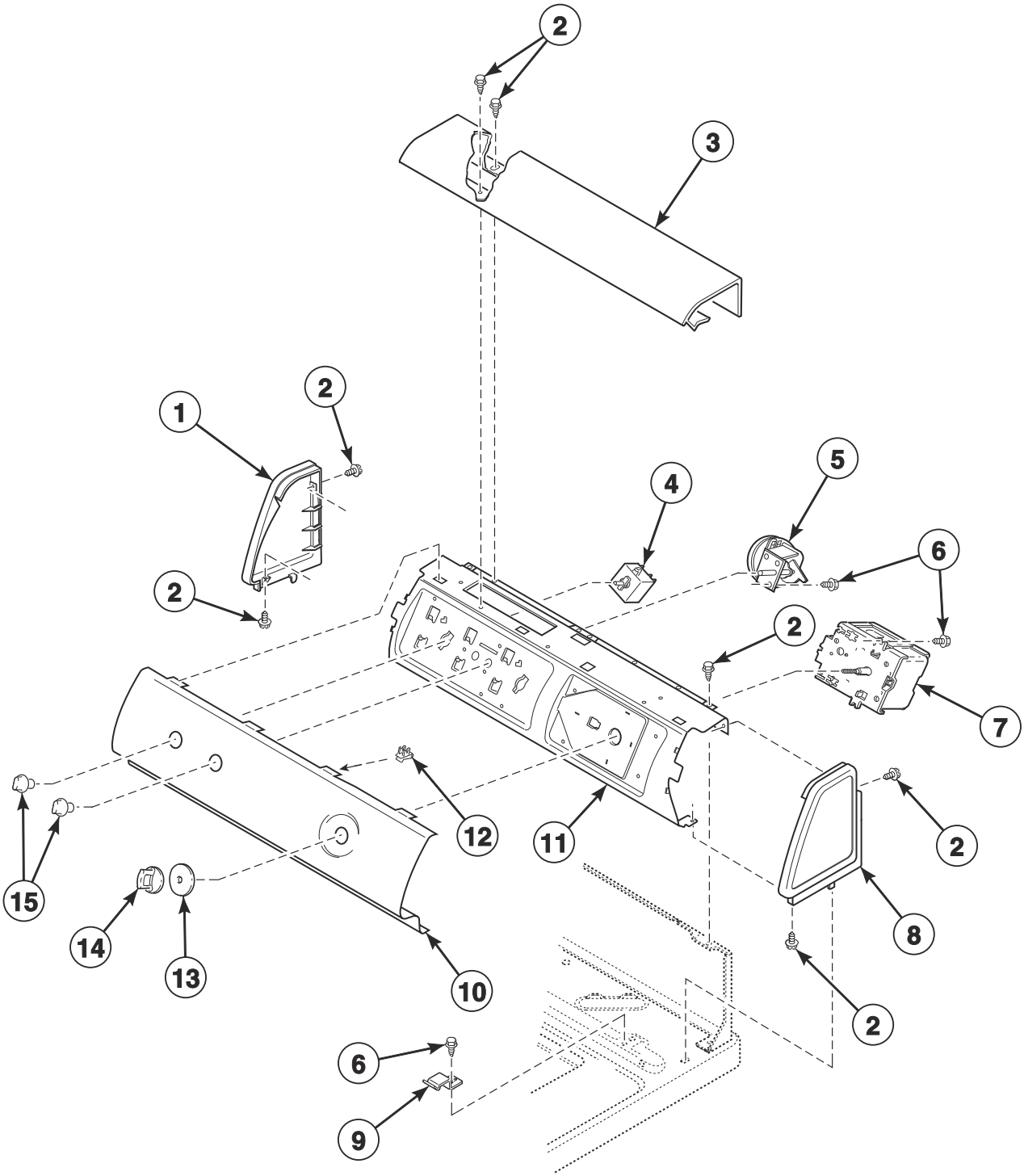

W320P_201142

© Copyright, Alliance Laundry Systems LLC – DO NOT COPY or TRANSMIT

Graphic Panel, Control Support Panel and Controls (Drawing 2 of 9)

REF	PART NO.	DESCRIPTION	COMMENTS
1	D504009WP	End Panel	White; Left
	N/A	End Panel	Almond; Left
	D504009QP	End Panel	Bisque; Left
2	D501086	Screw	
3	39905W	Top Cover	White
	N/A	Top Cover	Almond
	39905Q	Top Cover	Bisque
4	36335	Temperature Switch	4 position; Models LWZ22M*-1102 and LWZ22N*-1102
	35115	Temperature Switch	3 position; All other models
5	201609P	Pressure Switch	Models LWN311WP101NW22, LWN311WP111NW22, LWN311WP301NW22, LWN311WP331NW22 and LWN311WP541NW23
	39286P	Pressure Switch	Model LWN311WP541RW01
	201927P	Pressure Switch	All other models
6	23962	Screw	
7	37929P	Timer	Models LWZ22M*-1102 and LWZ22N*-1102
	37930P	Timer	Models LWN311WP331NW22, LWN311WP541NW23, LWN311WP541RW01, LWS16A*-3300, LWS16A*-3322, LWS16M*-3300, LWS16M*-3322, LWS16N*-3322 and LWS16N*-5423
	200885P	Timer	Models LWN311WP301NW22, LWS16A*-3000, LWS16A*-3022, LWS16M*-3000, LWS16M*-3022 and LWS16N*-3022
	200927P	Timer	Models LWN311WP111NW22, LWS16A*K, LWS16B*K, LWS16M*K, LWS16N*-1122 and LWS16N*K
	37928P	Timer	All other models
8	D504008WP	End Panel	White; Right
	D504008L	End Panel	Almond; Right
	D504008QP	End Panel	Bisque; Right
9	35358	Hold-Down Clip	
10	38939W	Graphic Panel	Models LWZ16A*-1000, LWZ16M*-1000 and LWZ16N*-1000
	N/A	Graphic Panel	Models LWS16A*K, LWS16B*K, LWS16M*K and LWS16N*K
	200668	Graphic Panel	Models LWZ22M*-1102 and LWZ22N*-1102
	202236W	Control Panel	Models LWN311WP101NW22, LWN311WP111NW22, LWN311WP301NW22, LWN311WP331NW22 and LWN311WP541NW23
	38887W	Graphic Panel	White; All other models
	38887Q	Graphic Panel	Bisque; All other models
11	38171	Control Support Panel	
12	00161	Grounding Clip	
13	N/A	Timer Skirt Assembly	Models LWS16A*-1000, LWS16A*-3000, LWS16A*-3022, LWS16A*-3300, LWS16A*-3322 and LWZ16A*-1000
	36700W	Timer Skirt Assembly	White; All other models
	N/A	Timer Skirt Assembly	Almond; All other models
	36700Q	Timer Skirt Assembly	Bisque; All other models
14	N/A	Timer Knob	Models LWS16A*-1000, LWS16A*-3000, LWS16A*-3022, LWS16A*-3300, LWS16A*-3322 and LWZ16A*-1000
	201501W	Timer Knob	White; All other models
	201501Q	Timer Knob	Bisque; All other models
15	33688	Knob Assembly	Models LWS16A*-1000, LWS16A*-3000, LWS16A*-3022, LWS16A*-3300, LWS16A*-3322 and LWZ16A*-1000
	36701W	Knob Assembly	White; All other models
	36701L	Knob Assembly	Almond; All other models
	36701Q	Knob Assembly	Bisque; All other models

*** Add Letter To Designate Color. L - Almond Q - Bisque W - White**

N/A = Part no longer available

© Copyright, Alliance Laundry Systems LLC – DO NOT COPY or TRANSMIT

Graphic Panel, Control Support Panel and Controls (Drawing 3 of 9)

Models AWZ44N*-1102, AWZ45N*-1102, CWN412SP111CW01, LWB19A*-1109, LWB19B*-1109, LWB19M*-1109, LWS45M*-1127, LWS45N*-1127, LWS45N*-1130, LWT42N*-1100, LWY17A*-1109, LWY17B*-1109, LWY45A*-1109, LWY45B*-1109, LWY45M*-1109, LWZ42M*-1102, LWZ42N*-1102, ZWN402PP111CW01 and ZWN412SP111CW01

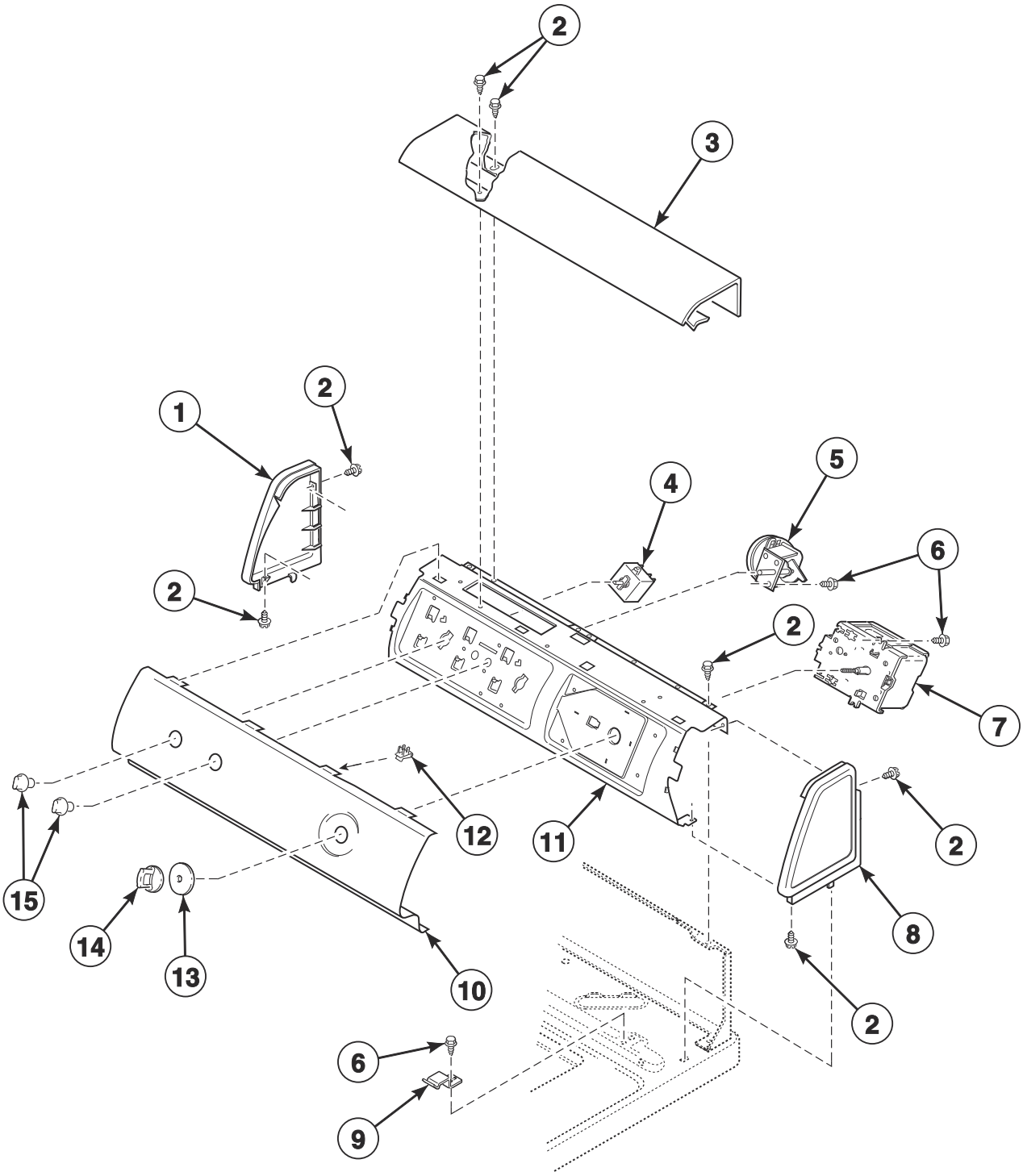

W320P_201142

© Copyright, Alliance Laundry Systems LLC – DO NOT COPY or TRANSMIT

Graphic Panel, Control Support Panel and Controls (Drawing 3 of 9)

REF	PART NO.	DESCRIPTION	COMMENTS
1	D504009WP	End Panel	White; Left
	N/A	End Panel	Almond; Left
	D504009QP	End Panel	Bisque; Left
2	D501086	Screw	
3	39905W	Top Cover	White
	N/A	Top Cover	Almond
	39905Q	Top Cover	Bisque
4	36335	Temperature Switch	4 position; Models AWZ45N*-1102, LWS45M*-1127, LWS45N*-1127, LWS45N*-1130, LWT42N*-1100, LWY45A*-1109, LWY45B*-1109, LWY45M*-1109, LWZ42M*-1102 and LWZ42N*-1102
	35115	Temperature Switch	3 position; All other models
5	201609P	Pressure Switch	Models ZWN402PP111CW01 and ZWN412SP111CW01; Model CWN412SP111CW01 starting Serial Nos. beginning 1101
	201927P	Pressure Switch	All other models
6	23962	Screw	
7	37929P	Timer	Models LWB19A*-1109, LWB19B*-1109, LWB19M*-1109, LWT42N*-1100, LWZ42M*-1102 and LWZ42N*-1102
	200927P	Timer	Models LWY17A*-1109 and LWY17B*-1109
	37927P	Timer	All other models
8	D504008WP	End Panel	White; Right
	D504008L	End Panel	Almond; Right
	D504008QP	End Panel	Bisque; Right
9	35358	Hold-Down Clip	
10	N/A	Graphic Panel	Models LWB19A*-1109, LWB19B*-1109, LWB19M*-1109, LWY17A*-1109 and LWY17B*-1109
	N/A	Graphic Panel	Models LWY45A*-1109, LWY45B*-1109 and LWY45M*-1109
	200668	Graphic Panel	Models LWZ42M*-1102 and LWZ42N*-1102
	39478W	Graphic Panel	Models LWS45M*-1127, LWS45N*-1127 and LWS45N*-1130
	201211	Graphic Panel	Model LWT42N*-1100
	201512W	Graphic Panel	Model AWZ45N*-1102
	201818W	Graphic Panel	Model AWZ44N*-1102
	201425W	Graphic Panel	Model CWN412SP111CW01 through Serial Nos. beginning 1012
	202240W	Graphic Panel	Model CWN412SP111CW01 starting Serial Nos. beginning 1101
	202113W	Control Panel	Models ZWN402PP111CW01 and ZWN412SP111CW01
11	38171	Control Support Panel	
12	00161	Grounding Clip	
13	803116	Timer Skirt Assembly	Models ZWN402PP111CW01 and ZWN412SP111CW01
	N/A	Timer Skirt Assembly	Models LWB19A*-1109, LWY17A*-1109 and LWY45A*-1109
	36700W	Timer Skirt Assembly	White; All other models
	N/A	Timer Skirt Assembly	Almond; All other models
	36700Q	Timer Skirt Assembly	Bisque; All other models
14	202133	Timer Knob Assembly	Models ZWN402PP111CW01 and ZWN412SP111CW01
	N/A	Timer Knob	Models LWB19A*-1109, LWY17A*-1109 and LWY45A*-1109
	201501W	Timer Knob	White; All other models
	201501Q	Timer Knob	Bisque; All other models
15	803119P	Control Knob Assembly	Models ZWN402PP111CW01 and ZWN412SP111CW01
	33688	Knob Assembly	Models LWB19A*-1109, LWY17A*-1109 and LWY45A*-1109
	36701W	Knob Assembly	White; All other models
	36701L	Knob Assembly	Almond; All other models
	36701Q	Knob Assembly	Bisque; All other models

*** Add Letter To Designate Color. L - Almond Q - Bisque W - White**

N/A = Part no longer available

© Copyright, Alliance Laundry Systems LLC – DO NOT COPY or TRANSMIT

Graphic Panel, Control Support Panel and Controls (Drawing 4 of 9)

Models LWS17M*B3020, LWS17N*B3020, LWZ17M*B3020 and LWZ17N*B3020

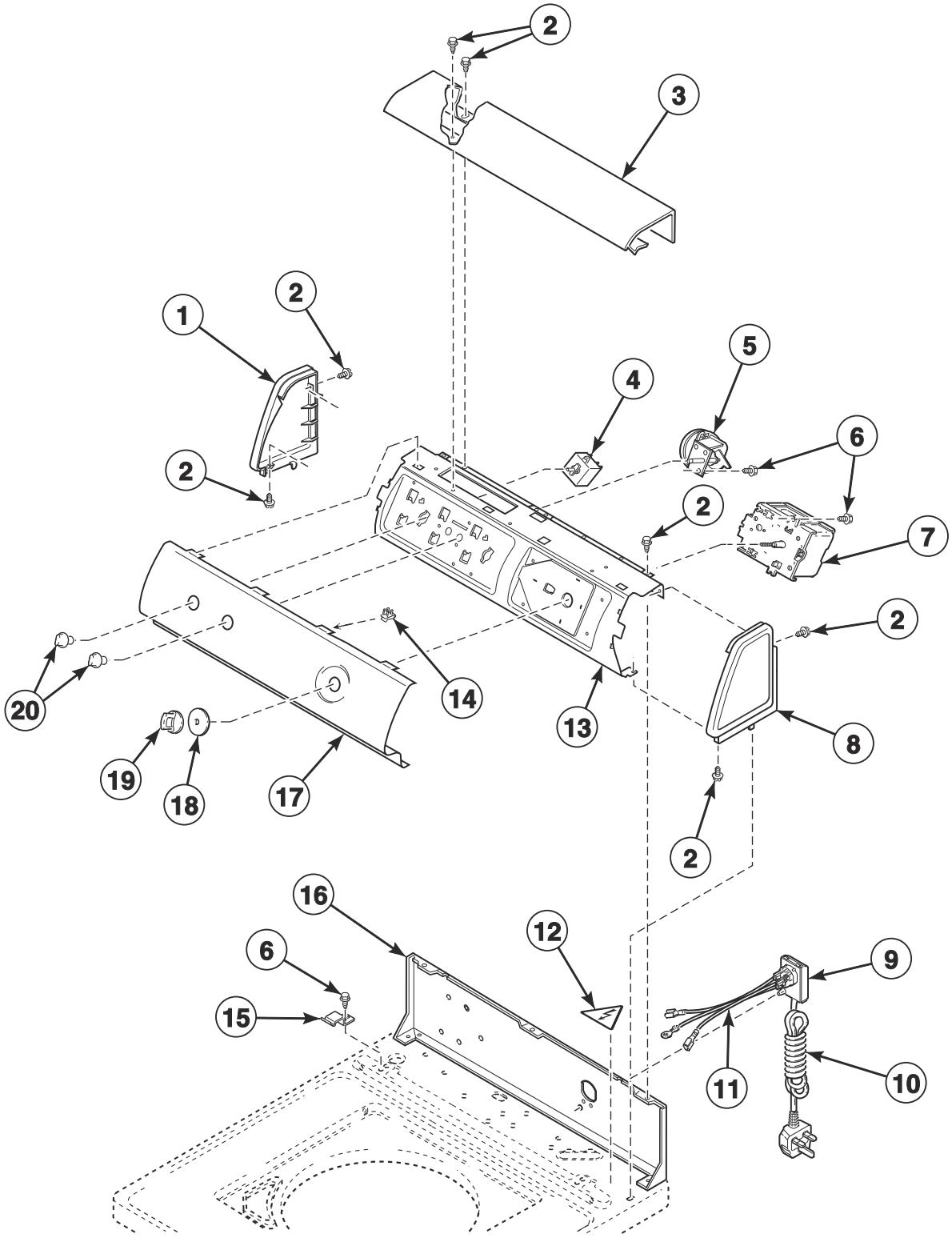

© Copyright, Alliance Laundry Systems LLC – DO NOT COPY or TRANSMIT

Graphic Panel, Control Support Panel and Controls (Drawing 4 of 9)

REF	PART NO.	DESCRIPTION	COMMENTS
1	D504009WP	End Panel	White; Left
	N/A	End Panel	Almond; Left
	D504009QP	End Panel	Bisque; Left
2	D501086	Screw	
3	39905W	Top Cover	White
	N/A	Top Cover	Almond
	39905Q	Top Cover	Bisque
4	35115	Temperature Switch	3 position
5	39286P	Pressure Switch	
6	23962	Screw	
7	200885P	Timer	
8	D504008WP	End Panel	White; Right
	D504008L	End Panel	Almond; Right
	D504008QP	End Panel	Bisque; Right
9	39922	Cable Connection Box	Models starting Serial No. 0204008036
10	39926	Lead-In Cord	Models starting Serial No. 0204008036
11	39923	Lead-In Wire Harness Assembly	Models starting Serial No. 0204008036
12	D502511	Electrical Shock Label	Models starting Serial No. 0204008036
13	38171	Control Support Panel	
14	00161	Grounding Clip	
15	35358	Hold-Down Clip	
16	39921	Hood Back Panel	Models starting Serial No. 0204008036
17	N/A	Graphic Panel	
18	36700W	Timer Skirt Assembly	White
	N/A	Timer Skirt Assembly	Almond
	36700Q	Timer Skirt Assembly	Bisque
19	201501W	Timer Knob	White
	201501Q	Timer Knob	Bisque
20	36701W	Knob Assembly	White
	36701L	Knob Assembly	Almond
	36701Q	Knob Assembly	Bisque

*** Add Letter To Designate Color. L - Almond Q - Bisque W - White**

N/A = Part no longer available

© Copyright, Alliance Laundry Systems LLC – DO NOT COPY or TRANSMIT

Graphic Panel, Control Support Panel and Controls (Drawing 5 of 9)

Models AWZ51N*-1102, AWZ52N*-1102, DWN412SP111CW01, LWD51N*-1100, LWD52M*-1100, LWD52N*-1100, LWS52N*-1127, LWT52N*-1100, LWZ52M*-1102, LWZ52N*-1102, LWZ77M*-1102, LWZ77N*-1102 and ZWN432SP111CW01

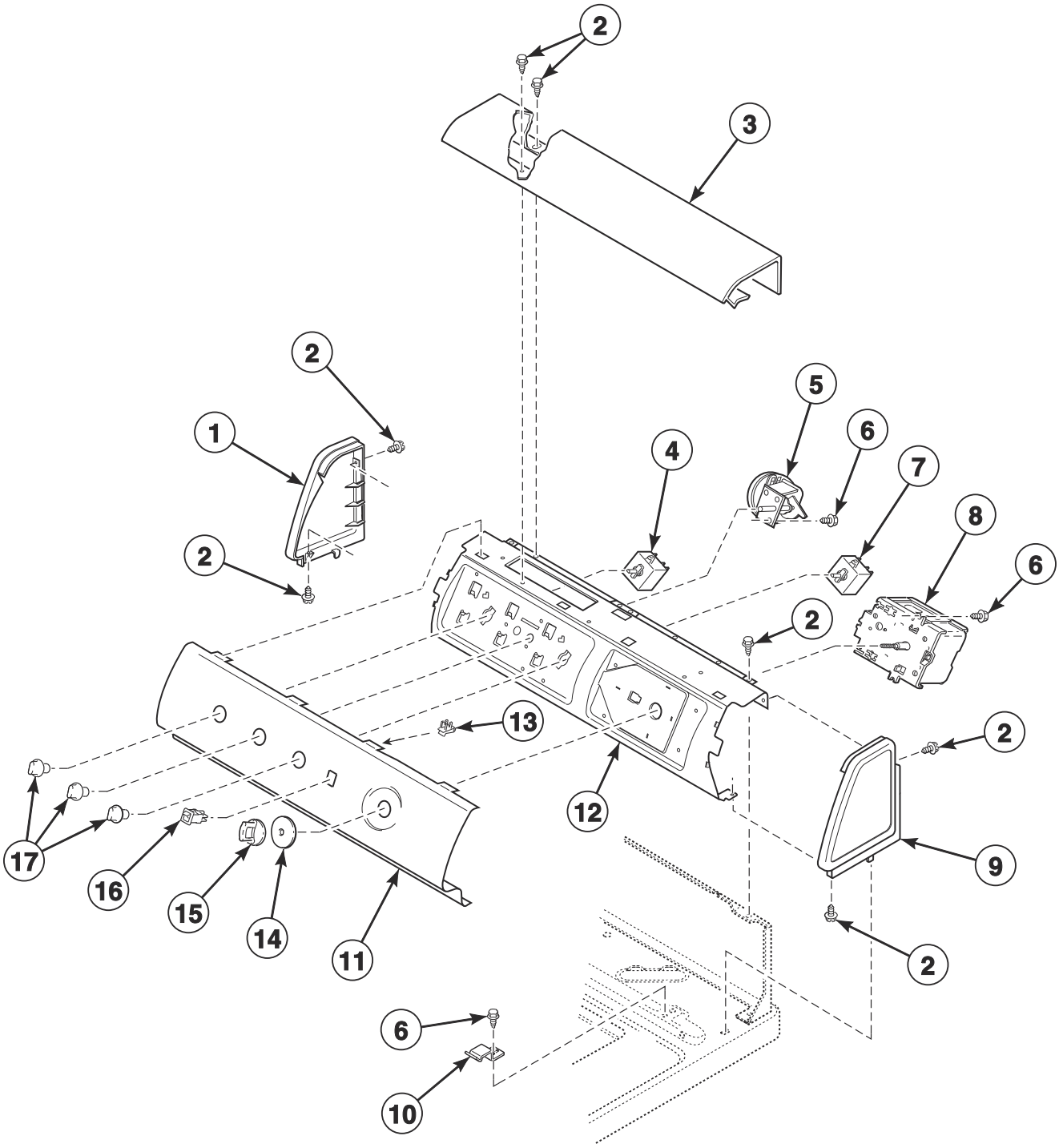

© Copyright, Alliance Laundry Systems LLC – DO NOT COPY or TRANSMIT

Graphic Panel, Control Support Panel and Controls (Drawing 5 of 9)

REF	PART NO.	DESCRIPTION	COMMENTS
1	D504009WP	End Panel	White; Left
	D504009QP	End Panel	Bisque; Left
2	D501086	Screw	
3	39905W	Top Cover	White
	39905Q	Top Cover	Bisque
4	35115	Temperature Switch	3 position; Models AWZ51N*-1102, DWN412SP111CW01, LWD51N*-1100 and ZWN432SP111CW01
	36335	Temperature Switch	4 position; All other models
5	201609P	Pressure Switch	Models DWN412SP111CW01 and ZWN432SP111CW01
	201927P	Pressure Switch	All other models
6	23962	Screw	
7	35118	Speed Switch	Models LWZ77M*-1102 and LWZ77N*-1102
8	37922P	Timer	Models LWZ77M*-1102 and LWZ77N*-1102
	38881P	Timer	All other models
9	D504008WP	End Panel	White; Right
	D504008L	End Panel	Almond; Right
	D504008QP	End Panel	Bisque; Right
10	35358	Hold-Down Clip	
11	200665	Graphic Panel	Models LWZ77M*-1102 and LWZ77N*-1102
	200666	Graphic Panel	Models LWZ52M*-1102 and LWZ52N*-1102
	201148	Graphic Panel	Models LWD52M*-1100 and LWD52N*-1100
	201196	Graphic Panel	Model LWT52N*-1100
	201275Q	Graphic Panel	Model LWS52N*-1127
	201514W	Graphic Panel	Model AWZ52N*-1102
	201844W	Graphic Panel	Model AWZ51N*-1102
	201848W	Graphic Panel	Model LWD51N*-1100
	202239W	Graphic Panel	Model DWN412SP111CW01
	202078W	Control Panel	Model ZWN432SP111CW01
12	38171	Control Support Panel	
13	00161	Grounding Clip	
14	803116	Timer Skirt Assembly	Model ZWN432SP111CW01
	36700W	Timer Skirt Assembly	White; All other models
	36700Q	Timer Skirt Assembly	Bisque; All other models
15	202133	Timer Knob Assembly	Model ZWN432SP111CW01
	201501W	Timer Knob	White; All other models
	201501Q	Timer Knob	Bisque; All other models
16	38424W	Rocker Switch	White
	38424L	Rocker Switch	Almond
	38424Q	Rocker Switch	Bisque
17	803119P	Control Knob Assembly	Model ZWN432SP111CW01
	36701W	Knob Assembly	White; Models AWZ51N*-1102, AWZ52N*-1102, DWN412SP111CW01, LWD51N*-1100, LWD52M*-1100, LWD52N*-1100, LWS52N*-1127, LWT52N*-1100, LWZ52M*-1102 and LWZ52N*-1102 2 used; Models LWZ77M*-1102 and LWZ77N*-1102 3 used
	36701L	Knob Assembly	Almond; Models AWZ51N*-1102, AWZ52N*-1102, DWN412SP111CW01, LWD51N*-1100, LWD52M*-1100, LWD52N*-1100, LWS52N*-1127, LWT52N*-1100, LWZ52M*-1102 and LWZ52N*-1102 2 used; Models LWZ77M*-1102 and LWZ77N*-1102 3 used
	36701Q	Knob Assembly	Bisque; Models AWZ51N*-1102, AWZ52N*-1102, DWN412SP111CW01, LWD51N*-1100, LWD52M*-1100, LWD52N*-1100, LWS52N*-1127, LWT52N*-1100, LWZ52M*-1102 and LWZ52N*-1102 2 used; Models LWZ77M*-1102 and LWZ77N*-1102 3 used

*** Add Letter To Designate Color. L - Almond Q - Bisque W - White**

© Copyright, Alliance Laundry Systems LLC – DO NOT COPY or TRANSMIT

Graphic Panel, Control Support Panel and Controls (Drawing 6 of 9)

Models LWS17A*B3069, LWS17M*B3069, LWZ17A*B3069 and LWZ17M*B3069
Models Through Serial No. 00061999

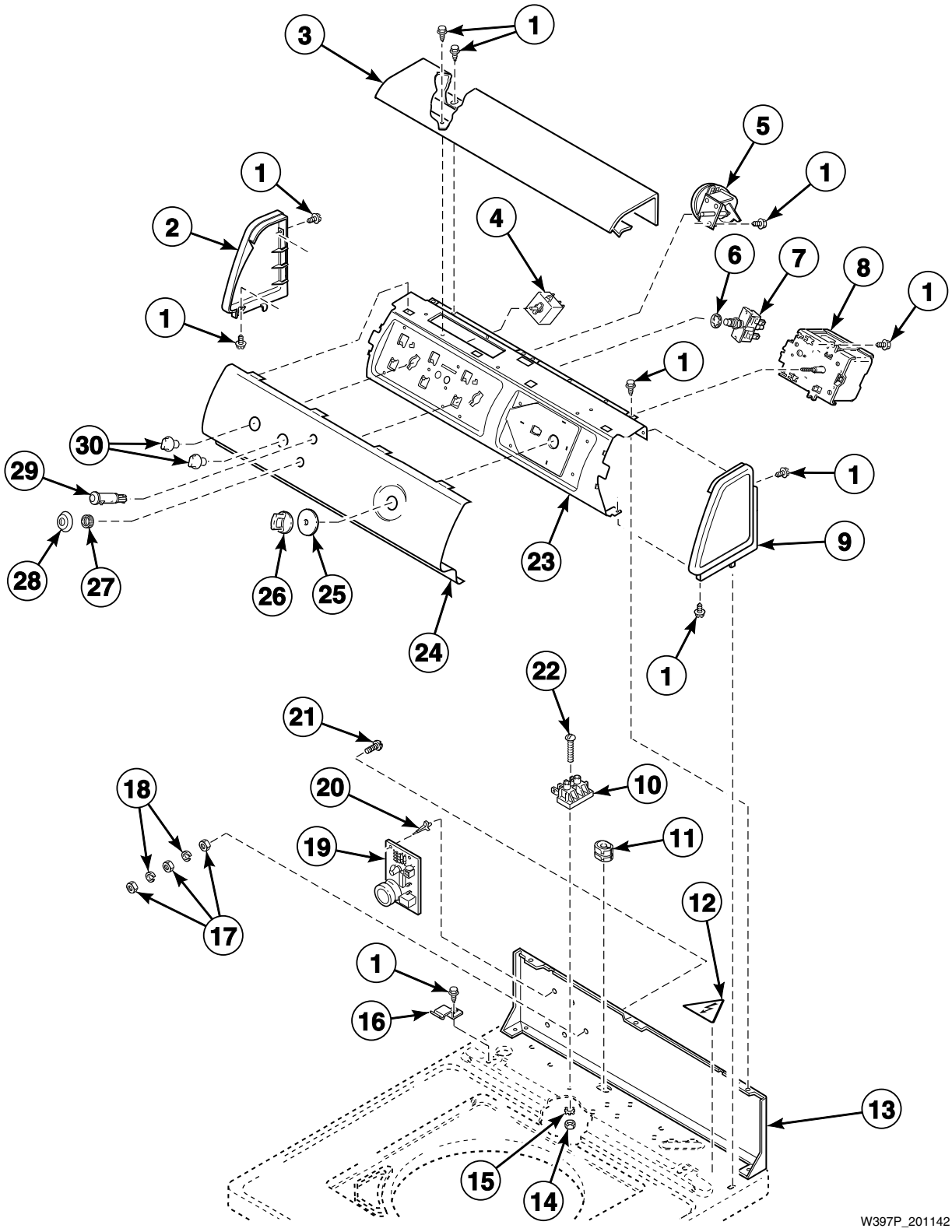

© Copyright, Alliance Laundry Systems LLC – DO NOT COPY or TRANSMIT

Graphic Panel, Control Support Panel and Controls (Drawing 6 of 9)

REF	PART NO.	DESCRIPTION	COMMENTS
1	23962	Screw	
2	D504009WP	End Panel	White; Left
	N/A	End Panel	Almond; Left
	D504009QP	End Panel	Bisque; Left
3	39905W	Top Cover	White
	N/A	Top Cover	Almond
	39905Q	Top Cover	Bisque
4	35115	Temperature Switch	3 position
5	39286P	Pressure Switch	
6	25820	Washer	
7	55882	Switch Assembly	
8	200885P	Timer	
9	D504008WP	End Panel	White; Right
	D504008L	End Panel	Almond; Right
	D504008QP	End Panel	Bisque; Right
10	36841	Terminal Block	
11	N/A	Strain Relief	
12	D502511	Electrical Shock Label	
13	37782	Hood Back Panel	
14	02788	Nut	
15	21734	Washer	
16	35358	Hold-Down Clip	
17	28447	Nut	
18	28449	Washer	
19	37225P	Control Lid Lock Assembly	
20	D501523	Circuit Board Support	
21	28448	Screw	
22	Q6516	Screw	
23	38171	Control Support Panel	
24	39082W	Graphic Panel	Models LWS17A*B3069 and LWS17M*B3069
	N/A	Graphic Panel	Models LWZ17A*B3069 and LWZ17M*B3069
25	N/A	Timer Skirt Assembly	Models LWS17A*B3069 and LWZ17A*B3069
	36700W	Timer Skirt Assembly	White; Models LWS17M*B3069 and LWZ17M*B3069
	N/A	Timer Skirt Assembly	Almond; Models LWS17M*B3069 and LWZ17M*B3069
	36700Q	Timer Skirt Assembly	Bisque; Models LWS17M*B3069 and LWZ17M*B3069
26	N/A	Timer Knob	Models LWS17A*B3069 and LWZ17A*B3069
	201501W	Timer Knob	White; Models LWS17M*B3069 and LWZ17M*B3069
	201501Q	Timer Knob	Bisque; Models LWS17M*B3069 and LWZ17M*B3069
27	N/A	Nut	
28	N/A	Switch Collar	
29	39536	Lid Switch Indicator Light	
30	33688	Knob Assembly	Models LWS17A*B3069 and LWZ17A*B3069
	36701W	Knob Assembly	White; Models LWS17M*B3069 and LWZ17M*B3069
	36701L	Knob Assembly	Almond; Models LWS17M*B3069 and LWZ17M*B3069
	36701Q	Knob Assembly	Bisque; Models LWS17M*B3069 and LWZ17M*B3069

*** Add Letter To Designate Color. L - Almond Q - Bisque W - White**

N/A = Part no longer available

© Copyright, Alliance Laundry Systems LLC – DO NOT COPY or TRANSMIT

Graphic Panel, Control Support Panel and Controls (Drawing 7 of 9)

Models LWS17A*B3069, LWS17M*B3069, LWZ17A*B3069 and LWZ17M*B3069
Models Starting Serial No. 00062000

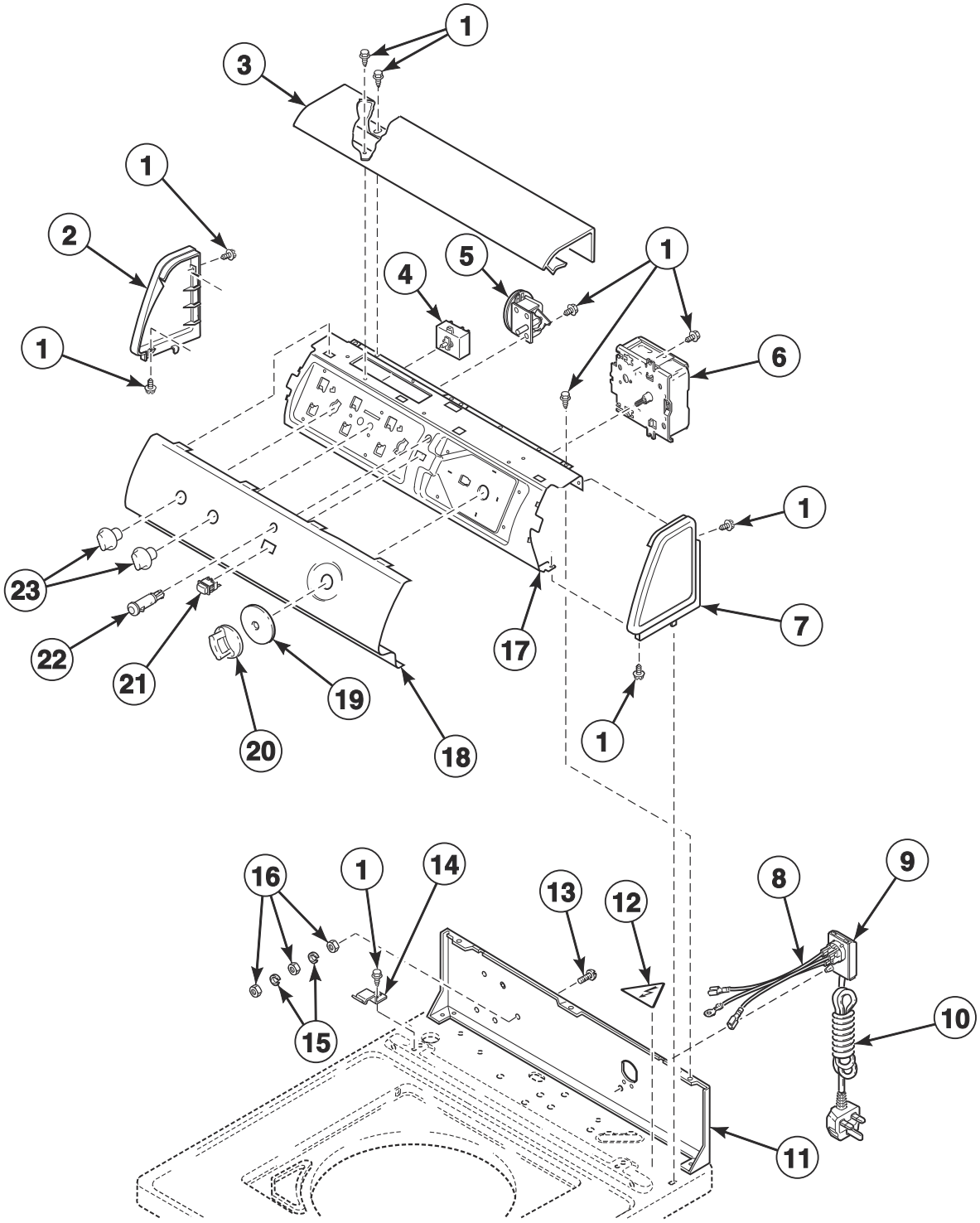

TLW1310PA_201142

© Copyright, Alliance Laundry Systems LLC – DO NOT COPY or TRANSMIT

Graphic Panel, Control Support Panel and Controls (Drawing 7 of 9)

REF	PART NO.	DESCRIPTION	COMMENTS
1	23962	Screw	
2	D504009WP	End Panel	White; Left
	N/A	End Panel	Almond; Left
	D504009QP	End Panel	Bisque; Left
3	39905W	Top Cover	White
	N/A	Top Cover	Almond
	39905Q	Top Cover	Bisque
4	35115	Temperature Switch	3 position
5	39286P	Pressure Switch	
6	200885P	Timer	
7	D504008WP	End Panel	White; Right
	D504008L	End Panel	Almond; Right
	D504008QP	End Panel	Bisque; Right
8	39923	Lead-In Wire Harness Assembly	
9	39922	Cable Connection Box	
10	39925	Power Cord Assembly	
11	39921	Hood Back Panel	
12	D502511	Electrical Shock Label	
13	28448	Screw	
14	35358	Hold-Down Clip	
15	28449	Washer	
16	28447	Nut	
17	38171	Control Support Panel	
18	200680W	Graphic Panel	Models LWS17A*B3069 and LWS17M*B3069
	200679W	Graphic Panel	All other models
19	N/A	Timer Skirt Assembly	Models LWS17A*B3069 and LWZ17A*B3069
	36700W	Timer Skirt Assembly	White; All other models
	N/A	Timer Skirt Assembly	Almond; All other models
	36700Q	Timer Skirt Assembly	Bisque; All other models
20	N/A	Timer Knob	Models LWS17A*B3069 and LWZ17A*B3069
	201501W	Timer Knob	White; All other models
	201501Q	Timer Knob	Bisque; All other models
21	801434W	Push-to-Start Switch	White
	801434Q	Push-to-Start Switch	Bisque
22	39536	Lid Switch Indicator Light	
23	33688	Knob Assembly	Models LWS17A*B3069 and LWZ17A*B3069
	36701W	Knob Assembly	White; All other models
	36701L	Knob Assembly	Almond; All other models
	36701Q	Knob Assembly	Bisque; All other models

*** Add Letter To Designate Color. L - Almond Q - Bisque W - White**
N/A = Part no longer available

© Copyright, Alliance Laundry Systems LLC – DO NOT COPY or TRANSMIT

Graphic Panel, Control Support Panel and Controls (Drawing 8 of 9)

Models LWS17N*B3069 and LWZ17N*B3069

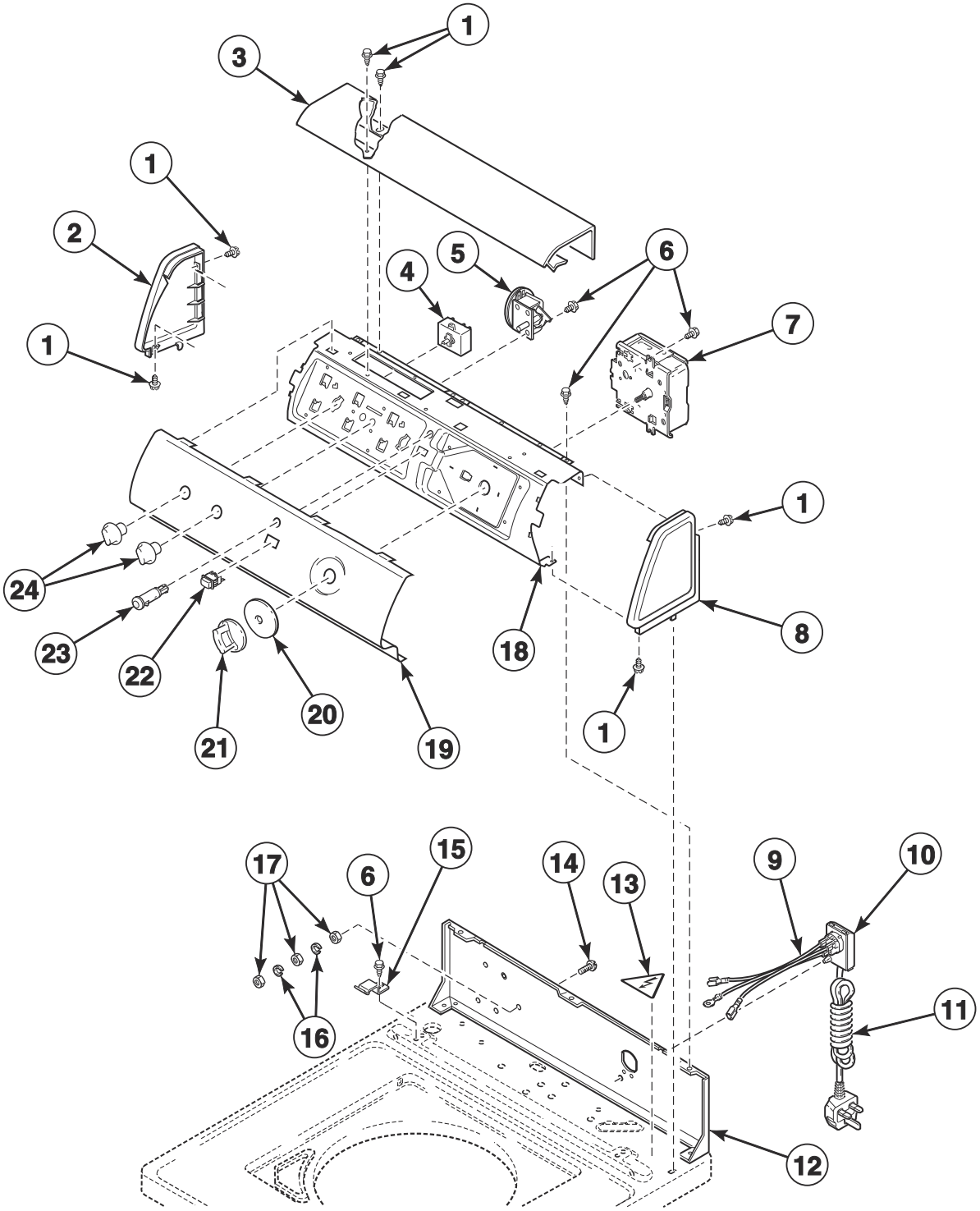

TLW1310P_201142

© Copyright, Alliance Laundry Systems LLC – DO NOT COPY or TRANSMIT

Graphic Panel, Control Support Panel and Controls (Drawing 8 of 9)

REF	PART NO.	DESCRIPTION	COMMENTS
1	D501086	Screw	
2	D504009WP	End Panel	White; Left
	N/A	End Panel	Almond; Left
	D504009QP	End Panel	Bisque; Left
3	39905W	Top Cover	White
	N/A	Top Cover	Almond
	39905Q	Top Cover	Bisque
4	35115	Temperature Switch	3 position
5	39286P	Pressure Switch	
6	23962	Screw	
7	200885P	Timer	
8	D504008WP	End Panel	White; Right
	D504008L	End Panel	Almond; Right
	D504008QP	End Panel	Bisque; Right
9	39923	Lead-In Wire Harness Assembly	
10	39922	Cable Connection Box	
11	39925	Power Cord Assembly	
12	39921	Hood Back Panel	
13	D502511	Electrical Shock Label	
14	28448	Screw	
15	35358	Hold-Down Clip	
16	28449	Washer	
17	28447	Nut	
18	38171	Control Support Panel	
19	200680W	Graphic Panel	Model LWS17N*B3069
	200679W	Graphic Panel	Model LWZ17N*B3069
20	36700W	Timer Skirt Assembly	White
	N/A	Timer Skirt Assembly	Almond
	36700Q	Timer Skirt Assembly	Bisque
21	201501W	Timer Knob	White
	201501Q	Timer Knob	Bisque
22	801434W	Push-to-Start Switch	White
	801434Q	Push-to-Start Switch	Bisque
23	39536	Lid Switch Indicator Light	
24	36701W	Knob Assembly	White
	36701L	Knob Assembly	Almond
	36701Q	Knob Assembly	Bisque

*** Add Letter To Designate Color. L - Almond Q - Bisque W - White**
N/A = Part no longer available

© Copyright, Alliance Laundry Systems LLC – DO NOT COPY or TRANSMIT

Graphic Panel, Control Support Panel and Controls (Drawing 9 of 9)

Model AWNA62SN301AW01

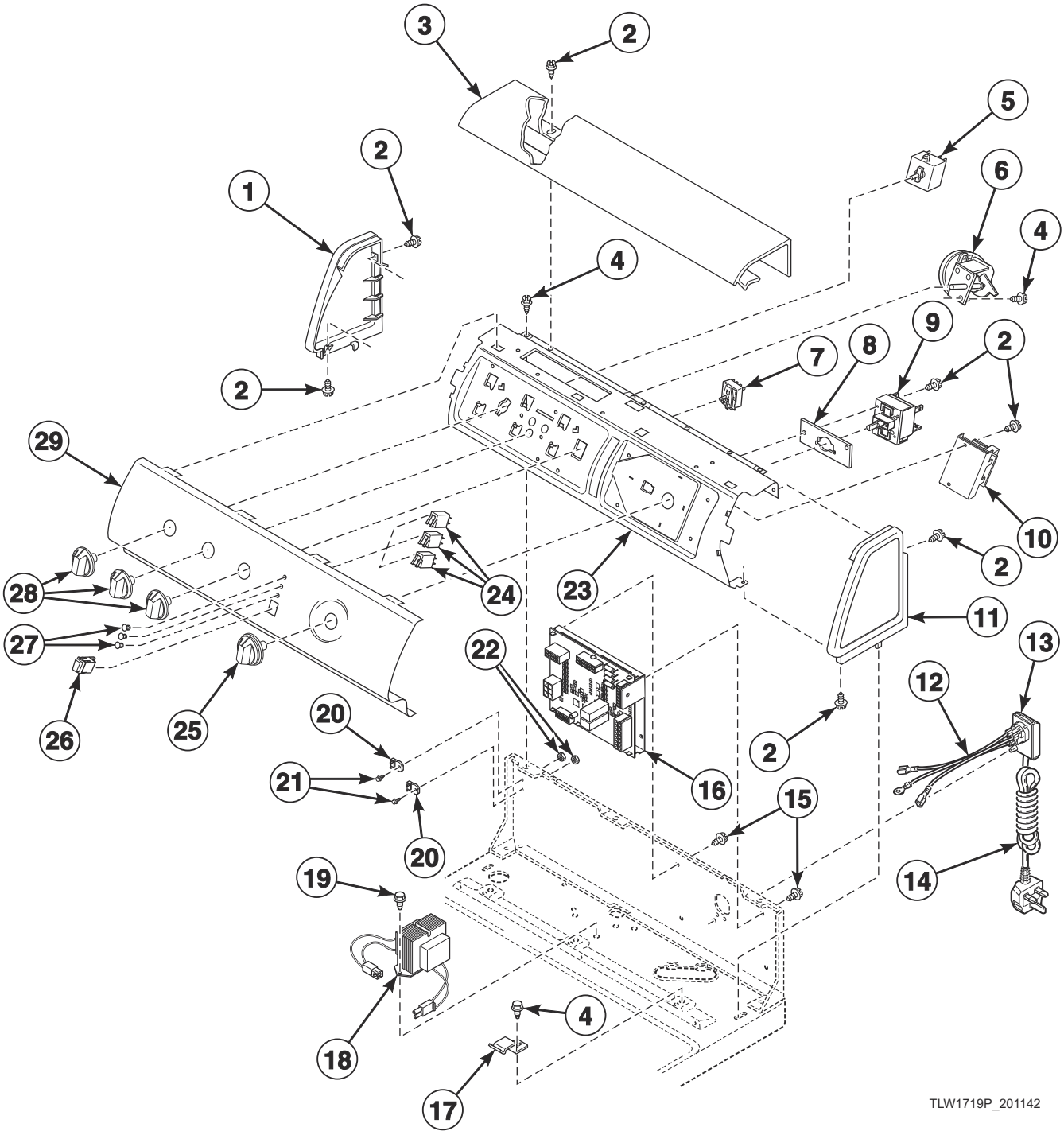

© Copyright, Alliance Laundry Systems LLC – DO NOT COPY or TRANSMIT

Graphic Panel, Control Support Panel and Controls (Drawing 9 of 9)

REF	PART NO.	DESCRIPTION	COMMENTS
1	D504009WP	End Panel	Left
2	D501086	Screw	
3	39905W	Top Cover	
4	23962	Screw	
5	35115	Temperature Switch	3 position
6	39286P	Pressure Switch	
7	803568	Selector Switch	
8	801390	Cycle Switch Bracket	
9	801240	Cycle Switch	
10	202450	Control Assembly	
11	D504008WP	End Panel	Right
12	39923	Lead-In Wire Harness Assembly	
13	39922	Cable Connection Box	
14	39931	Power Cord Assembly	
15	D501524	Screw	
16	202843P	Control Assembly	
17	35358	Hold-Down Clip	
18	201616P	Transformer	
19	D503661	Screw	
20	210100	Resistor	Mounted to top panel; Models starting Serial Nos. beginning 1403
21	685837	Screw	
22	802343	Nut	
23	202458	Control Support Panel	
24	801356	Indicator Light	
25	803168P	Knob Assembly	
26	801434W	Push-to-Start Switch	
27	801435	Indicator Light Lens	
28	803119P	Control Knob Assembly	
29	202448W	Graphic Panel	Models through Serial No. 1404009800
	203131W	Graphic Panel	Models starting Serial No. 1404009801

© Copyright, Alliance Laundry Systems LLC – DO NOT COPY or TRANSMIT

Graphic Panel, Control Support Panel and Temperature Control

Model AWZ53N*-1102

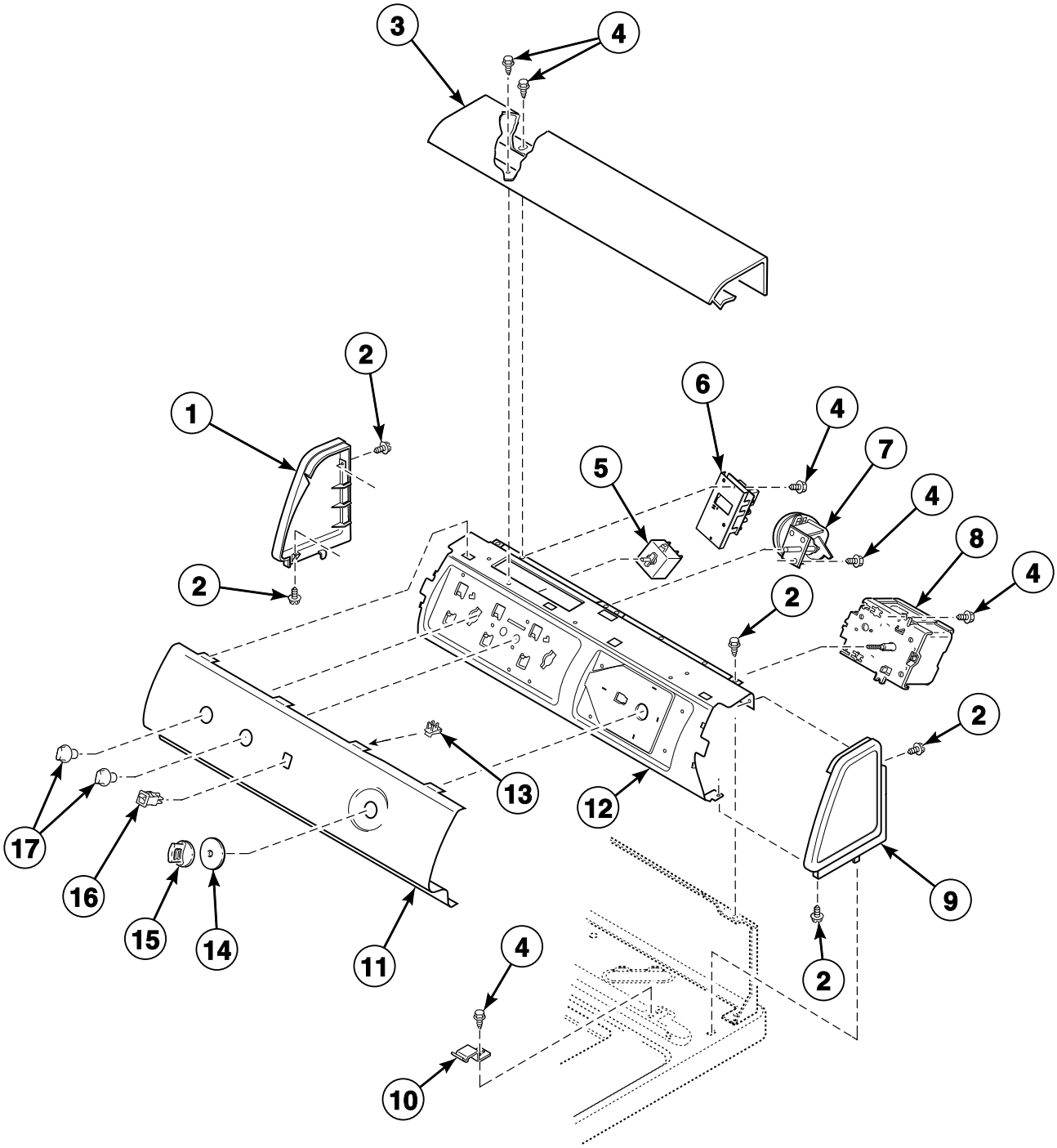

TLW1511P_201142

© Copyright, Alliance Laundry Systems LLC – DO NOT COPY or TRANSMIT

Graphic Panel, Control Support Panel and Temperature Control

REF	PART NO.	DESCRIPTION	COMMENTS
1	D504009WP	End Panel	White; Left
	N/A	End Panel	Almond; Left
	D504009QP	End Panel	Bisque; Left
2	D501086	Screw	
3	39905W	Top Cover	White
	N/A	Top Cover	Almond
	39905Q	Top Cover	Bisque
4	23962	Screw	
5	35115	Temperature Switch	
6	201279P	Temperature Control	
7	201609P	Pressure Switch	
8	38881P	Timer	
9	D504008WP	End Panel	White; Right
	D504008L	End Panel	Almond; Right
	D504008QP	End Panel	Bisque; Right
10	35358	Hold-Down Clip	
11	201513	Graphic Panel	
12	38171	Control Support Panel	
13	00161	Grounding Clip	
14	36700W	Timer Skirt Assembly	White
	N/A	Timer Skirt Assembly	Almond
	36700Q	Timer Skirt Assembly	Bisque
15	201501W	Timer Knob	White
	201501Q	Timer Knob	Bisque
16	38424W	Rocker Switch	White
	38424L	Rocker Switch	Almond
	38424Q	Rocker Switch	Bisque
17	36701W	Knob Assembly	White
	36701L	Knob Assembly	Almond
	36701Q	Knob Assembly	Bisque

*** Add Letter To Designate Color. L - Almond Q - Bisque W - White**
N/A = Part no longer available

© Copyright, Alliance Laundry Systems LLC – DO NOT COPY or TRANSMIT

Control Support Panel and Controls (Drawing 1 of 2)

Models AWN552SN301AW01, AWN552SN301NW22, AWN552SN301NW29, LWG74A*-3050, LWK23A*-3050, LWK24A*-3050, LWK24N*-3050, LWK73A*-3050, LWK74A*-3050, LWK74N*-3050, LWN312SP301AW01, LWS11A*-3062, LWS11N*-3062, LWS17A*-3028, LWS17A*-3050, LWS17M*-3050, LWS17N*-3028, LWS21A*-3062, LWS21N*-3062, LWS42M*-3050 and LWS42N*-3050

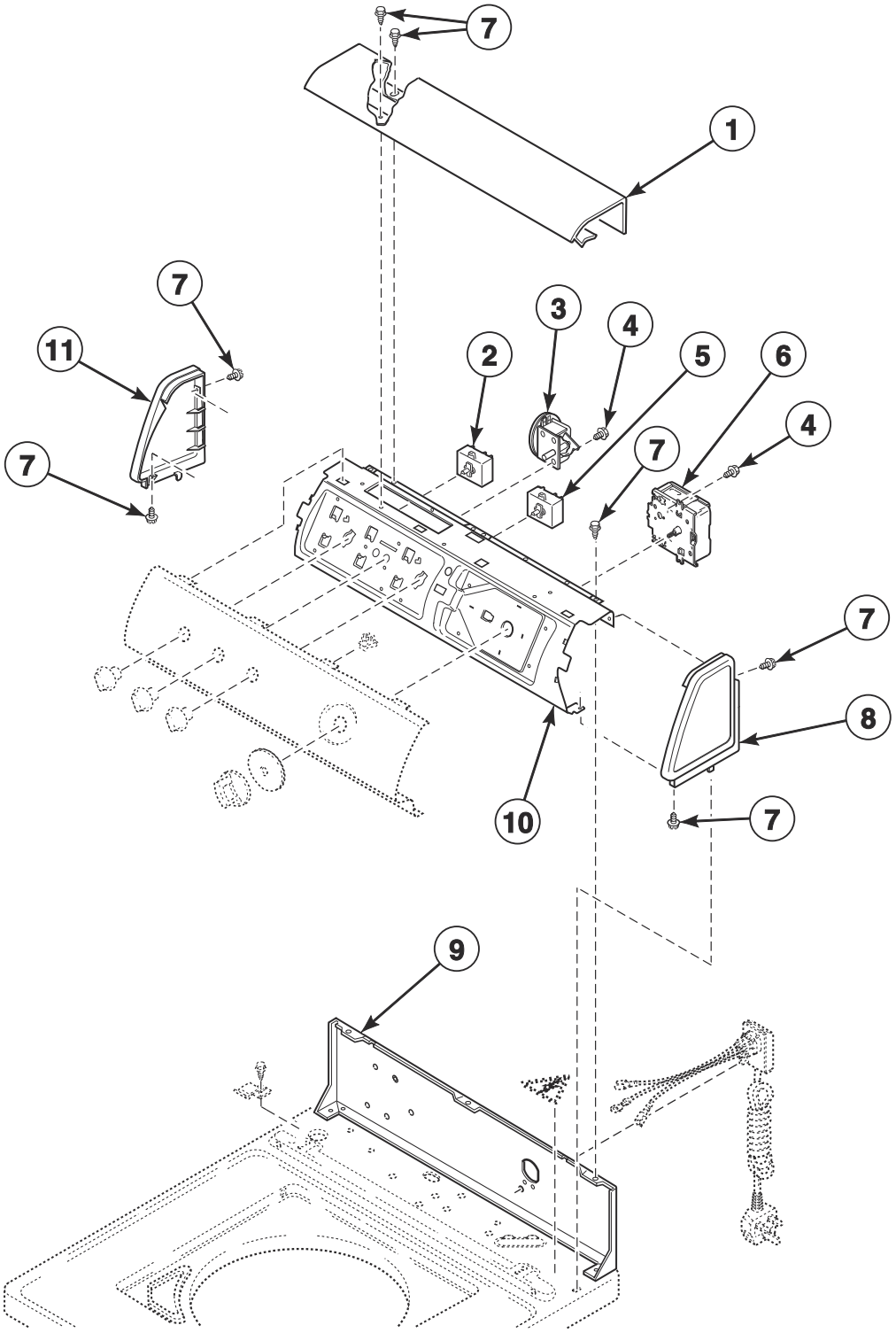

TLW1528P_201142

© Copyright, Alliance Laundry Systems LLC – DO NOT COPY or TRANSMIT

Control Support Panel and Controls (Drawing 1 of 2)

REF	PART NO.	DESCRIPTION	COMMENTS
1	39905W	Top Cover	White
	N/A	Top Cover	Almond
	39905Q	Top Cover	Bisque
2	35117	Temperature Switch	5 position; Models AWN552SN301AW01, AWN552SN301NW22, AWN552SN301NW29, LWG74A*-3050, LWK23A*-3050, LWK24A*-3050, LWK24N*-3050, LWK73A*-3050, LWK74A*-3050 and LWK74N*-3050
	35115	Temperature Switch	3 position; All other models
3	39286P	Pressure Switch	Models AWN552SN301AW01 and LWN312SP301AW01
	201927P	Pressure Switch	All other models
4	23962	Screw	
5	36951	Option Switch	Models AWN552SN301AW01, AWN552SN301NW22, AWN552SN301NW29, LWG74A*-3050, LWK73A*-3050, LWK74A*-3050 and LWK74N*-3050
6	37004P	Timer	Models AWN552SN301AW01, AWN552SN301NW22, AWN552SN301NW29, LWG74A*-3050, LWK73A*-3050, LWK74A*-3050 and LWK74N*-3050
	37925P	Timer	Models LWN312SP301AW01, LWS17A*-3050, LWS17M*-3050, LWS42M*-3050 and LWS42N*-3050
	37995P	Timer	Model LWS11A*-3062 through Serial No. 0007000815
	200604	Timer	Model LWS11A*-3062 starting Serial No. 0007000816; Model LWS11N*-3062
	201013P	Timer	Models LWK23A*-3050, LWK24A*-3050 and LWK24N*-3050; Model LWS21A*-3062 through Serial No. 0004002933
	200885P	Timer	Model LWS21A*-3062 starting Serial No. 0004002934; Models LWS17A*-3028, LWS17N*-3028 and LWS21N*-3062
7	D501086	Screw	
8	D504008WP	End Panel	White; Right
	D504008L	End Panel	Almond; Right
	D504008QP	End Panel	Bisque; Right
9	37782	Hood Back Panel	Models AWN552SN301NW29, LWG74A*-3050, LWK23A*-3050 and LWK73A*-3050; Model LWK24A*-3050 through Serial No. 0002002496; Model LWK74A*-3050 through Serial No. 0002000814; Models LWS11A*-3062 and LWS21A*-3062 through Serial No. 0005012191
	39921	Hood Back Panel	All other models
10	38171	Control Support Panel	
11	D504009WP	End Panel	White; Left
	N/A	End Panel	Almond; Left
	D504009QP	End Panel	Bisque; Left

*** Add Letter To Designate Color. L - Almond Q - Bisque W - White**
N/A = Part no longer available

© Copyright, Alliance Laundry Systems LLC – DO NOT COPY or TRANSMIT

Control Support Panel and Controls (Drawing 2 of 2)

Models AWZ17N*-1102, CWN311SP111CW01, FWN311SP301NW10, FWN311SP301NW22, LWH16N*-3322, LWH18A*-3322, LWH18N*-3322, LWN311SP101NW22, LWN311SP111NW22, LWN311SP111TW05, LWN311SP301NW22, LWN311SP331NW22, LWN311SP541NW23, LWN311SP541RW01, LWN412SP111MW33, LWS17A*-1000, LWS17A*-3000, LWS17A*-3022, LWS17A*-3300, LWS17A*-3322, LWS17A*B3020, LWS17A*K, LWS17B*K, LWS17M*-1000, LWS17M*-1127, LWS17M*-3000, LWS17M*-3022, LWS17M*-3300, LWS17M*-3322, LWS17M*K, LWS17N*-1000, LWS17N*-1122, LWS17N*-1127, LWS17N*-3000, LWS17N*-3022, LWS17N*-3300, LWS17N*-3322, LWS17N*-5423, LWS17N*K, LWY17A*-1109, LWY17B*-1109, LWY17M*-1109, LWZ17A*-3000, LWZ17A*B3020, LWZ17N*-3022, LWZ20M*-3300, LWZ20N*-3300, MWN311SP111TW06, TWN311SP301NW22, YWN321SP541RW01 and ZWN311SP111CW01

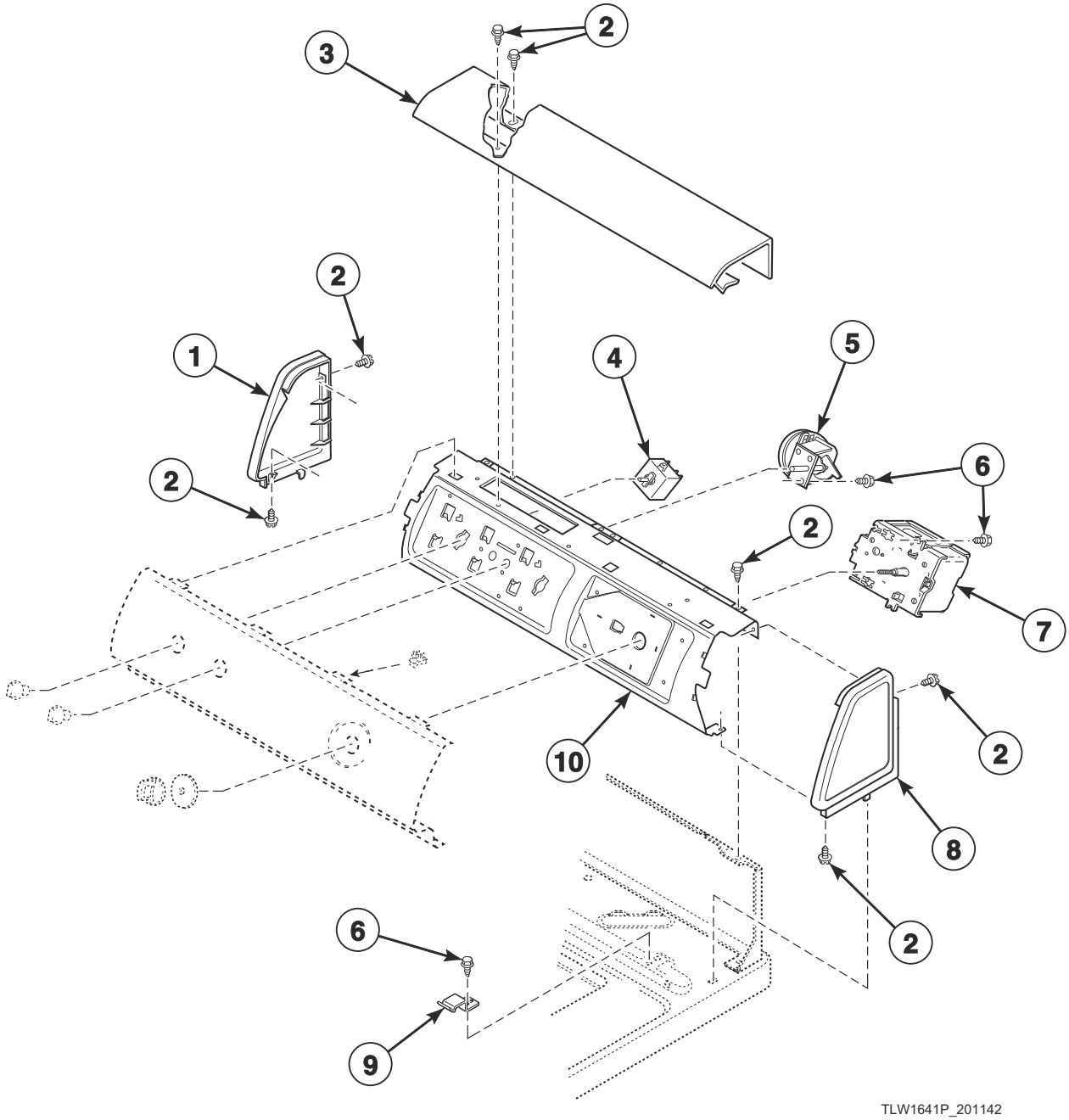

© Copyright, Alliance Laundry Systems LLC – DO NOT COPY or TRANSMIT

Control Support Panel and Controls (Drawing 2 of 2)

REF	PART NO.	DESCRIPTION	COMMENTS
1	D504009WP	End Panel	White; Left
	D504009QP	End Panel	Bisque; Left
2	D501086	Screw	
3	39905W	Top Cover	White
	39905Q	Top Cover	Bisque
4	36335	Temperature Switch	4 position; Models LWZ20M*-3300 and LWZ20N*-3300
	35115	Temperature Switch	3 position; All other models
5	201609P	Pressure Switch	Model CWN311SP111CW01 starting Serial Nos. beginning 1101; Models FWN311SP301NW10, FWN311SP301NW22, LWN311SP101NW22, LWN311SP111NW22, LWN311SP301NW22, LWN311SP331NW22, LWN311SP541NW23, LWN412SP111MW33, TWN311SP301NW22 and ZWN311SP111CW01
	39286P	Pressure Switch	Models LWN311SP541RW01 and YWN321SP541RW01
	201927P	Pressure Switch	All other models
6	23962	Screw	
7	37928P	Timer	Models LWN311SP101NW22, LWS17A*-1000, LWS17M*-1000 and LWS17N*-1000
	37930P	Timer	Models LWH16N*-3322, LWH18A*-3322, LWH18N*-3322, LWN311SP331NW22, LWN311SP541NW23, LWN311SP541RW01, LWS17A*-3300, LWS17M*-3300, LWS17M*-3322, LWS17N*-3300, LWS17N*-3322, LWS17N*-5423, LWZ20M*-3300, LWZ20N*-3300 and YWN321SP541RW01
	200927P	Timer	Models AWZ17N*-1102, CWN311SP111CW01, LWN311SP111NW22, LWN311SP111TW05, LWS17A*K, LWS17B*K, LWS17M*-1127, LWS17M*K, LWS17N*-1122, LWS17N*-1127, LWS17N*K, MWN311SP111TW06 and ZWN311SP111CW01
	37927P	Timer	Model LWN412SP111MW33
	200885P	Timer	All other models
8	D504008WP	End Panel	White; Right
	D504008L	End Panel	Almond; Right
	D504008QP	End Panel	Bisque; Right
9	35358	Hold-Down Clip	
10	38171	Control Support Panel	

*** Add Letter To Designate Color. L - Almond Q - Bisque W - White**

© Copyright, Alliance Laundry Systems LLC – DO NOT COPY or TRANSMIT

Graphic Panel and Control Knobs (Drawing 1 of 2)

Models AWN552SN301AW01, AWN552SN301NW22, AWN552SN301NW29, LWG74A*-3050, LWK23A*-3050, LWK24A*-3050, LWK24N*-3050, LWK73A*-3050, LWK74A*-3050, LWK74N*-3050, LWN312SP301AW01, LWS11A*-3062, LWS11N*-3062, LWS17A*-3028, LWS17A*-3050, LWS17M*-3050, LWS17N*-3028, LWS21A*-3062, LWS21N*-3062, LWS42M*-3050 and LWS42N*-3050

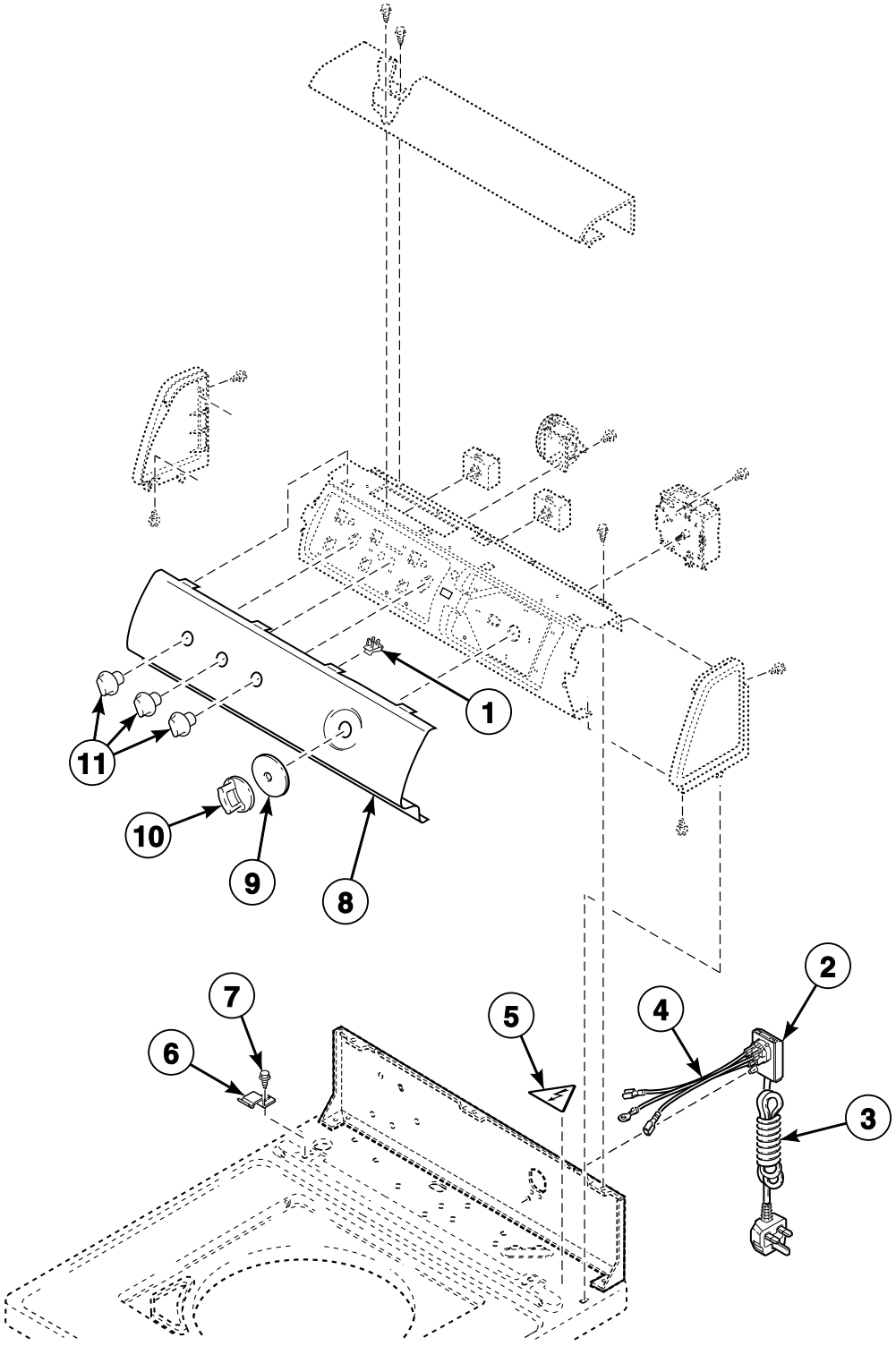

TLW1529P_201142

© Copyright, Alliance Laundry Systems LLC – DO NOT COPY or TRANSMIT

Graphic Panel and Control Knobs (Drawing 1 of 2)

REF	PART NO.	DESCRIPTION	COMMENTS
1	00161	Grounding Clip	
2	39922	Cable Connection Box	Models AWN552SN301AW01, AWN552SN301NW22, LWK24N*-3050, LWK74N*-3050, LWN312SP301AW01, LWS11N*-3062, LWS17A*-3028, LWS17A*-3050, LWS17M*-3050, LWS17N*-3028, LWS21N*-3062, LWS42M*-3050 and LWS42N*-3050; Model LWK24A*-3050 starting Serial No. 0002002497; Model LWK74A*-3050 starting Serial No. 0002000815; Models LWS11A*-3062 and LWS21A*-3062 starting Serial No. 0005012192
3	39929	Power Cord Assembly	Models LWS11A*-3062, LWS11N*-3062, LWS21A*-3062 and LWS21N*-3062 starting Serial No. 0005012192
	39984	Power Cord Assembly	Models LWS17A*-3028 and LWS17N*-3028
	39931	Power Cord Assembly	All other models starting Serial Nos. beginning 0002 except AWN552SN301NW29
4	39923	Lead-In Wire Harness Assembly	Models AWN552SN301AW01, AWN552SN301NW22, LWK24N*-3050, LWK74N*-3050, LWN312SP301AW01, LWS11N*-3062, LWS17A*-3028, LWS17A*-3050, LWS17M*-3050, LWS17N*-3028, LWS21N*-3062, LWS42M*-3050 and LWS42N*-3050; Model LWK24A*-3050 starting Serial No. 0002002497; Model LWK74A*-3050 starting Serial No. 0002000815; Models LWS11A*-3062 and LWS21A*-3062 starting Serial No. 0005012192
5	D502511	Electrical Shock Label	
6	35358	Hold-Down Clip	
7	23962	Screw	
8	N/A	Graphic Panel	Model LWS11A*-3062 through Serial No. 0007000815
	200611	Graphic Panel	Model LWS11A*-3062 starting Serial No. 0007000816; Model LWS11N*-3062
	200599	Graphic Panel	Model LWS21A*-3062 starting Serial No. 0004002934; Model LWS21N*-3062
	N/A	Graphic Panel	Model LWS21A*-3062 through Serial No. 0004002933
	N/A	Graphic Panel	Models LWG74A*-3050, LWK73A*-3050, LWK74A*-3050 and LWK74N*-3050
	38360P	Graphic Panel	Models LWK23A*-3050, LWK24A*-3050 and LWK24N*-3050
	38887W	Graphic Panel	White; Model LWS17N*-3028 through Serial Nos. beginning 0803; Model LWS17A*-3028
	38887Q	Graphic Panel	Bisque; Model LWS17N*-3028 through Serial Nos. beginning 0803; Model LWS17A*-3028
	39349W	Graphic Panel	Model LWS17N*-3028 starting Serial Nos. beginning 0804
	39171W	Graphic Panel	Models LWS17A*-3050, LWS17M*-3050 and LWS42M*-3050; Model LWS42N*-3050 through Serial Nos. beginning 1106
	202168W	Graphic Panel	Models AWN552SN301AW01 and AWN552SN301NW22
	202379W	Graphic Panel	Model LWN312SP301AW01; Model LWS42N*-3050 starting Serial Nos. beginning 1106
	203446W	Graphic Panel	Model AWN552SN301NW29
9	803116	Timer Skirt Assembly	Models AWN552SN301AW01, AWN552SN301NW22 and AWN552SN301NW29
	36700W	Timer Skirt Assembly	White; All other models
	N/A	Timer Skirt Assembly	Almond; All other models
	36700Q	Timer Skirt Assembly	Bisque; All other models
10	202133	Timer Knob Assembly	Models AWN552SN301AW01, AWN552SN301NW22 and AWN552SN301NW29
	201501W	Timer Knob	White; All other models
	201501Q	Timer Knob	Bisque; All other models
11	803119P	Control Knob Assembly	Models AWN552SN301AW01, AWN552SN301NW22 and AWN552SN301NW29
	36701W	Knob Assembly	White; All other models
	36701L	Knob Assembly	Almond; All other models
	36701Q	Knob Assembly	Bisque; All other models

*** Add Letter To Designate Color. L - Almond Q - Bisque W - White**

N/A = Part no longer available

© Copyright, Alliance Laundry Systems LLC – DO NOT COPY or TRANSMIT

Graphic Panel and Control Knobs (Drawing 2 of 2)

Models AWZ17N*-1102, CWN311SP111CW01, FWN311SP301NW10, FWN311SP301NW22, LWH16N*-3322, LWH18A*-3322, LWH18N*-3322, LWN311SP101NW22, LWN311SP111NW22, LWN311SP111TW05, LWN311SP301NW22, LWN311SP331NW22, LWN311SP541NW23, LWN311SP541RW01, LWN412SP111MW33, LWS17A*-1000, LWS17A*-3000, LWS17A*-3022, LWS17A*-3300, LWS17A*-3322, LWS17A*B3020, LWS17A*K, LWS17B*K, LWS17M*-1000, LWS17M*-1127, LWS17M*-3000, LWS17M*-3022, LWS17M*-3300, LWS17M*-3322, LWS17M*K, LWS17N*-1000, LWS17N*-1122, LWS17N*-1127, LWS17N*-3000, LWS17N*-3022, LWS17N*-3300, LWS17N*-3322, LWS17N*-5423, LWS17N*K, LWY17A*-1109, LWY17B*-1109, LWY17M*-1109, LWZ17A*-3000, LWZ17A*B3020, LWZ17N*-3022, LWZ20M*-3300, LWZ20N*-3300, MWN311SP111TW06, TWN311SP301NW22, YWN321SP541RW01 and ZWN311SP111CW01

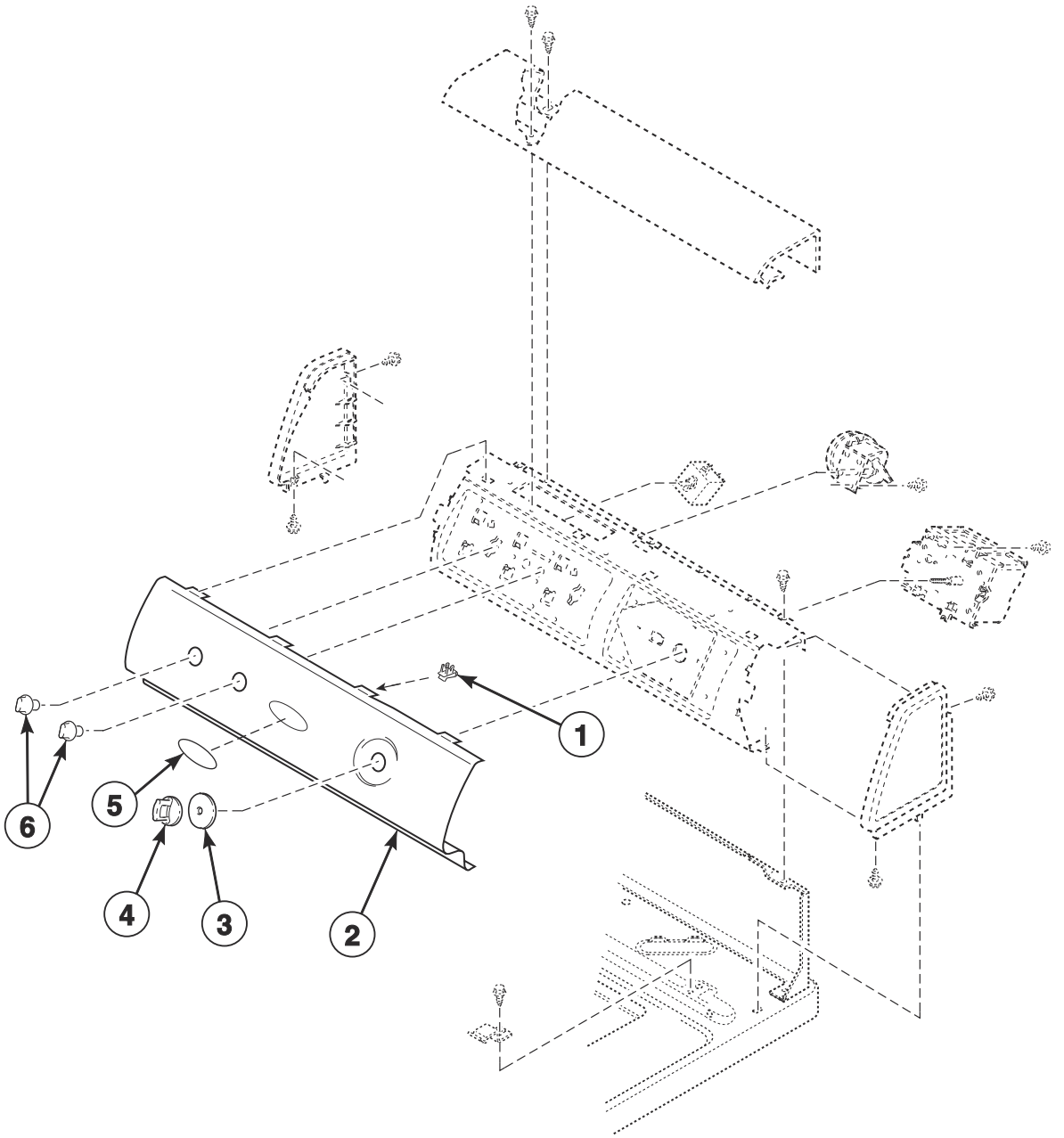

TLW1824P_201142

© Copyright, Alliance Laundry Systems LLC – DO NOT COPY or TRANSMIT

Graphic Panel and Control Knobs (Drawing 2 of 2)

REF	PART NO.	DESCRIPTION	COMMENTS
1	00161	Grounding Clip	
2	38939W	Graphic Panel	Models LWZ17A*-3000 and LWZ17N*-3022
	N/A	Graphic Panel	Models LWS17A*B3020, LWS17A*K, LWS17B*K, LWS17M*K and LWZ17A*B3020; Model LWS17N*K through Serial No. 0503000815
	201819W	Graphic Panel	Model LWS17N*K starting Serial No. 0503000816
	210133	Graphic Panel	Models LWH16N*-3322, LWH18A*-3322 and LWH18N*-3322
	200668	Graphic Panel	Models LWZ20M*-3300 and LWZ20N*-3300
	201843W	Graphic Panel	Model AWZ17N*-1102
	201427W	Graphic Panel	Model CWN311SP111CW01 through Serial Nos. beginning 1012
	202241W	Graphic Panel	Model CWN311SP111CW01 starting Serial Nos. beginning 1101
	202077W	Control Panel	Model ZWN311SP111CW01
	202297W	Graphic Panel	Models LWN311SP111TW05 and MWN311SP111TW06
	202236W	Control Panel	Models LWN311SP101NW22, LWN311SP111NW22, LWN311SP301NW22, LWN311SP331NW22 and LWN311SP541NW23
	202419W	Graphic Panel	Models FWN311SP301NW22 and TWN311SP301NW22
	202618W	Graphic Panel	Model FWN311SP301NW10
	204434	Control Panel	Model LWN412SP111MW33
	38887W	Graphic Panel	White; All other models
	38887Q	Graphic Panel	Bisque; All other models
3	803116	Timer Skirt Assembly	Model ZWN311SP111CW01
	N/A	Timer Skirt Assembly	Models with the letter “A” in the 6th character of model number except LWH18A*-3322 and LWS17A*K
	36700W	Timer Skirt Assembly	White; All other models
	36700Q	Timer Skirt Assembly	Bisque; All other models
4	202133	Timer Knob Assembly	Model ZWN311SP111CW01
	N/A	Timer Knob	Models with the letter “A” in the 6th character of model number except LWH18A*-3322 and LWS17A*K
	201501W	Timer Knob	White; All other models
	201501Q	Timer Knob	Bisque; All other models
5	805914	Label	Model TWN311SP301NW22
6	803119P	Control Knob Assembly	Model ZWN311SP111CW01
	33688	Knob Assembly	Models with the letter “A” in the 6th character of model number except LWH18A*-3322 and LWS17A*K
	36701W	Knob Assembly	White; All other models
	36701L	Knob Assembly	Almond; All other models
	36701Q	Knob Assembly	Bisque; All other models

*** Add Letter To Designate Color. L - Almond Q - Bisque W - White**

N/A = Part no longer available

© Copyright, Alliance Laundry Systems LLC – DO NOT COPY or TRANSMIT

Lid Switch Assembly

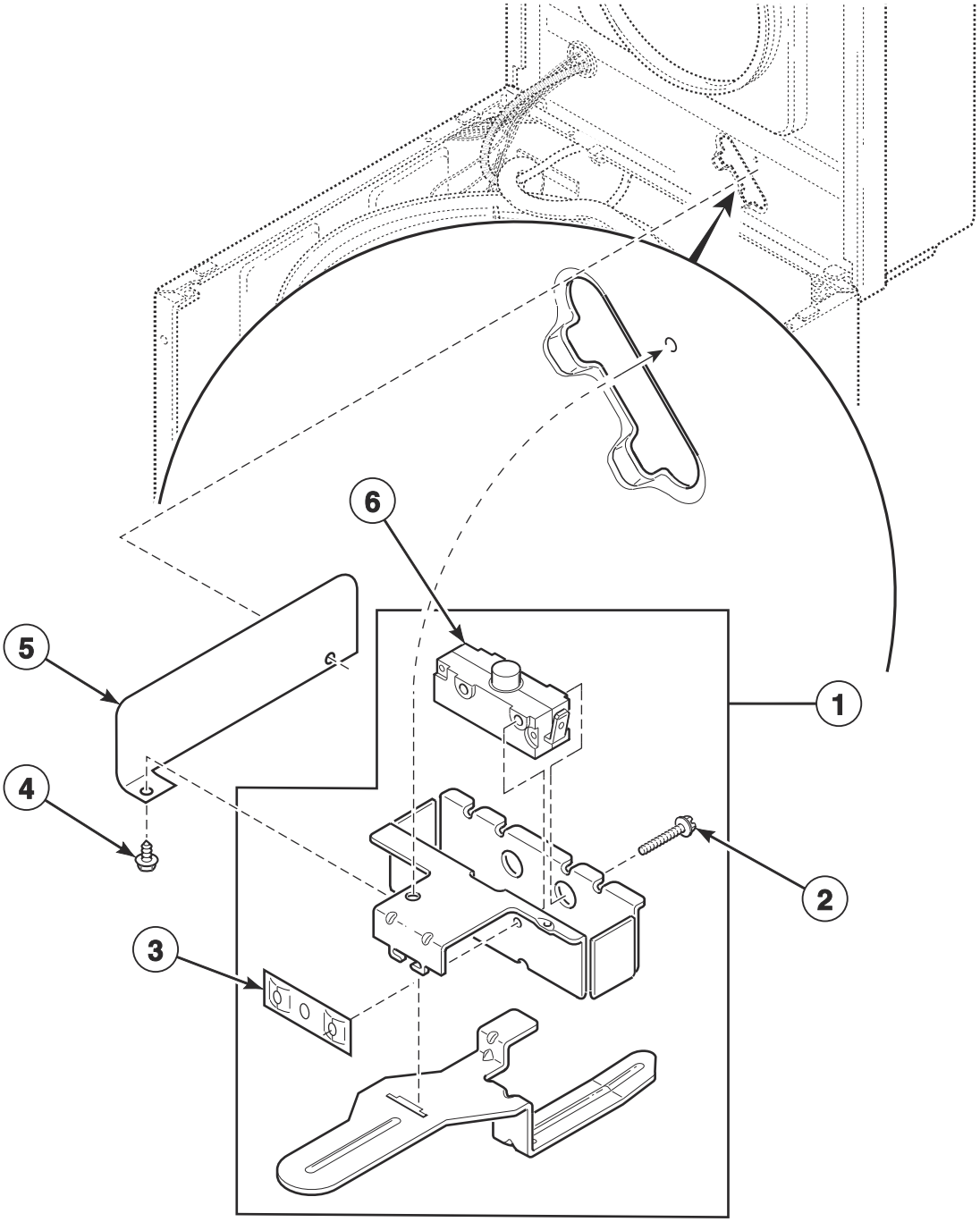

TLW1758P_201142

© Copyright, Alliance Laundry Systems LLC – DO NOT COPY or TRANSMIT

Lid Switch Assembly

REF	PART NO.	DESCRIPTION	COMMENTS
1	39256	Switch Assembly	Models LWS17A*-3028, LWS17A*B3020, LWS17A*B3069, LWS17M*B3020, LWS17M*B3069, LWS17N*-3028, LWS17N*B3020, LWS17N*B3069, LWZ17A*B3020, LWZ17A*B3069, LWZ17M*B3020, LWZ17M*B3069, LWZ17N*B3020 and LWZ17N*B3069
	37631	Lid Switch Assembly	All other models
2	M402574	Screw	
3	M400981	Nut	
4	23962	Screw	
5	202697	Lid Switch Shield	Models AWN552SN301NW29, AWNA62SN301AW01, LWN311SP541RW01, LWN311WP541RW01, LWS42N*-3050 and YWN321SP541RW01; Starting Serial No. 1404009801 and continuing through Serial No. 1810000001
6	37830	Switch	Models LWS17A*-3028, LWS17A*B3020, LWS17A*B3069, LWS17M*B3020, LWS17M*B3069, LWS17N*-3028, LWS17N*B3020, LWS17N*B3069, LWZ17A*B3020, LWZ17A*B3069, LWZ17M*B3020, LWZ17M*B3069, LWZ17N*B3020 and LWZ17N*B3069
	33445	Switch	All other models

*** Add Letter To Designate Color. L - Almond Q - Bisque W - White**

© Copyright, Alliance Laundry Systems LLC – DO NOT COPY or TRANSMIT

Top, Lid and Lid Lock

All Models with the Suffix B3069 in the Model Number

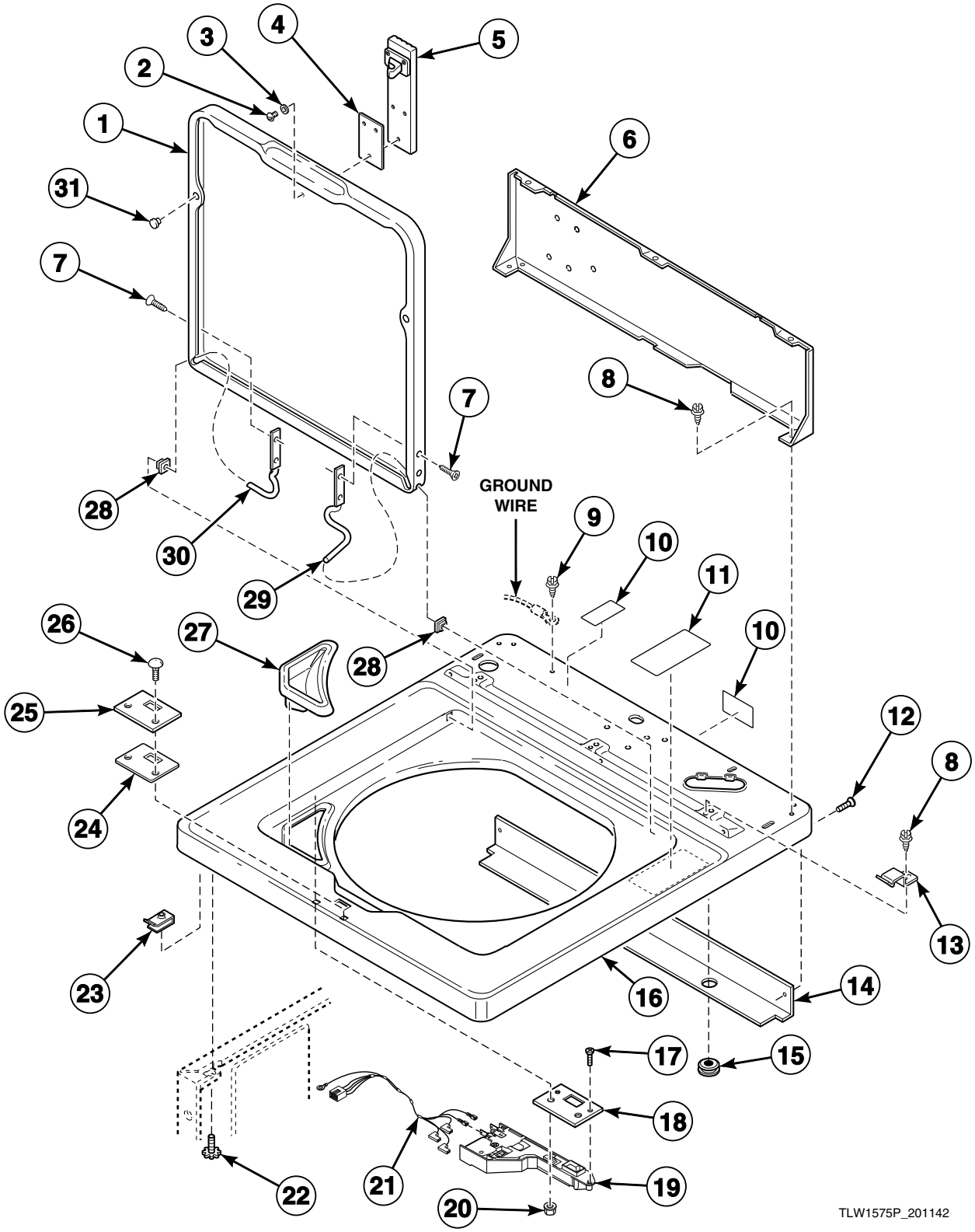

© Copyright, Alliance Laundry Systems LLC – DO NOT COPY or TRANSMIT

Top, Lid and Lid Lock

REF	PART NO.	DESCRIPTION	COMMENTS
	837P3	Lid Lock Kit	Includes items 5, 17 and 19
1	33552W	Lid	White
	N/A	Lid	Almond
	33552Q	Lid	Bisque
2	Q6695	Screw	Use with old latch
3	N/A	Washer	Use with old latch
4	201414	Door Lock Spacer	
	N/A	Door Latch Gasket	Use with old latch
5	201307P	Lid Lock Catch Assembly	Includes item 4 and attaching hardware
6	37782	Hood Back Panel	Models through Serial No. 00061999
	39921	Hood Back Panel	Models starting Serial No. 00062000
7	34337	Screw	
8	23962	Screw	
9	52909	Screw	
10	D502511	Electrical Shock Label	
11	36592	Warning Sticker	
12	431287	Screw	
13	35358	Hold-Down Clip	
14	39744	Top Shield	
15	80262	Grommet	
16	N/A	Top Assembly	Models through Serial Nos. beginning 0405
	201458WP	Top Assembly	Models starting Serial Nos. beginning 0405
17	202623	Screw	
	22649	Screw	Use with old lock
18	29676	Switch Mounting Plate	
19	202933	Lid Lock Kit	
20	22001	Nut	
21	31973	Lid Lock Wire Harness Assembly	
22	23008	Screw	
23	36020	Nut	
24	30378	Lid Lock Gasket	
25	37828P	Cover Plate	
26	32184	Bolt	
27	34776	Bleach Dispenser	Models through Serial Nos. beginning 0405
28	33446	Bushing	
29	36437	Lid Hinge	Right
30	36438	Lid Hinge	Left
31	21685	Bumper	

N/A = Part no longer available

© Copyright, Alliance Laundry Systems LLC – DO NOT COPY or TRANSMIT

Lid and Hood Back Panel

All Models without the Suffix B3069 in the Model Number

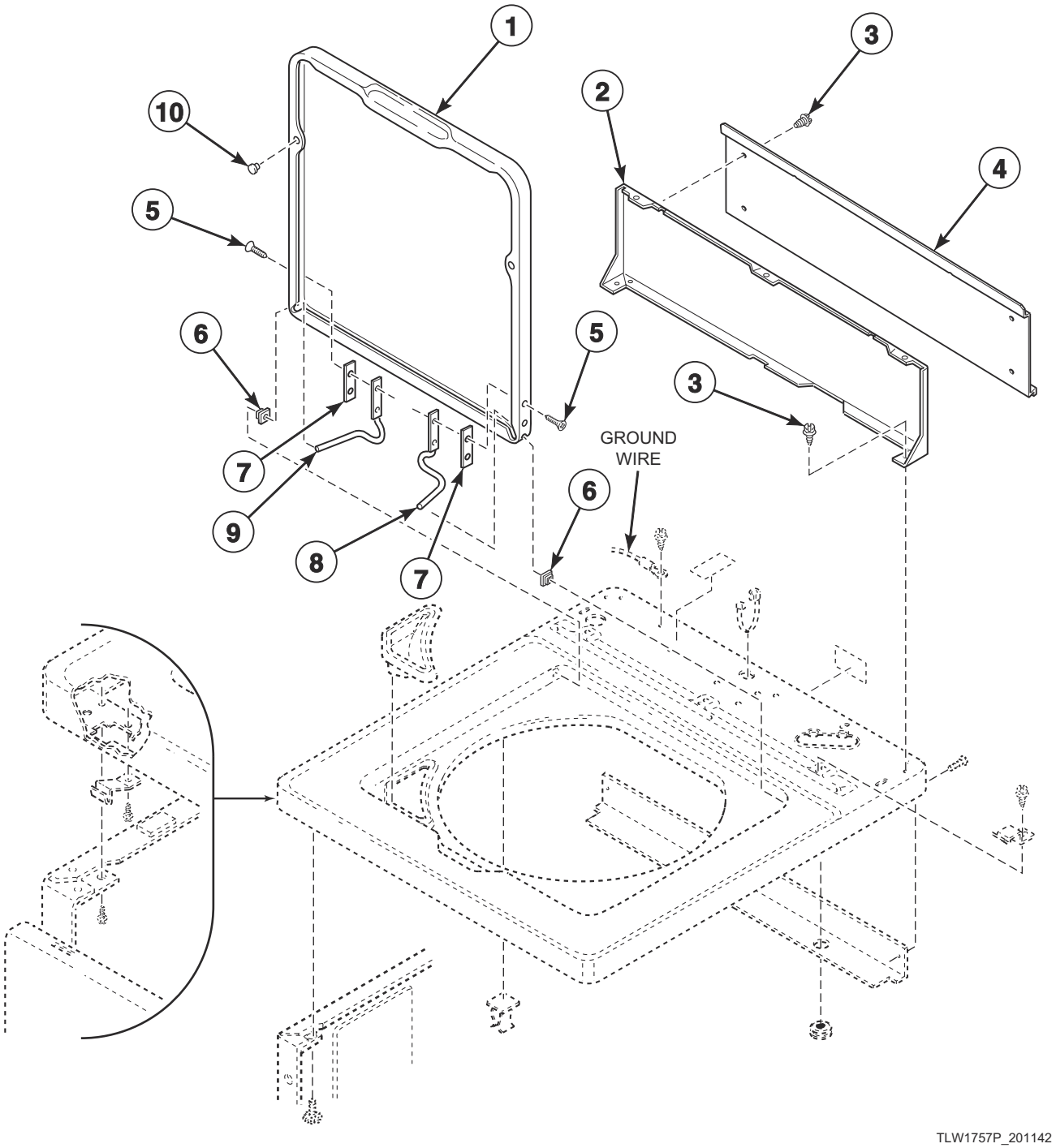

© Copyright, Alliance Laundry Systems LLC – DO NOT COPY or TRANSMIT

Lid and Hood Back Panel

REF	PART NO.	DESCRIPTION	COMMENTS
1	N/A	Lid	Models LWS16A*K, LWS16B*K, LWS16M*K, LWS16N*K, LWS17A*K, LWS17B*K and LWS17M*K; Model LWS17N*K through Serial No. 0503000815
	203078W	Lid	Model LWS17N*K starting Serial No. 0503000816
	201188WP	Lid	White; Models AWZ17N*-1102, AWZ44N*-1102, AWZ45N*-1102, AWZ51N*-1102, AWZ52N*-1102, AWZ53N*-1102, CWN311SP111CW01, CWN412SP111CW01, DWN412SP111CW01, LWD51N*-1100, LWD52M*-1100, LWD52N*-1100, LWT42N*-1100, LWT52N*-1100, LWZ01M*-1102, LWZ01N*-1102, LWZ02N*-1102, LWZ22M*-1102, LWZ22N*-1102, LWZ42M*-1102, LWZ42N*-1102, LWZ52M*-1102, LWZ52N*-1102, LWZ77M*-1102, LWZ77N*-1102, YWN311PP111CW01, ZWN311SP111CW01, ZWN402PP111CW01, ZWN412SP111CW01 and ZWN432SP111CW01
	201188QP	Lid	Bisque; Models AWZ17N*-1102, AWZ44N*-1102, AWZ45N*-1102, AWZ51N*-1102, AWZ52N*-1102, AWZ53N*-1102, CWN311SP111CW01, CWN412SP111CW01, DWN412SP111CW01, LWD51N*-1100, LWD52M*-1100, LWD52N*-1100, LWT42N*-1100, LWT52N*-1100, LWZ01M*-1102, LWZ01N*-1102, LWZ02N*-1102, LWZ22M*-1102, LWZ22N*-1102, LWZ42M*-1102, LWZ42N*-1102, LWZ52M*-1102, LWZ52N*-1102, LWZ77M*-1102, LWZ77N*-1102, YWN311PP111CW01, ZWN311SP111CW01, ZWN402PP111CW01, ZWN412SP111CW01 and ZWN432SP111CW01
	37395WP	Lid	White; Models AWN552SN301NW29, LWS17A*B3020, LWS17M*B3020, LWS17N*B3020, LWZ17A*B3020, LWZ17M*B3020, LWZ17N*B3020 and TWN311SP301NW22; Model LWS17N*-3028 starting Serial Nos. beginning 0804
	37395QP	Lid	Bisque; Models AWN552SN301NW29, LWS17A*B3020, LWS17M*B3020, LWS17N*B3020, LWZ17A*B3020, LWZ17M*B3020, LWZ17N*B3020 and TWN311SP301NW22; Model LWS17N*-3028 starting Serial Nos. beginning 0804
	204700W	Lid	Model AWNA62SN301AW01
	37395WP	Lid	White; All other models
	37395QP	Lid	Bisque; All other models
2	39921	Hood Back Panel	Models LWS17M*B3020 and LWZ17M*B3020 starting Serial No. 0204008036; Model LWK24A*-3050 starting Serial No. 0002002497; Models LWK73A*-3050 and LWK74A*-3050 starting Serial No. 0002000815; Models LWS11A*-3062 and LWS21A*-3062 starting Serial No. 0005012191; Models AWN552SN301AW01, AWN552SN301NW22, AWNA62SN301AW01, LWK24N*-3050, LWK74N*-3050, LWN312SP301AW01, LWS11N*-3062, LWS17A*-3028, LWS17A*-3050, LWS17M*-3050, LWS17N*-3028, LWS21N*-3062, LWS42M*-3050 and LWS42N*-3050
	203110	Hood Back Panel	Model LWN412SP111MW33
	37782	Hood Back Panel	All other models
3	23962	Screw	
4	203070	Rear Hood Panel Shield	Models AWNA62SN301AW01 and LWS42N*-3050; Starting Serial No. 1404009801
	202902	Rear Hood Panel Shield	Models AWN552SN301NW29, LWN311SP541RW01, LWN311WP541RW01 and YWN321SP541RW01; Starting Serial No. 1405031688
5	34337	Screw	
6	33446	Bushing	
7	34338	Hinge Gasket	Model AWNA62SN301AW01
8	36437	Lid Hinge	Right
9	36438	Lid Hinge	Left; Model LWH18A*-3322; Model LWS11A*-3062 starting Serial No. 0007000816 and continuing through Serial No. 0109016179; Model LWS21A*-3062 starting Serial No. 0004002934 and continuing through Serial No. 0109016179
	36513	Lid Hinge	Left; All other models
10	21685	Bumper	

*** Add Letter To Designate Color. L - Almond Q - Bisque W - White**

N/A = Part no longer available

© Copyright, Alliance Laundry Systems LLC – DO NOT COPY or TRANSMIT

Top (Drawing 1 of 2)

All Models without the Suffix B3069 in the Model Number

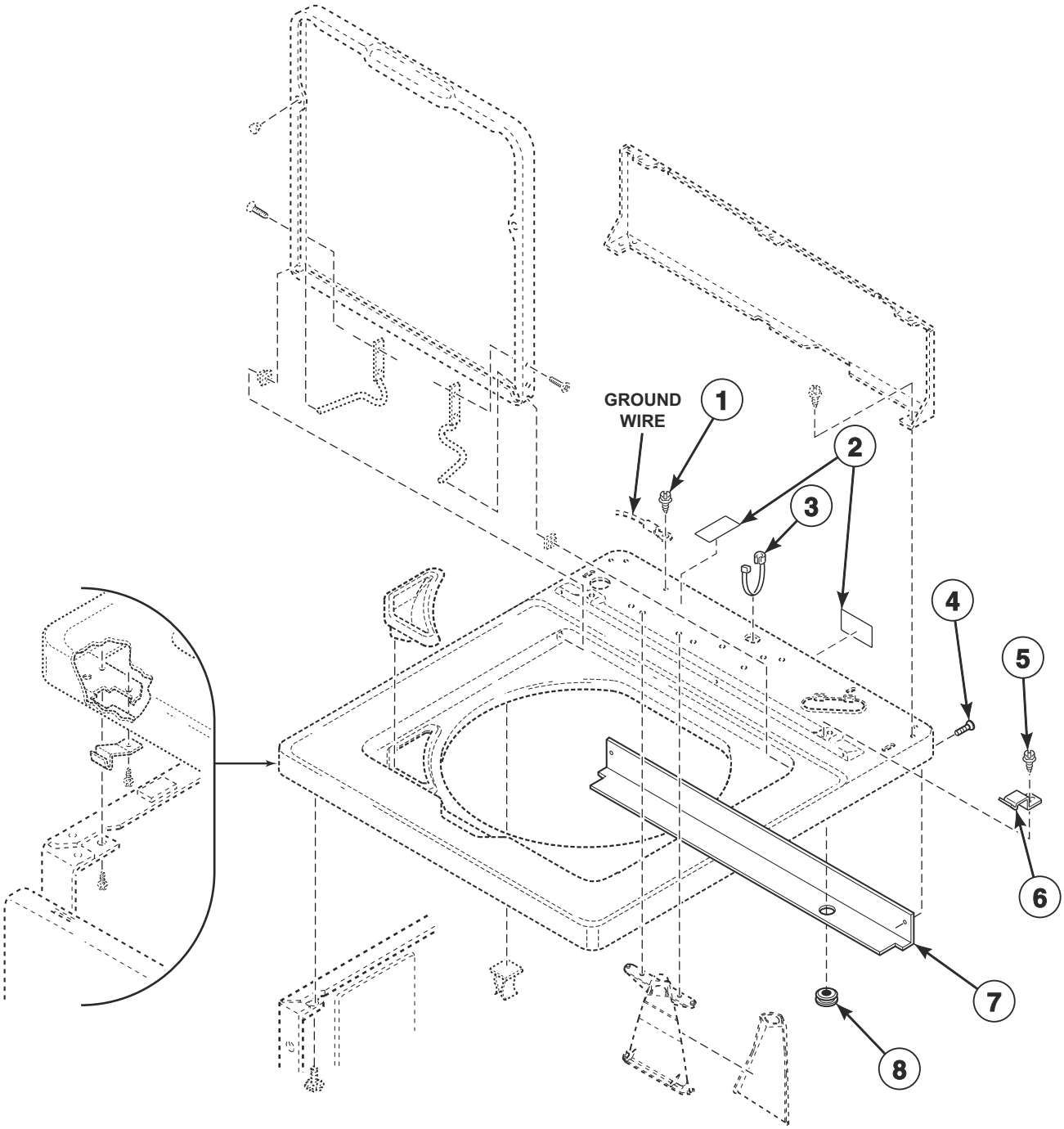

TLW1783P_201142

© Copyright, Alliance Laundry Systems LLC – DO NOT COPY or TRANSMIT

Top (Drawing 1 of 2)

REF	PART NO.	DESCRIPTION	COMMENTS
1	52909	Screw	
2	D502511	Electrical Shock Label	Models LWS17A*B3020, LWS17M*B3020, LWS17N*B3020, LWZ17A*B3020, LWZ17M*B3020 and LWZ17N*B3020
	D500316	Warning Label	Models AWZ17N*-1102, AWZ44N*-1102, AWZ45N*-1102, AWZ51N*-1102, AWZ52N*-1102, AWZ53N*-1102, CWN311SP111CW01, CWN412SP111CW01, DWN412SP111CW01, LWB19A*-1109, LWB19B*-1109, LWB19M*-1109, LWD51N*-1100, LWD52M*-1100, LWD52N*-1100, LWT42N*-1100, LWT52N*-1100, LWY17A*-1109, LWY17B*-1109, LWY17M*-1109, LWY45A*-1109, LWY45B*-1109, LWY45M*-1109, LWZ01M*-1102, LWZ01N*-1102, LWZ02N*-1102, LWZ22M*-1102, LWZ22N*-1102, LWZ42M*-1102, LWZ42N*-1102, LWZ52M*-1102, LWZ52N*-1102, LWZ77M*-1102, LWZ77N*-1102, YWN311PP111CW01, ZWN311SP111CW01, ZWN402PP111CW01, ZWN412SP111CW01 and ZWN432SP111CW01
	202260	Warning Label	Model LWS17N*-3028
	F8614201	Shock Warning Label	Model LWN412SP111MW33
	39251	Warning Label	All other models
3	N/A	Strain Relief	Models LWS17A*B3020 and LWZ17A*B3020
	38384	Strain Relief	All models except AWN552SN301AW01, AWN552SN301NW22, LWK24A*-3050, LWK24N*-3050, LWK74A*-3050, LWK74N*-3050, LWS17A*-3050, LWS17A*B3020, LWS17M*B3020, LWS17N*B3020, LWZ17A*B3020, LWZ17M*B3020 and LWZ17N*B3020
4	431287	Screw	Models LWS17A*B3020, LWS17M*B3020, LWS17N*B3020, LWZ17A*B3020, LWZ17M*B3020 and LWZ17N*B3020
5	23962	Screw	
6	35358	Hold-Down Clip	
7	39744	Top Shield	Models LWS17A*B3020, LWS17M*B3020, LWS17N*B3020, LWZ17A*B3020, LWZ17M*B3020 and LWZ17N*B3020; Models AWNA62SN301AW01 and LWS42N*-3050 through Serial No. 1404009800 and starting again at Serial Nos. beginning 1411
	202932	Top Shield	Models AWNA62SN301AW01, LWN311SP541RW01, LWN311WP541RW01, LWS42N*-3050 and YWN321SP541RW01 starting Serial No. 1404009801 and continuing through Serial Nos. beginning 1411
8	80262	Grommet	Models LWS17A*B3020, LWS17M*B3020, LWS17N*B3020, LWZ17A*B3020, LWZ17M*B3020 and LWZ17N*B3020

*** Add Letter To Designate Color. L - Almond Q - Bisque W - White**

N/A = Part no longer available

© Copyright, Alliance Laundry Systems LLC – DO NOT COPY or TRANSMIT

Top (Drawing 2 of 2)

All Models without the Suffix B3069 in the Model Number

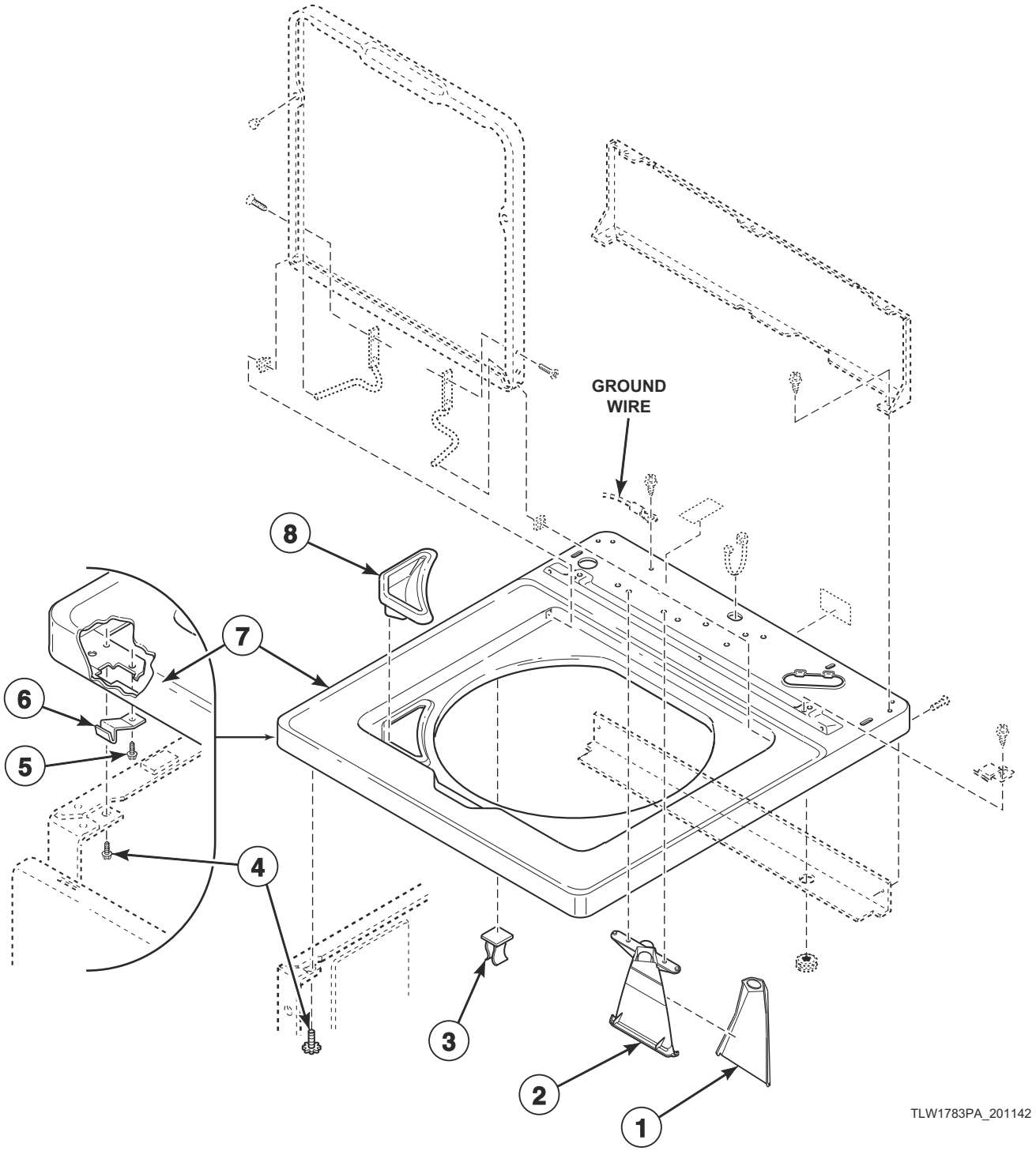

© Copyright, Alliance Laundry Systems LLC – DO NOT COPY or TRANSMIT

Top (Drawing 2 of 2)

REF	PART NO.	DESCRIPTION	COMMENTS
1	202894	Inlet Cover	Models AWN552SN301NW29, FWN311SP301NW10, FWN311SP301NW22, LWH16N*-3322, LWH18N*-3322, LWN311SP101NW22, LWN311SP111NW22, LWN311SP301NW22, LWN311SP541NW23, LWN311WP101NW22, LWN311WP111NW22, LWN311WP301NW22, LWN311WP541NW23, LWN412SP111MW33, LWS21N*-3062, LWS42N*-3050 and LWZ17N*-3022; Starting Serial No. 1810000001
2	202900	Inlet Deflector	Models AWN552SN301NW29, FWN311SP301NW10, FWN311SP301NW22, LWH16N*-3322, LWH18N*-3322, LWN311SP101NW22, LWN311SP111NW22, LWN311SP301NW22, LWN311SP541NW23, LWN311WP101NW22, LWN311WP111NW22, LWN311WP301NW22, LWN311WP541NW23, LWN412SP111MW33, LWS21N*-3062, LWS42N*-3050 and LWZ17N*-3022; Starting Serial No. 1810000001
3	36519	Hinge Stop Clip	
4	33562	Screw	
5	D501086	Screw	
6	38271	Hold-Down Clip	Use for older style panel attachment
7	39346WP	Top Assembly	White; Models LWS17A*B3020, LWS17M*B3020, LWS17N*B3020, LWZ17A*B3020, LWZ17M*B3020 and LWZ17N*B3020
	N/A	Top Assembly	Bisque; Models LWS17A*B3020, LWS17M*B3020, LWS17N*B3020, LWZ17A*B3020, LWZ17M*B3020 and LWZ17N*B3020
	202481WP	Top Assembly	Model AWNA62SN301AW01
	37992WP	Top	White; All other models
	37992LP	Top	Almond; All other models
	37992QP	Top	Bisque; All other models
8	34776	Bleach Dispenser	All models except LWS17A*B3020, LWS17M*B3020, LWS17N*B3020, LWZ17A*B3020, LWZ17M*B3020 and LWZ17N*B3020

*** Add Letter To Designate Color. L - Almond Q - Bisque W - White**

N/A = Part no longer available

© Copyright, Alliance Laundry Systems LLC – DO NOT COPY or TRANSMIT

Fill Hose, Mixing Valve-to-Tub Cover Hose and Mixing Valve

Model AWZ53N*-1102

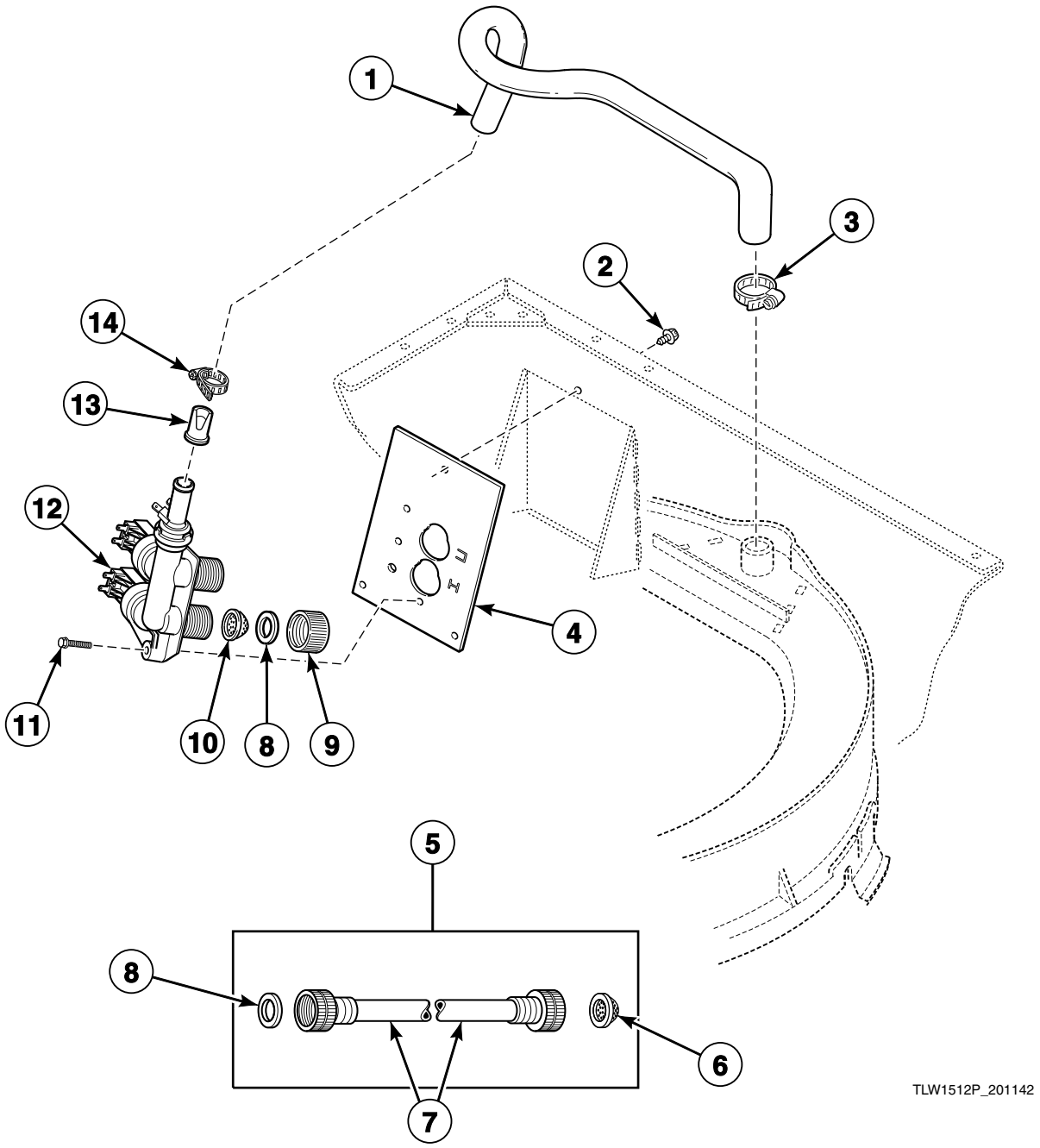

© Copyright, Alliance Laundry Systems LLC – DO NOT COPY or TRANSMIT

Fill Hose, Mixing Valve-to-Tub Cover Hose and Mixing Valve

REF	PART NO.	DESCRIPTION	COMMENTS
1	201302P	Mixing Valve-to-Tub Cover Hose	
2	33562	Screw	
3	800803	Hose Clamp	
4	201303	Mixing Valve Bracket	
5	F200116	Water Hose	5 feet; Includes items 6 and 8; 2 U.S. standard thread hose couplings
	38349P	Fill Hose Kit	5 feet; Includes 2 of item 8; 1 U.S. standard thread and 1 metric thread hose coupling
6	803615	Washer	Filter screen
	802254	Washer	Flow restrictor; Water pressure reducer; Available for water pressure up to but not exceeding 120 psi
7	20617	Fill Hose	8 feet; 2 U.S. standard thread hose couplings
	20618	Fill Hose	10 feet; 2 U.S. standard thread hose couplings
	37380	Fill Hose	8 feet; 1 U.S. standard thread and 1 metric thread hose coupling
	37381	Fill Hose	10 feet; 1 U.S. standard thread and 1 metric thread hose coupling
8	20290	Washer	
9	24145	Cap	Use to cap off hot water side of mixing valve on certain models
10	24122	Mixing Valve Screen	
11	39397	Screw	
12	201304P	Mixing Valve	
13	34500	Backflow Preventer	
14	36801	Hose Clamp	

*** Add Letter To Designate Color. L - Almond Q - Bisque W - White**

© Copyright, Alliance Laundry Systems LLC – DO NOT COPY or TRANSMIT

Fill Hose, Mixing Valve-to-Tub Cover Hose and Mixing Valve

Model AWNA62SN301AW01

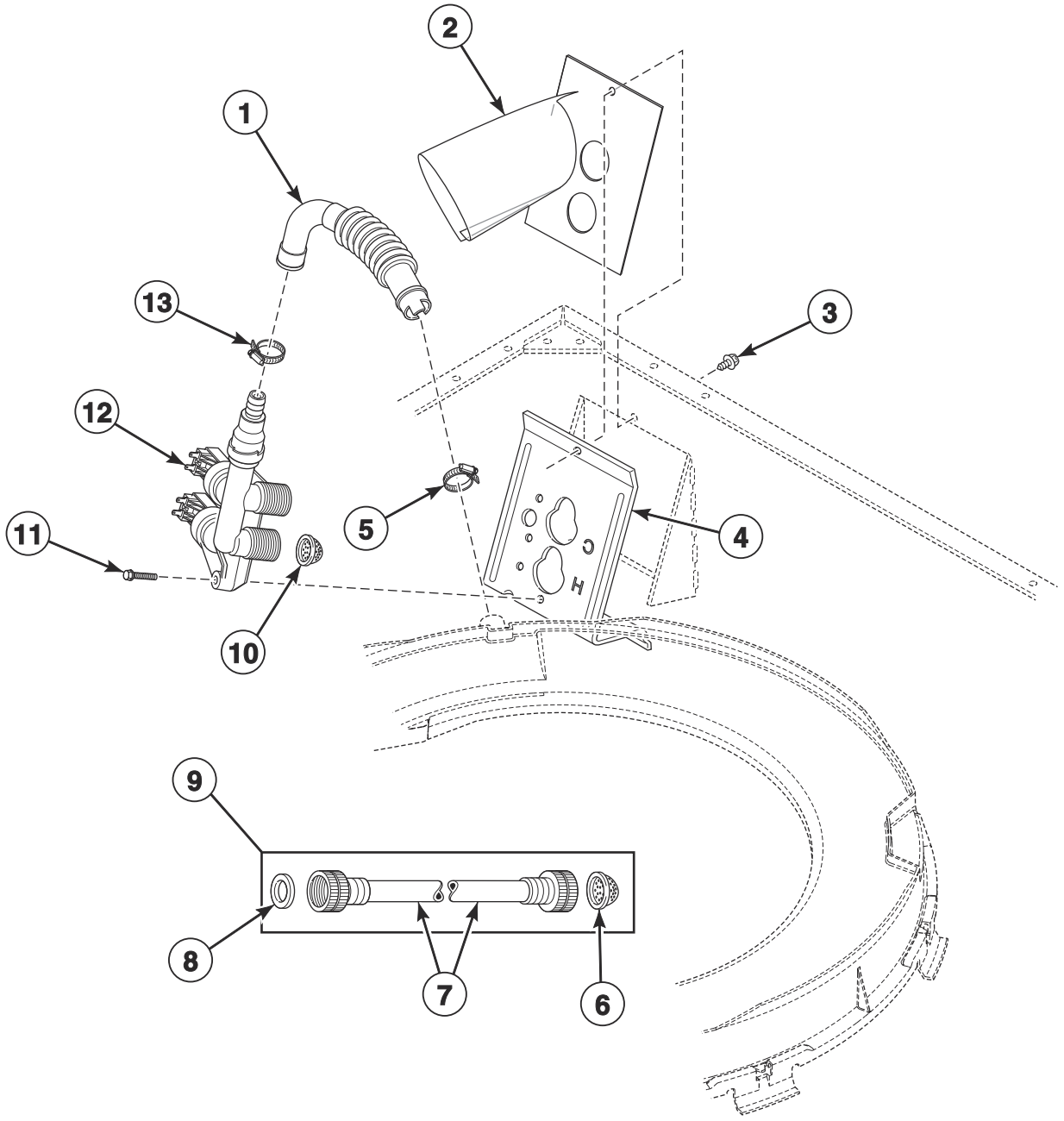

© Copyright, Alliance Laundry Systems LLC – DO NOT COPY or TRANSMIT

Fill Hose, Mixing Valve-to-Tub Cover Hose and Mixing Valve

REF	PART NO.	DESCRIPTION	COMMENTS
1	202472	Mixing Valve-to-Tub Cover Hose	
2	202899	Mixing Valve Shield	Models starting Serial No. 1404009801
3	33562	Screw	
4	39407	Mixing Valve Mounting Bracket	
5	800803	Hose Clamp	
6	803615	Washer	Filter screen
	802254	Washer	Flow restrictor; Water pressure reducer; Available for water pressure up to but not exceeding 120 psi
7	20617	Fill Hose	8 feet; 2 U.S. standard thread hose couplings
	20618	Fill Hose	10 feet; 2 U.S. standard thread hose couplings
	37380	Fill Hose	8 feet; 1 U.S. standard thread and 1 metric thread hose coupling
	37381	Fill Hose	10 feet; 1 U.S. standard thread and 1 metric thread hose coupling
	202800	Fill Hose	Models starting Serial No. 1404009801; 4 feet; 1 U.S. standard thread and 1 metric thread hose coupling
8	20290	Washer	
9	F200116	Water Hose	5 feet; Includes items 4 and 6; 2 U.S. standard thread hose couplings
	38349P	Fill Hose Kit	5 feet; Includes 2 of item 6; 1 U.S. standard thread and 1 metric thread hose coupling
10	24122	Mixing Valve Screen	
11	39397	Screw	
12	202396P	Mixing Valve	Models through Serial Nos. beginning 1412
	203145P	Mixing Valve	Models starting Serial Nos. beginning 1412
13	36801	Hose Clamp	

© Copyright, Alliance Laundry Systems LLC – DO NOT COPY or TRANSMIT

Fill Hose and Mixing Valve-to-Tub Cover Hose

All Models Except AWZ53N*-1102 and AWNA62SN301AW01

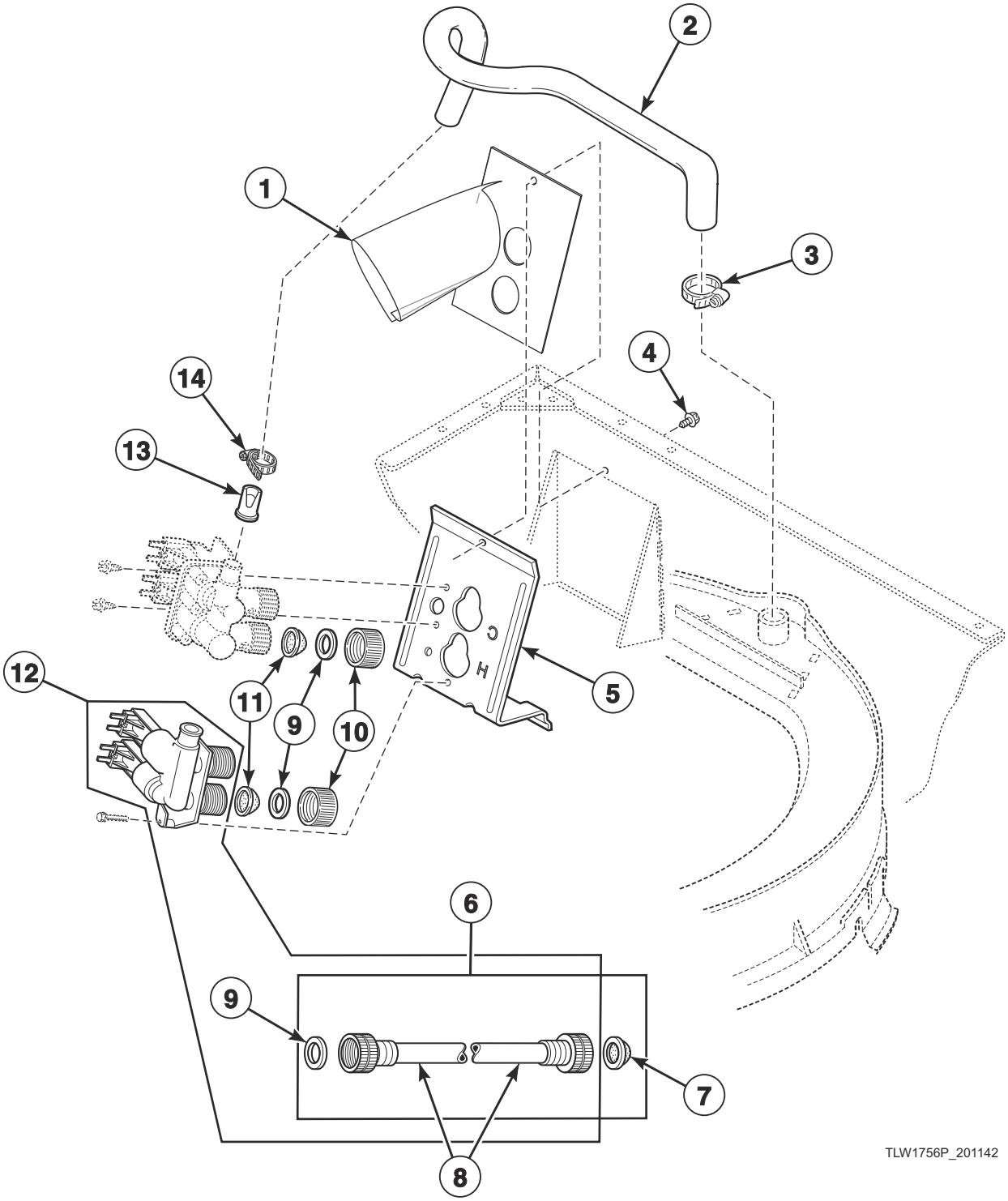

© Copyright, Alliance Laundry Systems LLC – DO NOT COPY or TRANSMIT

Fill Hose and Mixing Valve-to-Tub Cover Hose

REF	PART NO.	DESCRIPTION	COMMENTS
1	202899	Mixing Valve Shield	Models AWN552SN301NW29, LWN311SP541RW01, LWN311WP541RW01, LWS42N*-3050 and YWN321SP541RW01; Starting Serial No. 1404009801
2	204400	Valve to Inlet Hose	Models AWN552SN301NW29, FWN311SP301NW10, FWN311SP301NW22, LWH16N*-3322, LWH18N*-3322, LWN311SP101NW22, LWN311SP111NW22, LWN311SP301NW22, LWN311SP541NW23, LWN311WP101NW22, LWN311WP111NW22, LWN311WP301NW22, LWN311WP541NW23, LWN412SP111MW33, LWS21N*-3062, LWS42N*-3050 and LWZ17N*-3022; Starting Serial No. 1810000001
	38155	Mixing Valve-to-Tub Cover Hose	Models AWN552SN301NW29, FWN311SP301NW10, FWN311SP301NW22, LWH16N*-3322, LWH18N*-3322, LWN311SP101NW22, LWN311SP111NW22, LWN311SP301NW22, LWN311SP541NW23, LWN311WP101NW22, LWN311WP111NW22, LWN311WP301NW22, LWN311WP541NW23, LWN412SP111MW33, LWS21N*-3062, LWS42N*-3050 and LWZ17N*-3022 through Serial No.1810000001; All other models
3	800803	Hose Clamp	
4	33562	Screw	
5	39407	Mixing Valve Mounting Bracket	
6	F200116	Water Hose	5 feet; Includes items 7 and 9; 2 U.S. standard thread hose couplings
	38349P	Fill Hose Kit	5 feet; Includes 2 of item 9; 1 U.S. standard thread and 1 metric thread hose coupling
7	803615	Washer	Filter screen
	802254	Washer	Flow restrictor; Water pressure reducer; Available for water pressure up to but not exceeding 120 psi
8	20617	Fill Hose	8 feet; 2 U.S. standard thread hose couplings
	20618	Fill Hose	10 feet; 2 U.S. standard thread hose couplings
	37380	Fill Hose	8 feet; 1 U.S. standard thread and 1 metric thread hose coupling
	37381	Fill Hose	10 feet; 1 U.S. standard thread and 1 metric thread hose coupling
	202800	Fill Hose	Models LWN311SP541RW01, LWN311WP541RW01, LWS42N*-3050 and YWN321SP541RW01; Starting Serial No. 1404009801; 4 feet; 1 U.S. standard thread and 1 metric thread hose coupling
9	20290	Washer	
10	24145	Cap	Use to cap off hot water side of mixing valve on certain models
11	24122	Mixing Valve Screen	
12	RB150001	Mixing Valve Kit	Includes 201402 Mixing Valve and F200116 Water Hose
13	34500	Backflow Preventer	Models AWN552SN301NW29, FWN311SP301NW10, FWN311SP301NW22, LWH16N*-3322, LWH18N*-3322, LWN311SP101NW22, LWN311SP111NW22, LWN311SP301NW22, LWN311SP541NW23, LWN311WP101NW22, LWN311WP111NW22, LWN311WP301NW22, LWN311WP541NW23, LWN412SP111MW33, LWS21N*-3062, LWS42N*-3050 and LWZ17N*-3022; Through Serial No. 1810000001
14	36801	Hose Clamp	

*** Add Letter To Designate Color. L - Almond Q - Bisque W - White**

© Copyright, Alliance Laundry Systems LLC – DO NOT COPY or TRANSMIT

Mixing Valve

All Models Except AWZ53N*-1102 and AWNA62SN301AW01

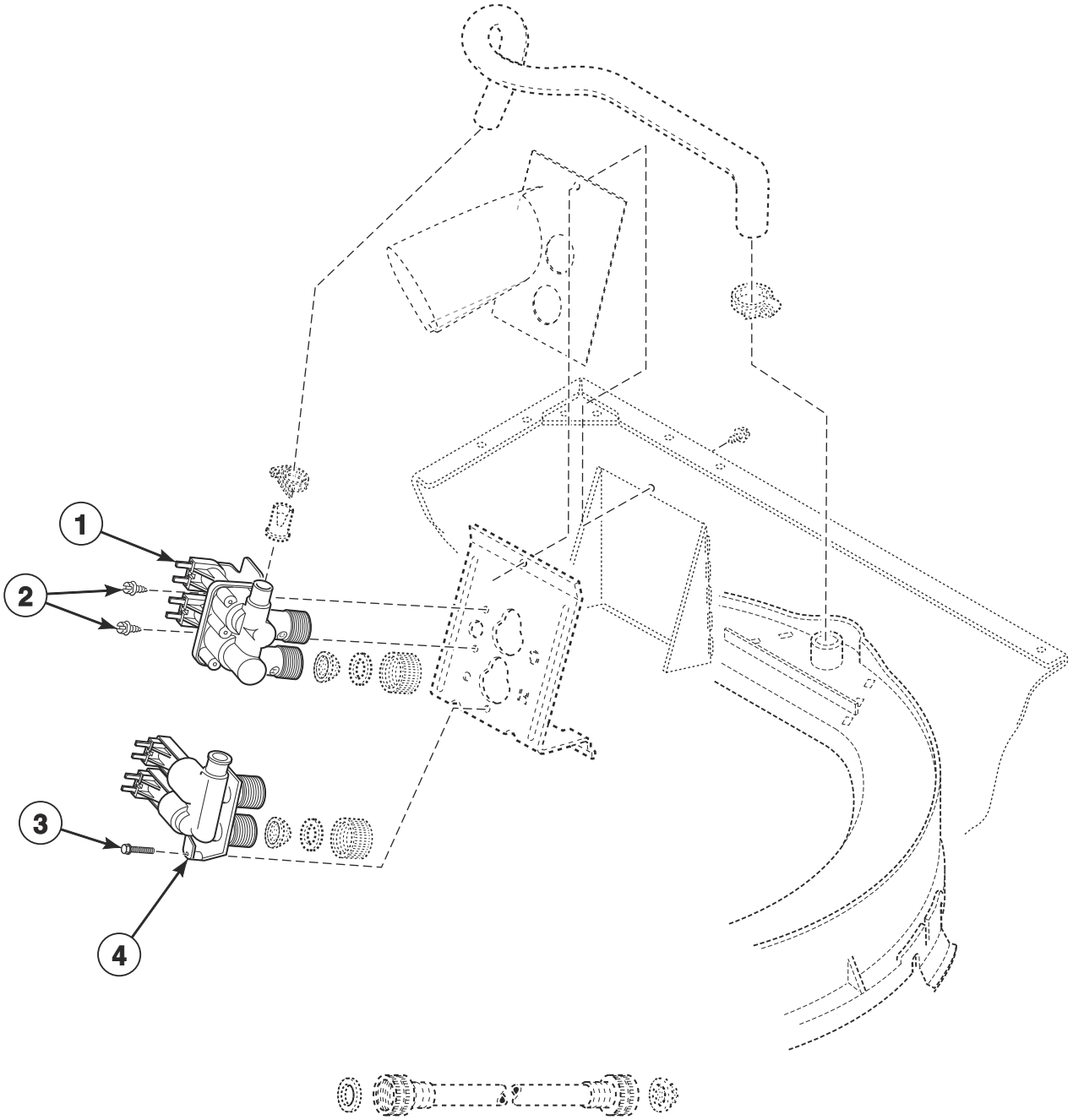

TLW1756PA_201142

© Copyright, Alliance Laundry Systems LLC – DO NOT COPY or TRANSMIT

Mixing Valve

REF	PART NO.	DESCRIPTION	COMMENTS
1	38495P	Mixing Valve	120 Volt models through Serial No. 9809033480
	38813P	Mixing Valve	240 Volt; Models with suffixes 3000, 3022, 3028, 3088, 3300 and 3322 through Serial No. 981022645
	38918P	Mixing Valve	240 Volt; Models AWN552SN301AW01, AWN552SN301NW22 and LWN312SP301AW01; Model LWS42N*-3050 through Serial No. 1404009800; Model AWN552SN301NW29 through Serial No. 1810000001; Models with suffixes B3020 and B3069; Models with suffixes 3050 and 3062; Models LWS21N*-3062 and LWN42N*-3050 through Serial No. 1810000001
2	D501086	Screw	Use with item 1
3	39397	Screw	Use with item 4
4	201468P	Mixing Valve	Models AWZ17N*-1102, AWZ44N*-1102, AWZ51N*-1102, CWN311SP111CW01, CWN412SP111CW01, DWN412SP111CW01, LWD51N*-1100, LWN311PP111NW22, LWN311SP111TW05, LWN412SP111MW33, LWS02N*-1122, LWS16N*-1122, LWS17N*-1122, LWZ02N*-1102, MWN311SP111TW06, YWN311PP111CW01, ZWN311SP111CW01, ZWN402PP111CW01, ZWN412SP111CW01 and ZWN432SP111CW01
	39070P	Mixing Valve	240 Volt; Model LWS42N*-3050 starting Serial No. 1404009801 and continuing through Serial No. 1810000001; Models LWN311SP331NW22, LWN311SP541RW01, LWN311WP301NW22, LWN311WP331NW22, LWN311WP541RW01, TWN311SP301NW22 and YWN321SP541RW01; Models with suffixes 3000, 3022, 3028, 3088, 3300, 3322 and 5423 starting Serial No. 9810022646; Models FWN311SP301NW10, FWN311SP301NW22, LWN311SP301NW22, LWN311SP541NW23, LWN311WP541NW23 and LWZ17N*-3022 through Serial No. 1810000001
	203742	Mixing Valve	240 Volt; Models AWN552SN301NW29, FWN311SP301NW10, FWN311SP301NW22, LWN311SP301NW22, LWN311WP541NW23, LWS21N*-3062, LWS42N*-3050 and LWZ17N*-3022 starting Serial No. 1810000001
	201402P	Mixing Valve	120 Volt; Models AWZ45N*-1102, AWZ52N*-1102, LWB19A*-1109, LWB19B*-1109, LWB19M*-1109, LWD51N*-1100, LWD52M*-1100, LWS01A*-1000, LWS01A*-1088, LWS01M*-1000, LWS01M*-1088, LWS16A*-1000, LWS16A*K, LWS16B*K, LWS16M*-1000, LWS16M*K, LWS16N*-1000, LWS16N*K, LWS17A*-1000, LWS17A*K, LWS17B*K, LWS17M*-1000, LWS17M*-1127, LWS17M*K, LWS17N*-1000, LWS17N*-1127, LWS17N*K, LWS45M*-1127, LWS45N*-1127, LWS45N*-1130, LWS52N*-1127, LWT42N*-1100, LWT52N*-1100, LWY17A*-1109, LWY17B*-1109, LWY17M*-1109, LWY45A*-1109, LWY45B*-1109, LWY45M*-1109, LWZ01M*-1102, LWZ01N*-1102, LWZ16A*-1000, LWZ16M*-1000, LWZ16N*-1000, LWZ22M*-1102, LWZ22N*-1102, LWZ42M*-1102, LWZ42N*-1102, LWZ52M*-1102, LWZ52N*-1102, LWZ77M*-1102 and LWZ77N*-1102 models starting Serial No. 9809033481; Models LWN311SP101NW22, LWN311SP111NW22, LWN311WP101NW22, LWN311WP111NW22 and LWN412SP111MW33 through Serial No. 1810000001
	203741	Mixing Valve	120 Volt; Models LWN311SP101NW22, LWN311SP111NW22, LWN311WP101NW22, LWN311WP111NW22 and LWN412SP111MW33 starting Serial No. 1810000001

*** Add Letter To Designate Color. L - Almond Q - Bisque W - White**

© Copyright, Alliance Laundry Systems LLC – DO NOT COPY or TRANSMIT

Motor, Mounting Bracket, Belt, Pump and Idler Assembly

Models LWZ77M*-1102 and LWZ77N*-1102

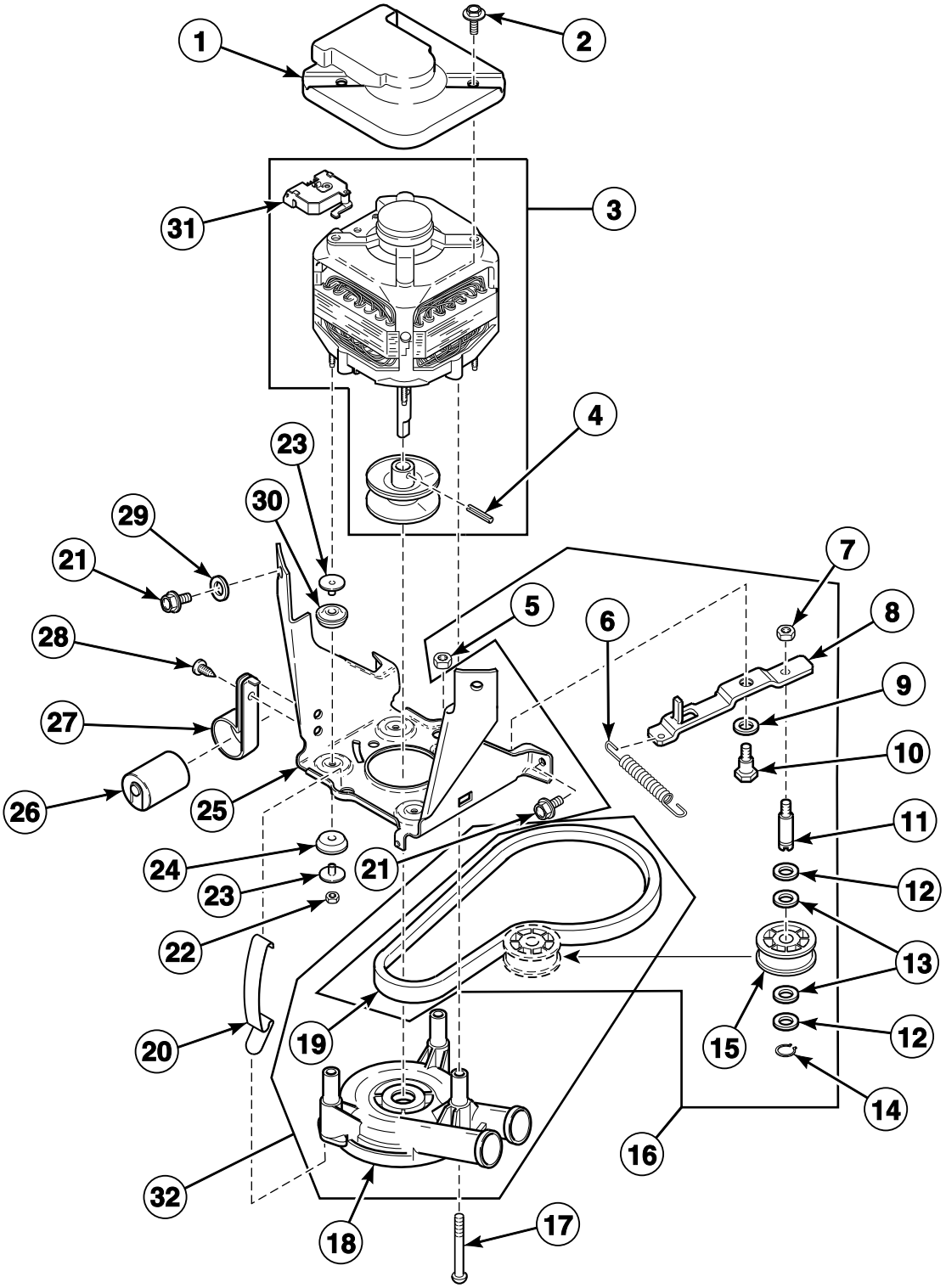

© Copyright, Alliance Laundry Systems LLC – DO NOT COPY or TRANSMIT

Motor, Mounting Bracket, Belt, Pump and Idler Assembly

REF	PART NO.	DESCRIPTION	COMMENTS
1	34754	Motor Shield	
2	36639	Screw	
3	38037P	Motor Kit	3 speed
4	10416	Roll Pin	Models through Serial No. 0011013645
5	52566	Nut	
6	201189	Idler Lever Spring	Model LWZ77N*-1102 through Serial Nos. beginning 0401 and starting again at Serial No. 0510022781
	39666	Idler Lever Spring	All other models
	202032	Idler Lever Spring	Use on units experiencing low RPM
7	28803	Nut	
8	38011	Idler Lever	
9	81392	Washer	
10	27229	Screw	
11	56461P	Shaft	Models through Serial No. 0107000541
	210186	Idler Shaft	Models starting Serial No. 0107000542
12	D504082	Washer	Models starting Serial No. 0107000542
13	52549	Washer	Nylatron
14	23748	Retaining Ring	
15	38225P	Idler Pulley	
16	959P3	Idler Lever Kit	Includes items 5-15 (201189 Idler Lever Spring) and 19
17	34565	Screw	Models through Serial No. 0204019086
18	201566P	Pump	
19	38174	Agitate and Spin Belt	
20	210202	Spring Clip	Models starting Serial No. 0204019087
21	35369	Screw	
22	35423	Nut	
23	38325	Isolator Post	
24	204062	Isolator Assembly	
25	200941	Motor Mount Bracket	
26	39661	Capacitor Assembly	
27	37535	Capacitor Clamp	
28	52909	Screw	
29	37772	Washer	
30	204449	Motor Mount	
31	N/A	Motor Switch	
32	RB150003	Belt and Pump Kit	Includes items 18 and 19

*** Add Letter To Designate Color. L - Almond Q - Bisque W - White**

N/A = Part no longer available

© Copyright, Alliance Laundry Systems LLC – DO NOT COPY or TRANSMIT

Motor and Mounting Bracket (Drawing 1 of 3)

Models LWS11A*-3062, LWS11N*-3062, LWS21A*-3062 and LWS21N*-3062

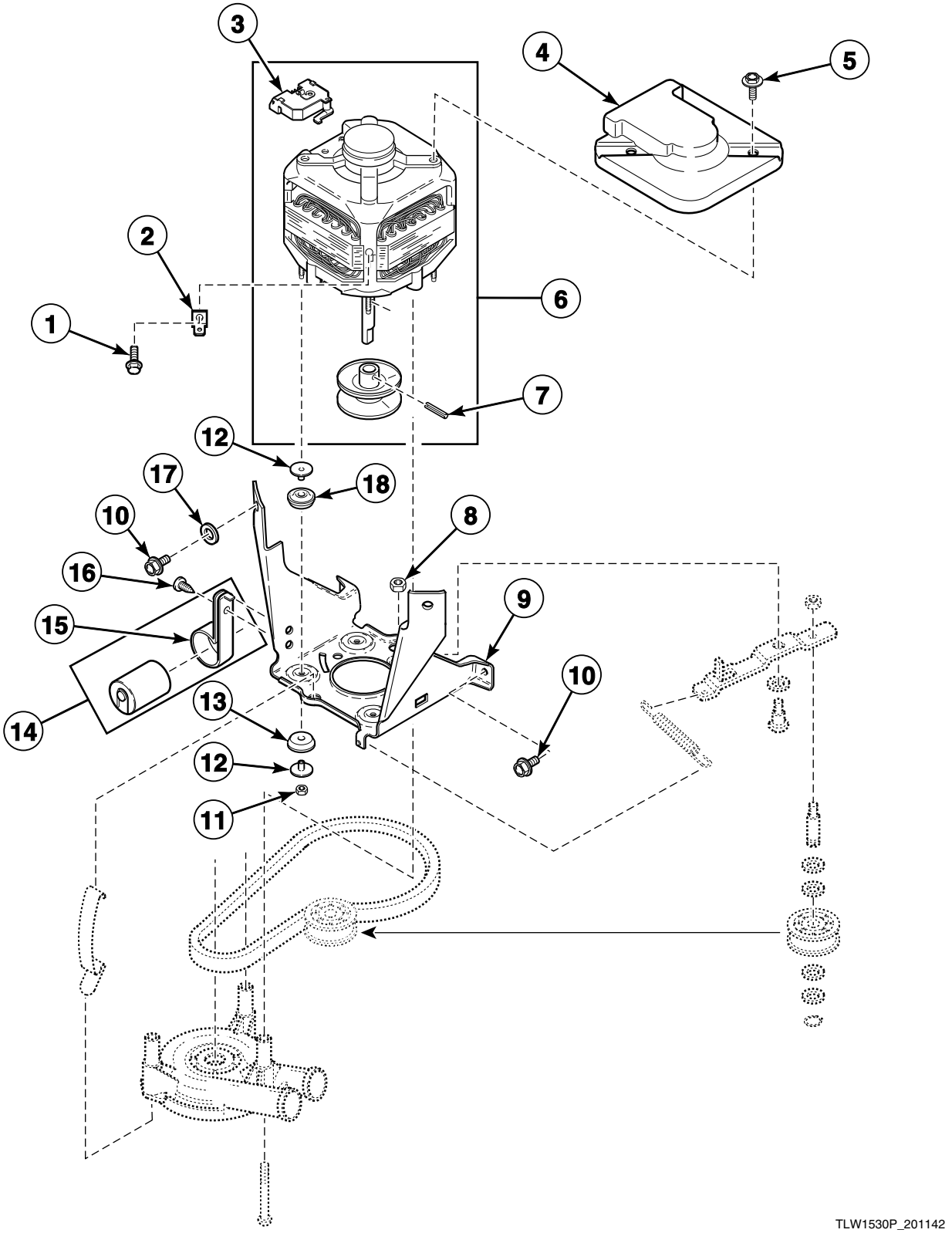

© Copyright, Alliance Laundry Systems LLC – DO NOT COPY or TRANSMIT

Motor and Mounting Bracket (Drawing 1 of 3)

REF	PART NO.	DESCRIPTION	COMMENTS
1	20530	Screw	Model LWS11A*-3062 starting Serial No. 0210012292; Model LWS21A*-3062 starting Serial No. 0210014993; Models LWS11N*-3062 and LWS21N*-3062
2	00177	Male Tab Terminal	Model LWS11A*-3062 starting Serial No. 0210012292; Model LWS21A*-3062 starting Serial No. 0210014993; Models LWS11N*-3062 and LWS21N*-3062
3	N/A	Motor Switch	
4	35886	Motor Shield	
5	36639	Screw	
6	835P3	Motor Kit	1 speed; 240 Volt/50 Hertz
7	10416	Roll Pin	Models through Serial No. 0011013645
8	52566	Nut	
9	200941	Motor Mount Bracket	
10	35369	Screw	
11	35423	Nut	
12	38325	Isolator Post	
13	204062	Isolator Assembly	
14	39259P	Capacitor and Clamp Kit	Includes item 15; Model LWS11A*-3062 starting Serial No. 0210012292; Model LWS21A*-3062 starting Serial No. 0210014993; Models LWS11N*-3062 and LWS21N*-3062
15	37535	Capacitor Clamp	Model LWS11A*-3062 starting Serial No. 0210012292; Model LWS21A*-3062 starting Serial No. 0210014993; Models LWS11N*-3062 and LWS21N*-3062
16	52909	Screw	Model LWS11A*-3062 starting Serial No. 0210012292; Model LWS21A*-3062 starting Serial No. 0210014993; Models LWS11N*-3062 and LWS21N*-3062
17	37772	Washer	
18	204449	Motor Mount	

*** Add Letter To Designate Color. L - Almond Q - Bisque W - White**
N/A = Part no longer available

© Copyright, Alliance Laundry Systems LLC – DO NOT COPY or TRANSMIT

Belt, Pump and Idler Assembly (Drawing 1 of 4)

Models LWS11A*-3062, LWS11N*-3062, LWS21A*-3062 and LWS21N*-3062

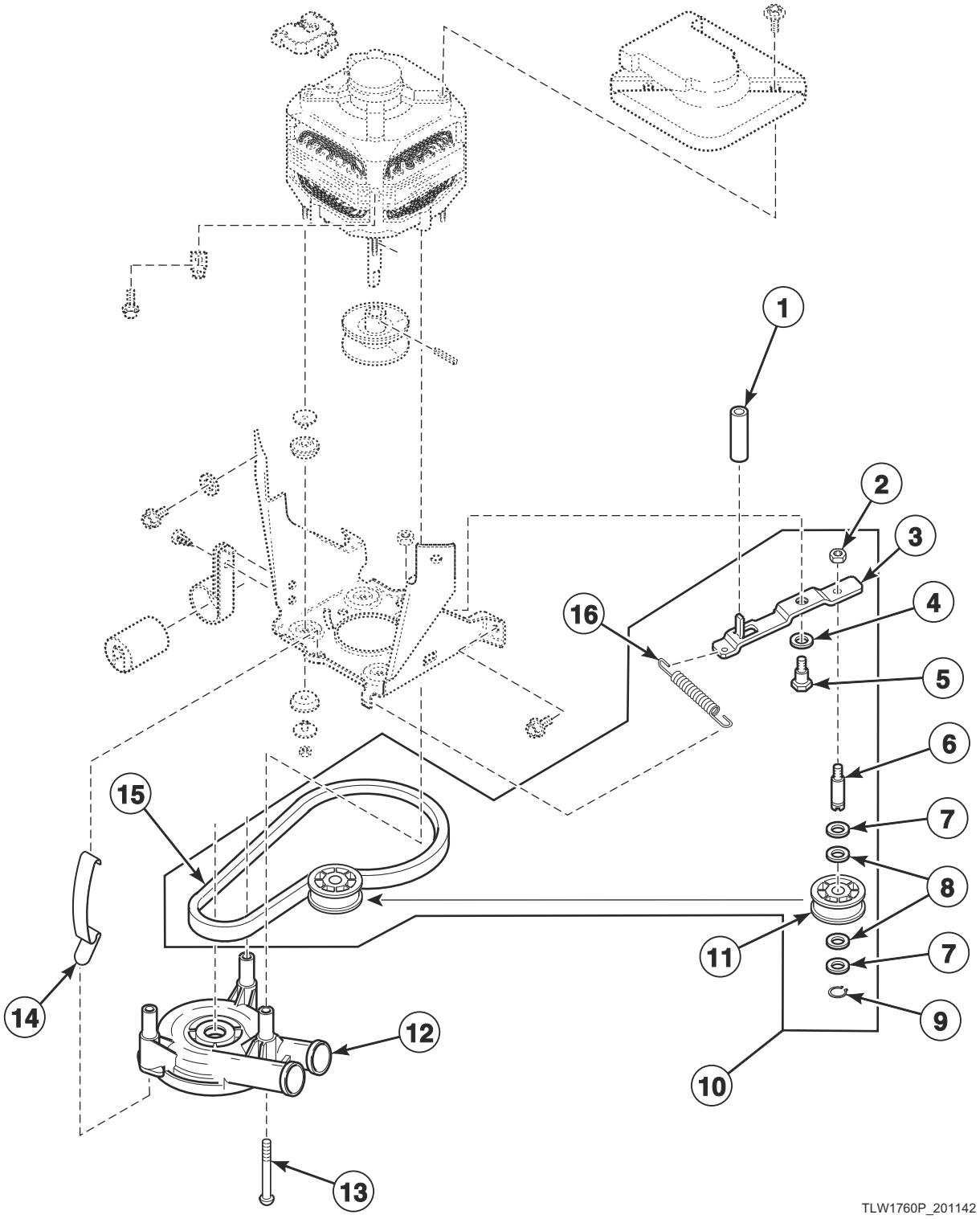

© Copyright, Alliance Laundry Systems LLC – DO NOT COPY or TRANSMIT

Belt, Pump and Idler Assembly (Drawing 1 of 4)

REF	PART NO.	DESCRIPTION	COMMENTS
1	202333	Tube	Models starting Serial Nos. beginning 1312
2	28803	Nut	
3	38011	Idler Lever	
4	81392	Washer	
5	27229	Screw	
6	56461P	Shaft	Models through Serial No. 0107000541
	210186	Idler Shaft	Models starting Serial No. 0107000542
7	D504082	Washer	Models starting Serial No. 0107000542
8	52549	Washer	Nylatron
9	23748	Retaining Ring	
10	202972	Idler Lever and Belt Kit	Models starting Serial No. 0011003354
11	38225P	Idler Pulley	
12	201566P	Pump	Model LWS11A*-3062 starting Serial No. 0007000816; Model LWS21A*-3062 starting Serial No. 0004002934; Models LWS11N*-3062 and LWS21N*-3062
13	34565	Screw	Models through Serial No. 0204019086
14	210202	Spring Clip	Models starting Serial No. 0204019087
15	38749	Agitate and Spin Belt	Models through Serial No. 0011003353
	200923	Agitate and Spin Belt	Models starting Serial No. 0011003354
16	201189	Idler Lever Spring	Models LWS11N*-3062 and LWS21N*-3062 through Serial Nos. beginning 0401 and starting again at Serial No. 0402011701
	39666	Idler Lever Spring	All other models
	202032	Idler Lever Spring	Use on units experiencing low RPM

*** Add Letter To Designate Color. L - Almond Q - Bisque W - White**

© Copyright, Alliance Laundry Systems LLC – DO NOT COPY or TRANSMIT

Motor and Mounting Bracket (Drawing 2 of 3)

Models AWN552SN301AW01, AWN552SN301NW22, AWN552SN301NW29, AWNA62SN301AW01, FWN311SP301NW10, FWN311SP301NW22, LWG74A*-3050, LWK23A*-3050, LWK24A*-3050, LWK24N*-3050, LWK73A*-3050, LWK74A*-3050, LWK74N*-3050, LWN311SP301NW22, LWN311WP301NW22, LWN312SP301AW01, LWS16M*-3000, LWS16M*-3022, LWS16N*-3022, LWS17A*-3050, LWS17M*-3022, LWS17M*-3050, LWS17N*-3022, LWS42M*-3050, LWS42N*-3050 and LWZ17N*-3022

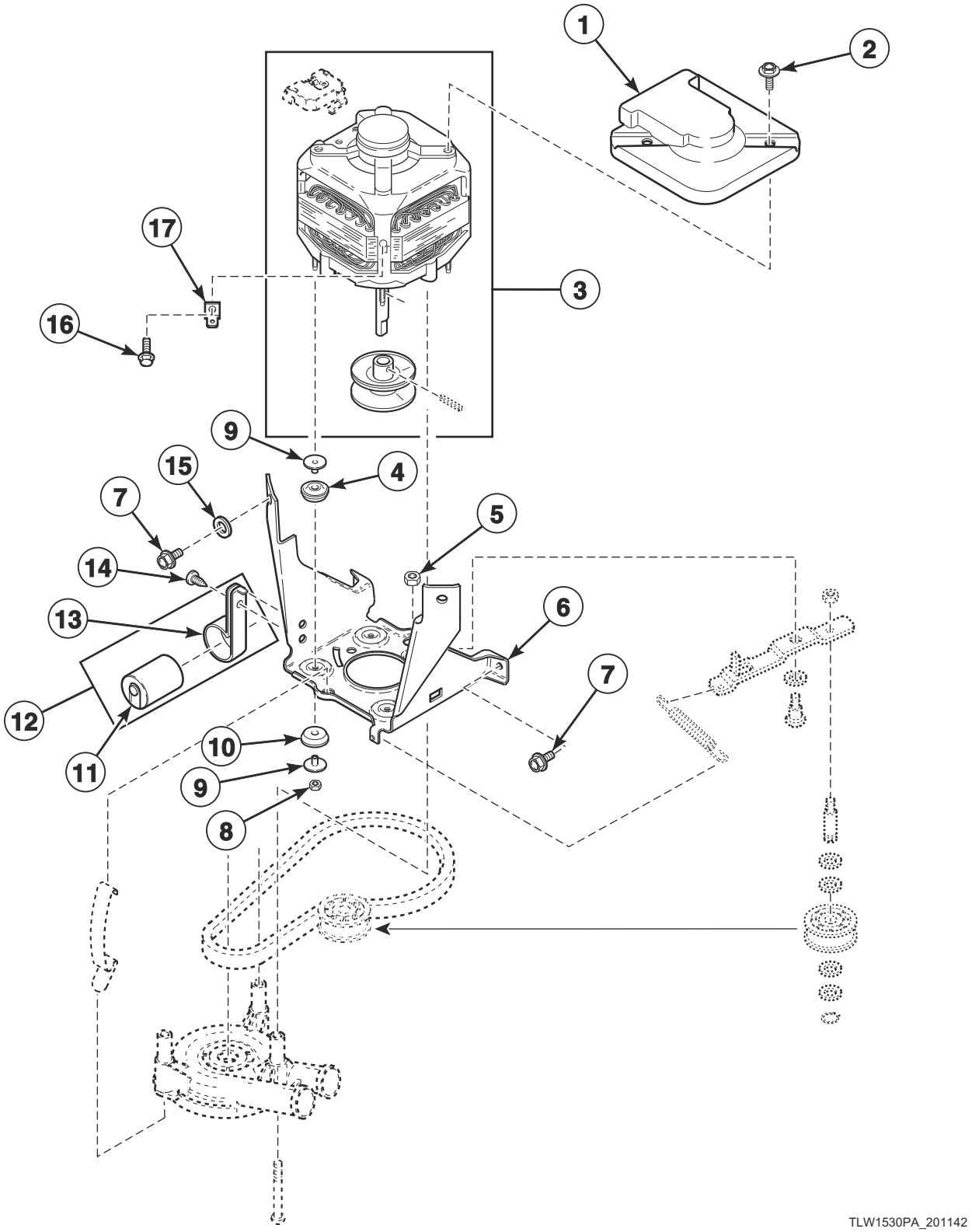

© Copyright, Alliance Laundry Systems LLC – DO NOT COPY or TRANSMIT

Motor and Mounting Bracket (Drawing 2 of 3)

REF	PART NO.	DESCRIPTION	COMMENTS
1	35886	Motor Shield	Models AWNA62SN301AW01 and LWS42N*-3050; Starting Serial No. 1404009801
	34754	Motor Shield	Models AWNA62SN301AW01 and LWS42N*-3050 through Serial No. 1404009800; All other models
2	36639	Screw	
3	201433P	Motor Kit	2 speed; 240 Volt/50 Hertz; Models AWN552SN301AW01, AWN552SN301NW22, AWN552SN301NW29, LWK74A*-3050, LWK74N*-3050, LWN312SP301AW01, LWS42M*-3050 and LWS42N*-3050
	835P3	Motor Kit	1 speed; 240 Volt/50 Hertz; Models FWN311SP301NW10, FWN311SP301NW22, LWG74A*-3050, LWK23A*-3050, LWK24A*-3050, LWK24N*-3050, LWK73A*-3050, LWN311SP301NW22, LWN311WP301NW22, LWS16M*-3000, LWS16M*-3022, LWS16N*-3022, LWS17A*-3050, LWS17M*-3022, LWS17M*-3050, LWS17N*-3022 and LWZ17N*-3022
	202544P	Motor Assembly	2 speed; 240 Volt/50 Hertz; Model AWNA62SN301AW01
4	204062	Isolator Assembly	
5	52566	Nut	
6	200941	Motor Mount Bracket	
7	35369	Screw	
8	35423	Nut	
9	38325	Isolator Post	
10	204062	Isolator Assembly	
11	203140	Capacitor	Model AWNA62SN301AW01; Starting Serial No. 1404009801
12	39259P	Capacitor and Clamp Kit	Includes item 13; Model LWK24A*-3050 starting Serial No. 0210015171; Model AWNA62SN301AW01 through Serial No. 1404009800; Models FWN311SP301NW10, FWN311SP301NW22, LWK24N*-3050, LWN311SP301NW22, LWN311WP301NW22, LWS17N*-3022 and LWZ17N*-3022
13	37535	Capacitor Clamp	Model LWK24A*-3050 starting Serial No. 0210015171; Models AWNA62SN301AW01, FWN311SP301NW10, FWN311SP301NW22, LWK24N*-3050, LWN311SP301NW22, LWN311WP301NW22, LWS17N*-3022 and LWZ17N*-3022
14	52909	Screw	Model LWK24A*-3050 starting Serial No. 0210015171; Models AWNA62SN301AW01, FWN311SP301NW10, FWN311SP301NW22, LWK24N*-3050, LWN311SP301NW22, LWN311WP301NW22, LWS17N*-3022 and LWZ17N*-3022
15	37772	Washer	
16	20530	Screw	Models LWG74A*-3050, LWK23A*-3050, LWK24A*-3050, LWK24N*-3050, LWK73A*-3050, LWK74A*-3050, LWK74N*-3050, LWS17A*-3050, LWS17M*-3050, LWS42M*-3050 and LWS42N*-3050 starting Serial Nos. beginning 0002; Models LWS16M*-3000, LWS16M*-3022 and LWS17M*-3022 starting Serial Nos. beginning 0302; Models AWN552SN301AW01, AWN552SN301NW22, AWN552SN301NW29, AWNA62SN301AW01, FWN311SP301NW10, FWN311SP301NW22, LWN311SP301NW22, LWN311WP301NW22, LWN312SP301AW01, LWS16N*-3022, LWS17N*-3022 and LWZ17N*-3022
17	00177	Male Tab Terminal	Models LWG74A*-3050, LWK23A*-3050, LWK24A*-3050, LWK24N*-3050, LWK73A*-3050, LWK74A*-3050, LWK74N*-3050, LWS17A*-3050, LWS17M*-3050, LWS42M*-3050 and LWS42N*-3050 starting Serial Nos. beginning 0002; Models LWS16M*-3000, LWS16M*-3022 and LWS17M*-3022 starting Serial Nos. beginning 0302; Models AWN552SN301AW01, AWN552SN301NW22, AWN552SN301NW29, AWNA62SN301AW01, FWN311SP301NW10, FWN311SP301NW22, LWN311SP301NW22, LWN311WP301NW22, LWN312SP301AW01, LWS16N*-3022, LWS17N*-3022 and LWZ17N*-3022

*** Add Letter To Designate Color. L - Almond Q - Bisque W - White**

© Copyright, Alliance Laundry Systems LLC – DO NOT COPY or TRANSMIT

Belt, Pump and Idler Assembly (Drawing 2 of 4)

Models AWN552SN301AW01, AWN552SN301NW22, AWN552SN301NW29, AWNA62SN301AW01, FWN311SP301NW10, FWN311SP301NW22, LWG74A*-3050, LWK23A*-3050, LWK24A*-3050, LWK24N*-3050, LWK73A*-3050, LWK74A*-3050, LWK74N*-3050, LWN311SP301NW22, LWN311WP301NW22, LWN312SP301AW01, LWS16M*-3000, LWS16M*-3022, LWS16N*-3022, LWS17A*-3050, LWS17M*-3022, LWS17M*-3050, LWS17N*-3022, LWS42M*-3050, LWS42N*-3050 and LWZ17N*-3022

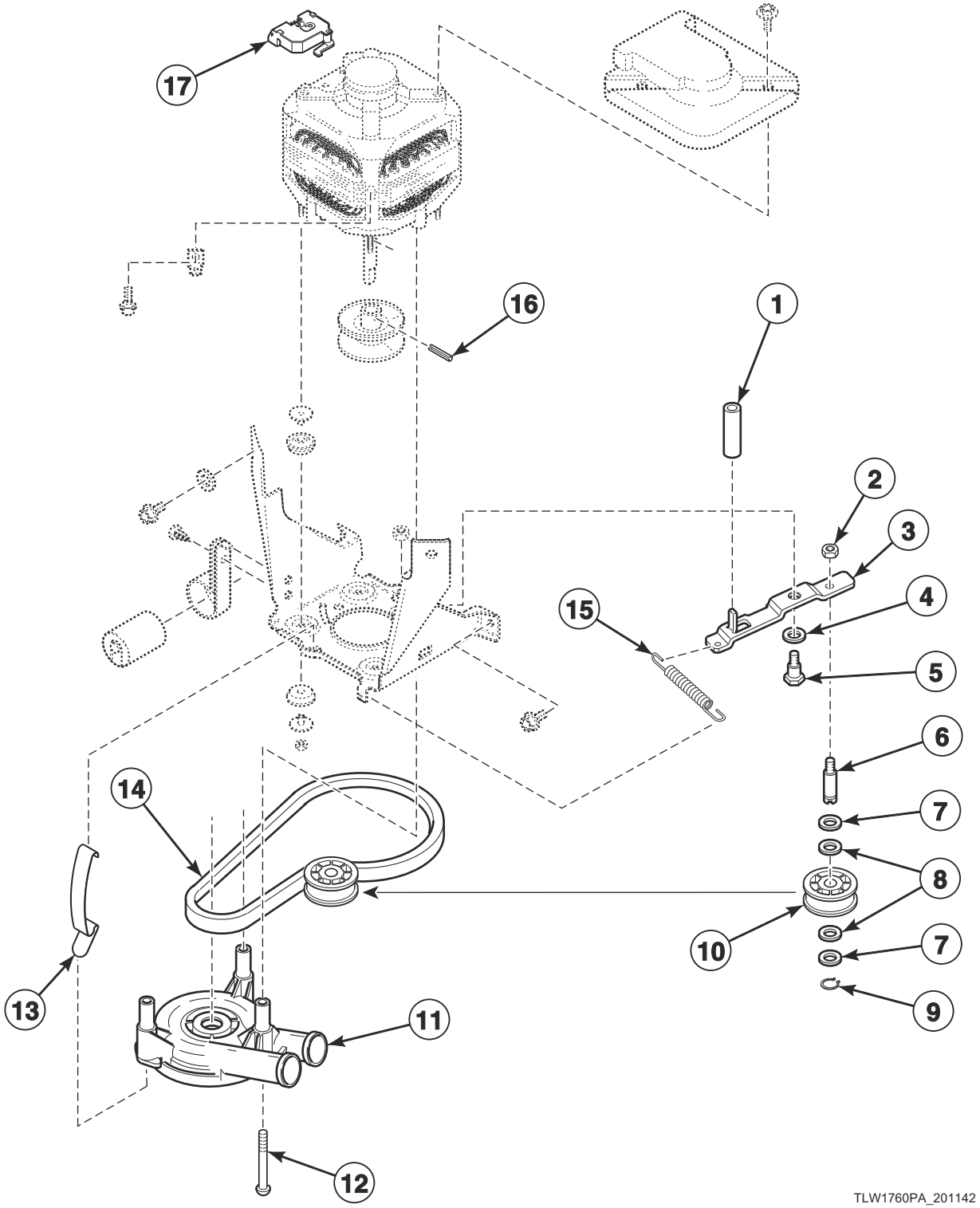

© Copyright, Alliance Laundry Systems LLC – DO NOT COPY or TRANSMIT

Belt, Pump and Idler Assembly (Drawing 2 of 4)

REF	PART NO.	DESCRIPTION	COMMENTS
1	202333	Tube	Models AWNA62SN301AW01 and LWS42N*-3050; Starting Serial Nos. beginning 1312
2	28803	Nut	
3	38011	Idler Lever	
4	81392	Washer	
5	27229	Screw	
6	56461P	Shaft	Models through Serial No. 0107000541
	210186	Idler Shaft	Models starting Serial No. 0107000542
7	D504082	Washer	Models starting Serial No. 0107000542
8	52549	Washer	Nylatron
9	23748	Retaining Ring	
10	38225P	Idler Pulley	
11	201566P	Pump	All models except AWN552SN301AW01, AWN552SN301NW22, AWN552SN301NW29, AWNA62SN301AW01, LWG74A*-3050, LWK23A*-3050, LWK24A*-3050, LWK24N*-3050, LWK73A*-3050, LWK74A*-3050 and LWK74N*-3050
12	34565	Screw	Models through Serial No. 0204019086
13	210202	Spring Clip	Models starting Serial No. 0204019087
14	39435	Agitate and Spin Belt	Models LWK24A*-3050 and LWK74A*-3050; Models LWK24N*-3050 and LWK74N*-3050 through Serial No. 0401002012
	38749	Agitate and Spin Belt	Models LWG74A*-3050, LWK23A*-3050, LWK73A*-3050, LWS16M*-3000, LWS16M*-3022, LWS16N*-3022, LWS17A*-3050, LWS17M*-3022, LWS17M*-3050, LWS17N*-3022, LWS42M*-3050, LWS42N*-3050 and LWZ17N*-3022 through Serial No. 0011003353
	200923	Agitate and Spin Belt	Models AWN552SN301AW01, AWN552SN301NW22, AWN552SN301NW29, AWNA62SN301AW01, FWN311SP301NW10, FWN311SP301NW22, LWN311SP301NW22, LWN311WP301NW22 and LWN312SP301AW01; Models LWK24N*-3050 and LWK74N*-3050 starting Serial No. 0401002013; Models LWG74A*-3050, LWK23A*-3050, LWK73A*-3050, LWS16M*-3000, LWS16M*-3022, LWS16N*-3022, LWS17A*-3050, LWS17M*-3022, LWS17M*-3050, LWS17N*-3022, LWS42M*-3050, LWS42N*-3050 and LWZ17N*-3022 starting Serial No. 0011003354
15	201189	Idler Lever Spring	Models FWN311SP301NW10, FWN311SP301NW22, LWN311SP301NW22, LWN311WP301NW22 and LWN312SP301AW01; Models LWS16N*-3022, LWS17N*-3022, LWS42N*-3050 and LWZ17N*-3022 through Serial Nos. beginning 0401 and starting again at Serial No. 0402011701; Models LWK24N*-3050 and LWK74N*-3050 starting Serial No. 0401002013 and continuing through Serial No. 0801000182
	202032	Idler Lever Spring	Models AWN552SN301AW01, AWN552SN301NW22, AWN552SN301NW29 and AWNA62SN301AW01; Models LWK24N*-3050 and LWK74N*-3050 starting serial No. 0801000183
	39666	Idler Lever Spring	All other models
	202032	Idler Lever Spring	Use on units experiencing low RPM
16	10416	Roll Pin	Models through Serial No. 0011013645
17	N/A	Motor Switch	

*** Add Letter To Designate Color. L - Almond Q - Bisque W - White**

N/A = Part no longer available

© Copyright, Alliance Laundry Systems LLC – DO NOT COPY or TRANSMIT

Belt, Pump and Idler Assembly (Drawing 3 of 4)

Models AWN552SN301AW01, AWN552SN301NW22, AWN552SN301NW29, AWNA62SN301AW01, FWN311SP301NW10, FWN311SP301NW22, LWG74A*-3050, LWK23A*-3050, LWK24A*-3050, LWK24N*-3050, LWK73A*-3050, LWK74A*-3050, LWK74N*-3050, LWN311SP301NW22, LWN311WP301NW22, LWN312SP301AW01, LWS16M*-3000, LWS16M*-3022, LWS16N*-3022, LWS17A*-3050, LWS17M*-3022, LWS17M*-3050, LWS17N*-3022, LWS42M*-3050, LWS42N*-3050 and LWZ17N*-3022

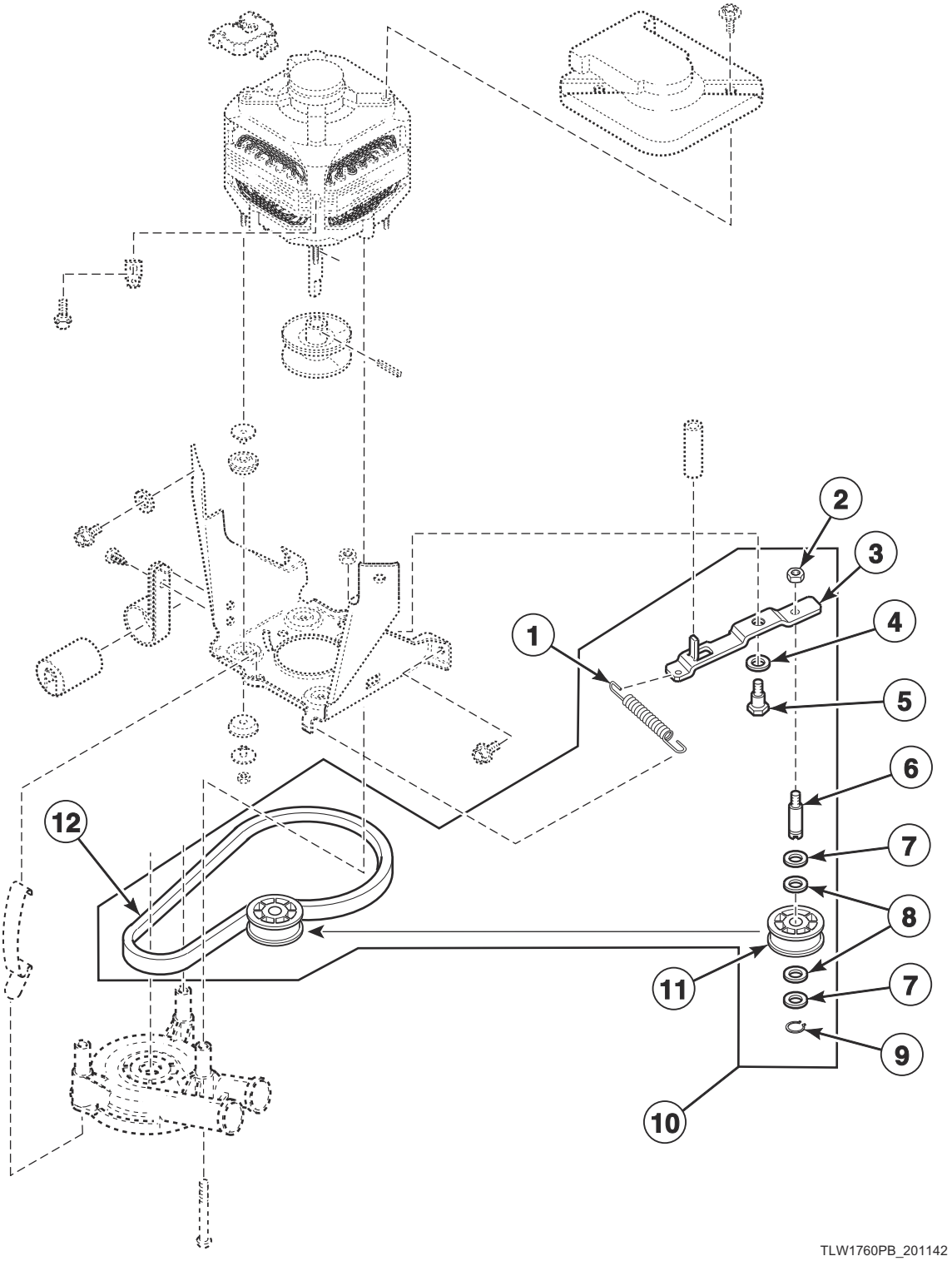

© Copyright, Alliance Laundry Systems LLC – DO NOT COPY or TRANSMIT

Belt, Pump and Idler Assembly (Drawing 3 of 4)

REF	PART NO.	DESCRIPTION	COMMENTS
1	201189	Idler Lever Spring	Models FWN311SP301NW10, FWN311SP301NW22, LWN311SP301NW22, LWN311WP301NW22 and LWN312SP301AW01; Models LWS16N*-3022, LWS17N*-3022, LWS42N*-3050 and LWZ17N*-3022 through Serial Nos. beginning 0401 and starting again at Serial No. 0402011701; Models LWK24N*-3050 and LWK74N*-3050 starting Serial No. 0401002013 and continuing through Serial No. 0801000182
	202032	Idler Lever Spring	Models AWN552SN301AW01, AWN552SN301NW22, AWN552SN301NW29 and AWNA62SN301AW01; Models LWK24N*-3050 and LWK74N*-3050 starting serial No. 0801000183
	39666	Idler Lever Spring	All other models
	202032	Idler Lever Spring	Use on units experiencing low RPM
2	28803	Nut	
3	38011	Idler Lever	
4	81392	Washer	
5	27229	Screw	
6	56461P	Shaft	Models through Serial No. 0107000541
	210186	Idler Shaft	Models starting Serial No. 0107000542
7	D504082	Washer	Models starting Serial No. 0107000542
8	52549	Washer	Nylatron
9	23748	Retaining Ring	
10	202972	Idler Lever and Belt Kit	Models AWN552SN301AW01, AWN552SN301NW22, AWN552SN301NW29, AWNA62SN301AW01, FWN311SP301NW10, FWN311SP301NW22, LWN311SP301NW22, LWN311WP301NW22 and LWN312SP301AW01; Models LWK24N*-3050 and LWK74N*-3050 starting Serial No. 0401002013; Models LWG74A*-3050, LWK23A*-3050, LWK73A*-3050, LWS16M*-3000, LWS16M*-3022, LWS16N*-3022, LWS17A*-3050, LWS17M*-3022, LWS17M*-3050, LWS17N*-3022, LWS42M*-3050, LWS42N*-3050 and LWZ17N*-3022 starting Serial No. 0011003354
11	38225P	Idler Pulley	
12	39435	Agitate and Spin Belt	Models LWK24A*-3050 and LWK74A*-3050; Models LWK24N*-3050 and LWK74N*-3050 through Serial No. 0401002012
	38749	Agitate and Spin Belt	Models LWG74A*-3050, LWK23A*-3050, LWK73A*-3050, LWS16M*-3000, LWS16M*-3022, LWS16N*-3022, LWS17A*-3050, LWS17M*-3022, LWS17M*-3050, LWS17N*-3022, LWS42M*-3050, LWS42N*-3050 and LWZ17N*-3022 through Serial No. 0011003353
	200923	Agitate and Spin Belt	Models AWN552SN301AW01, AWN552SN301NW22, AWN552SN301NW29, AWNA62SN301AW01, FWN311SP301NW10, FWN311SP301NW22, LWN311SP301NW22, LWN311WP301NW22 and LWN312SP301AW01; Models LWK24N*-3050 and LWK74N*-3050 starting Serial No. 0401002013; Models LWG74A*-3050, LWK23A*-3050, LWK73A*-3050, LWS16M*-3000, LWS16M*-3022, LWS16N*-3022, LWS17A*-3050, LWS17M*-3022, LWS17M*-3050, LWS17N*-3022, LWS42M*-3050, LWS42N*-3050 and LWZ17N*-3022 starting Serial No. 0011003354

*** Add Letter To Designate Color. L - Almond Q - Bisque W - White**

© Copyright, Alliance Laundry Systems LLC – DO NOT COPY or TRANSMIT

Motor and Mounting Bracket (Drawing 3 of 3)

All Models Except AWN552SN301AW01, AWN552SN301NW22, AWN552SN301NW29, AWNA62SN301AW01, FWN311SP301NW10, FWN311SP301NW22, LWG74A*-3050, LWK23A*-3050, LWK24A*-3050, LWK24N*-3050, LWK73A*-3050, LWK74A*-3050, LWK74N*-3050, LWN311SP301NW22, LWN311WP301NW22, LWN312SP301AW01, LWS11A*-3062, LWS11N*-3062, LWS16M*-3000, LWS16M*-3022, LWS16N*-3022, LWS17A*-3050, LWS17M*-3022, LWS17M*-3050, LWS17N*-3022, LWS21A*-3062, LWS21N*-3062, LWS42M*-3050, LWS42N*-3050, LWZ17N*-3022, LWZ77M*-1102 and LWZ77N*-1102

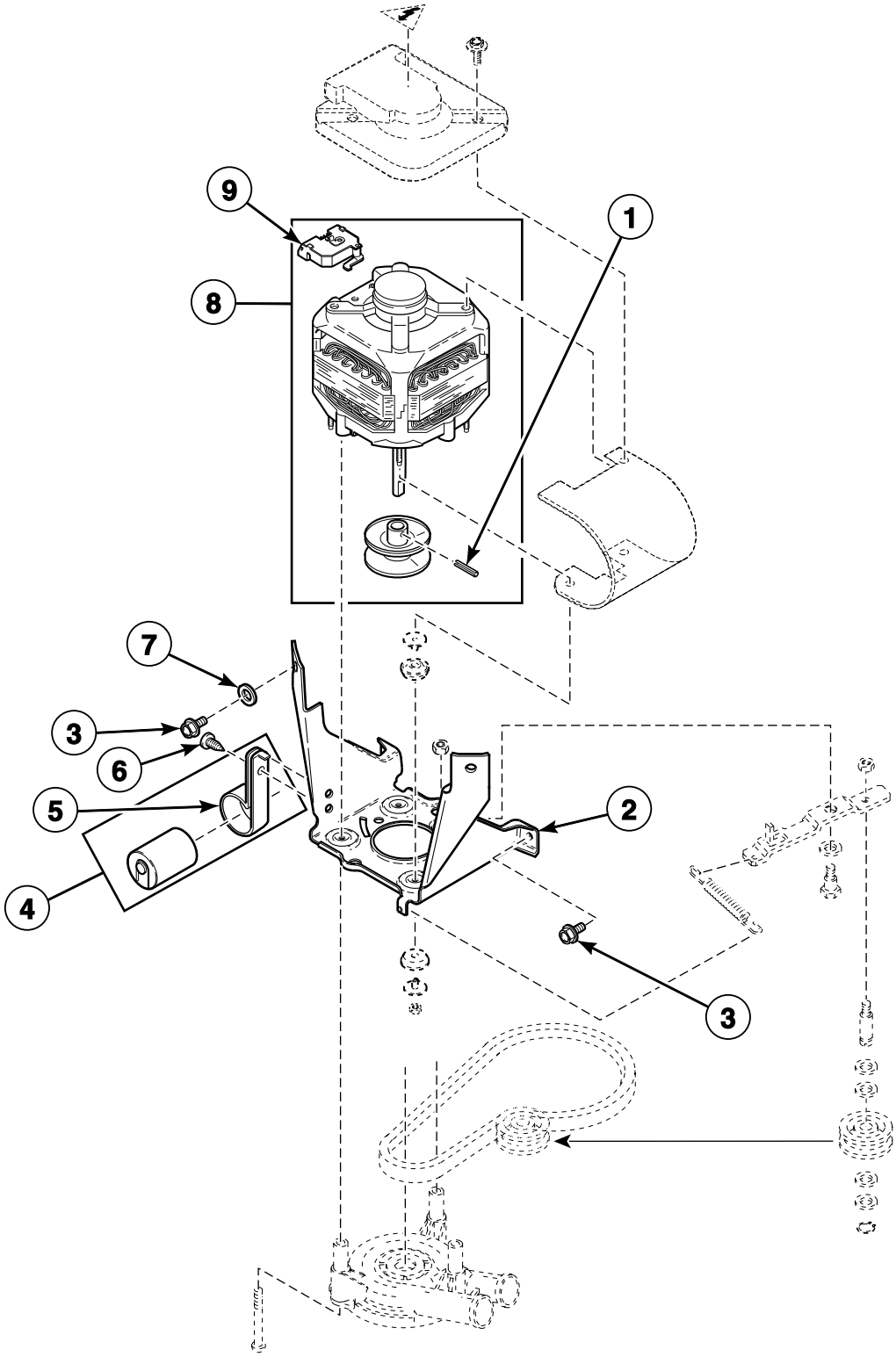

© Copyright, Alliance Laundry Systems LLC – DO NOT COPY or TRANSMIT

Motor and Mounting Bracket (Drawing 3 of 3)

REF	PART NO.	DESCRIPTION	COMMENTS
1	10416	Roll Pin	Models through Serial No. 0011013645
2	200941	Motor Mount Bracket	
3	35369	Screw	
4	39259P	Capacitor and Clamp Kit	Includes item 5; Use with 200648P Motor Assembly; Included with 835P3 Motor Kit
	37377	Capacitor	Models DWN412SP111CW01, LWN412SP111MW33, ZWN402PP111CW01, ZWN412SP111CW01 and ZWN432SP111CW01; Models AWZ44N*-1102, AWZ51N*-1102, CWN412SP111CW01, LWD51N*-1100, LWS45N*-1127, LWS45N*-1130 and LWS52N*-1127 starting Serial Nos. beginning 0904
5	37535	Capacitor Clamp	
6	52909	Screw	
7	37772	Washer	
8	35030P	Motor Assembly	1 speed; 240 Volt/50 or 60 Hertz; Models LWH16N*-3322, LWH18A*-3322, LWH18N*-3322, LWN311SP331NW22, LWN311SP541NW23, LWN311SP541RW01, LWN311WP331NW22, LWN311WP541NW23, LWN311WP541RW01, LWS01A*-3300, LWS01M*-3300, LWS01N*-3300, LWS16A*-3300, LWS16A*-3322, LWS16M*-3300, LWS16M*-3322, LWS16N*-3322, LWS16N*-5423, LWS17A*-3300, LWS17A*-3322, LWS17M*-3300, LWS17M*-3322, LWS17N*-3300, LWS17N*-3322, LWS17N*-5423, LWZ20M*-3300, LWZ20N*-3300 and YWN321SP541RW01
	201615P	Motor Kit	2 speed; 120 Volt/60 Hertz; Models AWZ44N*-1102, AWZ51N*-1102, CWN412SP111CW01, LWD51N*-1100, LWS45N*-1127, LWS45N*-1130 and LWS52N*-1127 through Serial Nos. beginning 0904; Models AWZ45N*-1102, AWZ52N*-1102, LWB19A*-1109, LWB19B*-1109, LWB19M*-1109, LWD52M*-1100, LWD52N*-1100, LWS45M*-1127, LWT42N*-1100, LWT52N*-1100, LWY45A*-1109, LWY45B*-1109, LWY45M*-1109, LWZ22M*-1102, LWZ22N*-1102, LWZ42M*-1102, LWZ42N*-1102, LWZ52M*-1102 and LWZ52N*-1102
	38034P	Motor Kit	2 speed; 120 Volt/60 Hertz; Models DWN412SP111CW01, LWN412SP111MW33, ZWN402PP111CW01, ZWN412SP111CW01 and ZWN432SP111CW01; Models AWZ44N*-1102, AWZ51N*-1102, CWN412SP111CW01, LWD51N*-1100, LWS45N*-1127, LWS45N*-1130 and LWS52N*-1127 starting Serial Nos. beginning 0904
	38036P	Motor Kit	1 speed; 115 Volt/60 Hertz; Models AWZ17N*-1102, CWN311SP111CW01, LWN311PP111NW22, LWN311SP111NW22, LWN311SP111TW05, LWN311WP111NW22, LWS02N*-1122, LWS16A*K, LWS16B*K, LWS16M*K, LWS16N*-1122, LWS16N*K, LWS17A*K, LWS17B*K, LWS17M*-1127, LWS17M*K, LWS17N*-1122, LWS17N*-1127, LWS17N*K, LWY17A*-1109, LWY17B*-1109, LWZ01M*-1102, LWZ01N*-1102, LWZ02N*-1102, MWN311SP111TW06, YWN311PP111CW01 and ZWN311SP111CW01
	835P3	Motor Kit	1 speed; 240 Volt/50 Hertz; Models LWS17A*B3020, LWS17A*B3069, LWS17M*B3020, LWS17M*B3069, LWS17N*B3020, LWS17N*B3069, LWZ17A*B3020, LWZ17A*B3069, LWZ17M*B3020, LWZ17M*B3069, LWZ17N*B3020 and LWZ17N*B3069 through Serial Nos. beginning 0102 and starting again Serial Nos. beginning 0311; Models LWS01A*-3088, LWS16A*-3000, LWS16A*-3022, LWS17A*-3000, LWS17A*-3022, LWS17M*-3000, LWS17N*-3000, LWZ17A*-3000, LWZ17M*-3000 and TWN311SP301NW22; Model LWS17N*-3028 starting Serial Nos. beginning 0311
	200645P	Motor Assembly	1 speed; 115 Volt/50 Hertz; Models LWN311SP101NW22 and LWN311WP101NW22; Models with suffix 1000 or 1088 in model number
	201434P	Motor Assembly	1 speed; 230 Volt/50 Hertz; Models LWS17A*B3020, LWS17A*B3069, LWS17M*B3020, LWS17M*B3069, LWS17N*-3028, LWS17N*B3020, LWS17N*B3069, LWZ17A*B3020, LWZ17A*B3069, LWZ17M*B3020, LWZ17M*B3069, LWZ17N*B3020 and LWZ17N*B3069 starting Serial Nos. beginning 0102 and continuing through Serial Nos. beginning 0311; Models LWS01M*-3088, LWS01N*-3088, LWS17A*-3028, LWS17M*-3000 and LWS17N*-3000
9	N/A	Motor Switch	

*** Add Letter To Designate Color. L - Almond Q - Bisque W - White**

N/A = Part no longer available

© Copyright, Alliance Laundry Systems LLC – DO NOT COPY or TRANSMIT

Belt, Pump and Idler Assembly (Drawing 4 of 4)

All Models Except AWN552SN301AW01, AWN552SN301NW22, AWN552SN301NW29, AWNA62SN301AW01, FWN311SP301NW10, FWN311SP301NW22, LWG74A*-3050, LWK23A*-3050, LWK24A*-3050, LWK24N*-3050, LWK73A*-3050, LWK74A*-3050, LWK74N*-3050, LWN311SP301NW22, LWN311WP301NW22, LWN312SP301AW01, LWS11A*-3062, LWS11N*-3062, LWS16M*-3000, LWS16M*-3022, LWS16N*-3022, LWS17A*-3050, LWS17M*-3022, LWS17M*-3050, LWS17N*-3022, LWS21A*-3062, LWS21N*-3062, LWS42M*-3050, LWS42N*-3050, LWZ17N*-3022, LWZ77M*-1102 and LWZ77N*-1102

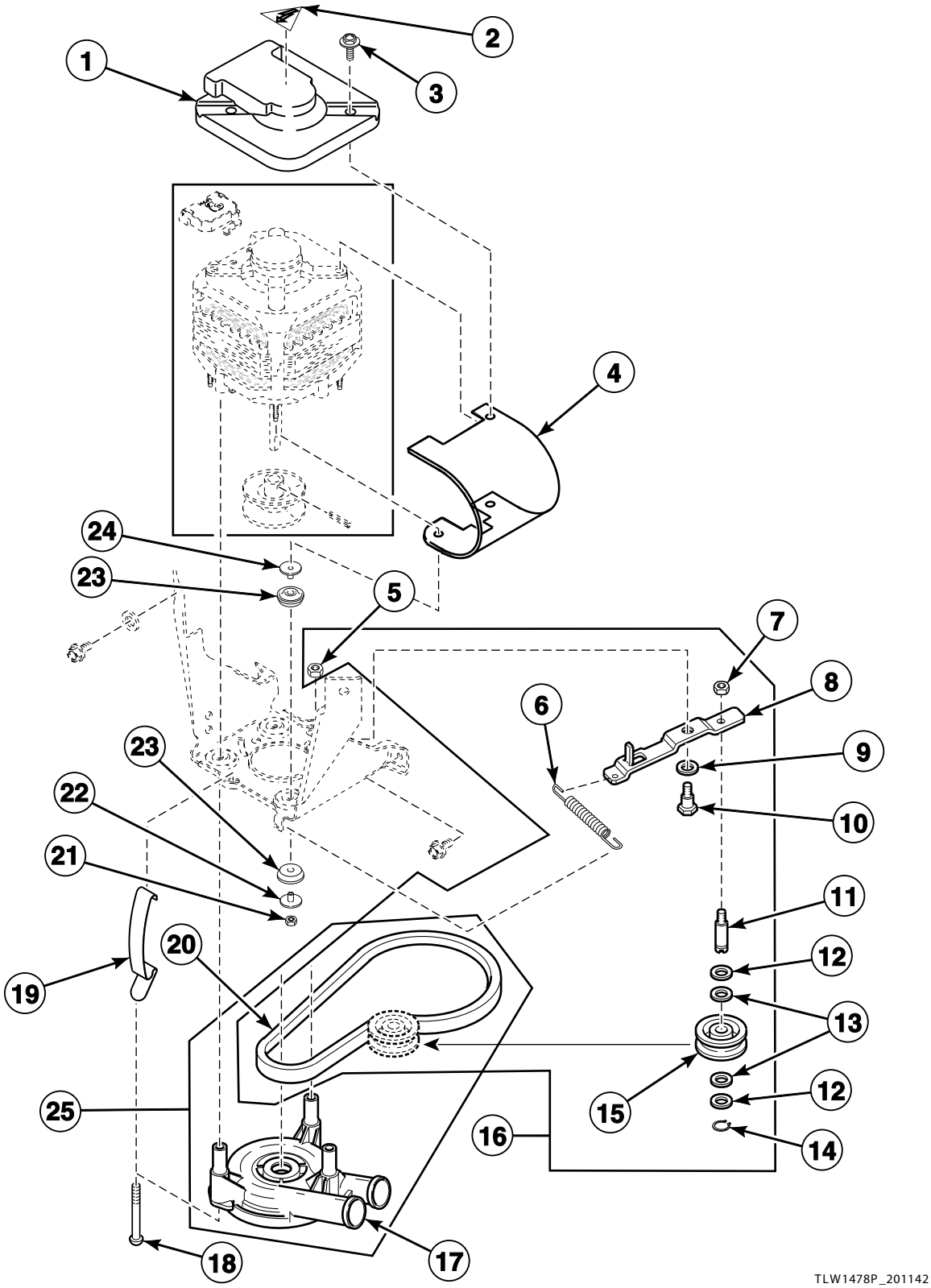

© Copyright, Alliance Laundry Systems LLC – DO NOT COPY or TRANSMIT

Belt, Pump and Idler Assembly (Drawing 4 of 4)

REF	PART NO.	DESCRIPTION	COMMENTS
1	34754	Motor Shield	
2	D502511	Electrical Shock Label	Models with suffix B3020 or B3069 in model number
3	36639	Screw	
4	36965	Motor Side Shield	Models with suffix B3020 or B3069 in model number
5	52566	Nut	
6	201189	Idler Lever Spring	All 50 Hertz models with the letter “N” in the 6th character of the model no. through Serial Nos. beginning 0401 and starting again at Serial No. 0402011701; All 60 Hertz models with the letter “N” in the 6th character of the model no. through Serial Nos. beginning 0401 and starting again at Serial No. 0510022781
	201189	Idler Lever Spring	Models LWN311SP101NW22, LWN311SP111TW05, LWN311WP101NW22 and LWN412SP111MW33; Models CWN311SP111CW01, CWN412SP111CW01, DWN412SP111CW01, LWN311PP111NW22, LWN311SP111NW22, LWN311SP331NW22, LWN311SP541NW23, LWN311SP541RW01, LWN311WP111NW22, LWN311WP331NW22, LWN311WP541NW23, LWN311WP541RW01, MWN311SP111TW06, TWN311SP301NW22, YWN311PP111CW01, YWN321SP541RW01, ZWN311SP111CW01, ZWN412SP111CW01 and ZWN432SP111CW01 through Serial Nos. beginning 1212
	202032	Idler Lever Spring	Use on units experiencing low RPM; Models CWN311SP111CW01, CWN412SP111CW01, DWN412SP111CW01, LWH16N*-3322, LWH18N*-3322, LWN311PP111NW22, LWN311SP111NW22, LWN311SP331NW22, LWN311SP541NW23, LWN311SP541RW01, LWN311WP111NW22, LWN311WP331NW22, LWN311WP541NW23, LWN311WP541RW01, LWN412SP111MW33, LWS16N*-3322, LWS17N*-3322, LWS45N*-1127, LWS45N*-1130, LWS52N*-1127, MWN311SP111TW06, YWN311PP111CW01, YWN321SP541RW01, ZWN311SP111CW01, ZWN402PP111CW01, ZWN412SP111CW01 and ZWN432SP111CW01 starting Serial Nos. beginning 1212
	39666	Idler Lever Spring	All other models
7	28803	Nut	
8	38011	Idler Lever	
9	81392	Washer	
10	27229	Screw	
11	56461P	Shaft	Models through Serial No. 0107000541
	210186	Idler Shaft	Models starting Serial No. 0107000542
12	D504082	Washer	Models starting Serial No. 0107000542
13	52549	Washer	Nylatron
14	23748	Retaining Ring	
15	38225P	Idler Pulley	
16	959P3	Idler Lever Kit	60 Hertz models with the letter “N” in the 3rd character of the model no. or with the letter “M” or “N” in the 6th character of the model no.; Includes items 5-15 (201189 Idler Lever Spring) and 38174 Agitate and Spin Belt
17	201566P	Pump	
18	34565	Screw	Models through Serial No. 0204019086
19	210202	Spring Clip	Models starting Serial No. 0204019087
20	38749	Agitate and Spin Belt	50 Hertz; Models through Serial No. 0011003353
	37820	Agitate and Spin Belt	60 Hertz; Models through Serial No. 0011003353
	200923	Agitate and Spin Belt	50 Hertz; Models starting Serial No. 0011003354
	38174	Agitate and Spin Belt	60 Hertz; Models starting Serial No. 0011003354
21	35423	Nut	
22	38325	Isolator Post	
23	204062	Isolator Assembly	
24	204449	Motor Mount	
25	RB150002	Belt and Pump Kit	Includes 37820 Agitate and Spin Belt and item 17
	RB150003	Belt and Pump Kit	Includes 38174 Agitate and Spin Belt and item 17

*** Add Letter To Designate Color. L - Almond Q - Bisque W - White**

© Copyright, Alliance Laundry Systems LLC – DO NOT COPY or TRANSMIT

Idler Lever and Belt Kit

Models LWN311SP101NW22, LWN311WP101NW22, LWS01A*-1000, LWS01A*-1088, LWS01A*-3088, LWS01M*-1000, LWS01M*-1088, LWS01M*-3088, LWS01N*-3088, LWS16A*-1000, LWS16A*-3000, LWS16A*-3022, LWS16M*-1000, LWS16N*-1000, LWS17A*-1000, LWS17A*-3000, LWS17A*-3022, LWS17A*-3028, LWS17A*B3020, LWS17A*B3069, LWS17M*-1000, LWS17M*-3000, LWS17M*B3020, LWS17M*B3069, LWS17N*-1000, LWS17N*-3000, LWS17N*-3028, LWS17N*B3020, LWS17N*B3069, LWZ16A*-1000, LWZ16M*-1000, LWZ16N*-1000, LWZ17A*-3000, LWZ17A*B3020, LWZ17A*B3069, LWZ17M*-3000, LWZ17M*B3020, LWZ17M*B3069, LWZ17N*B3020 and LWZ17N*B3069

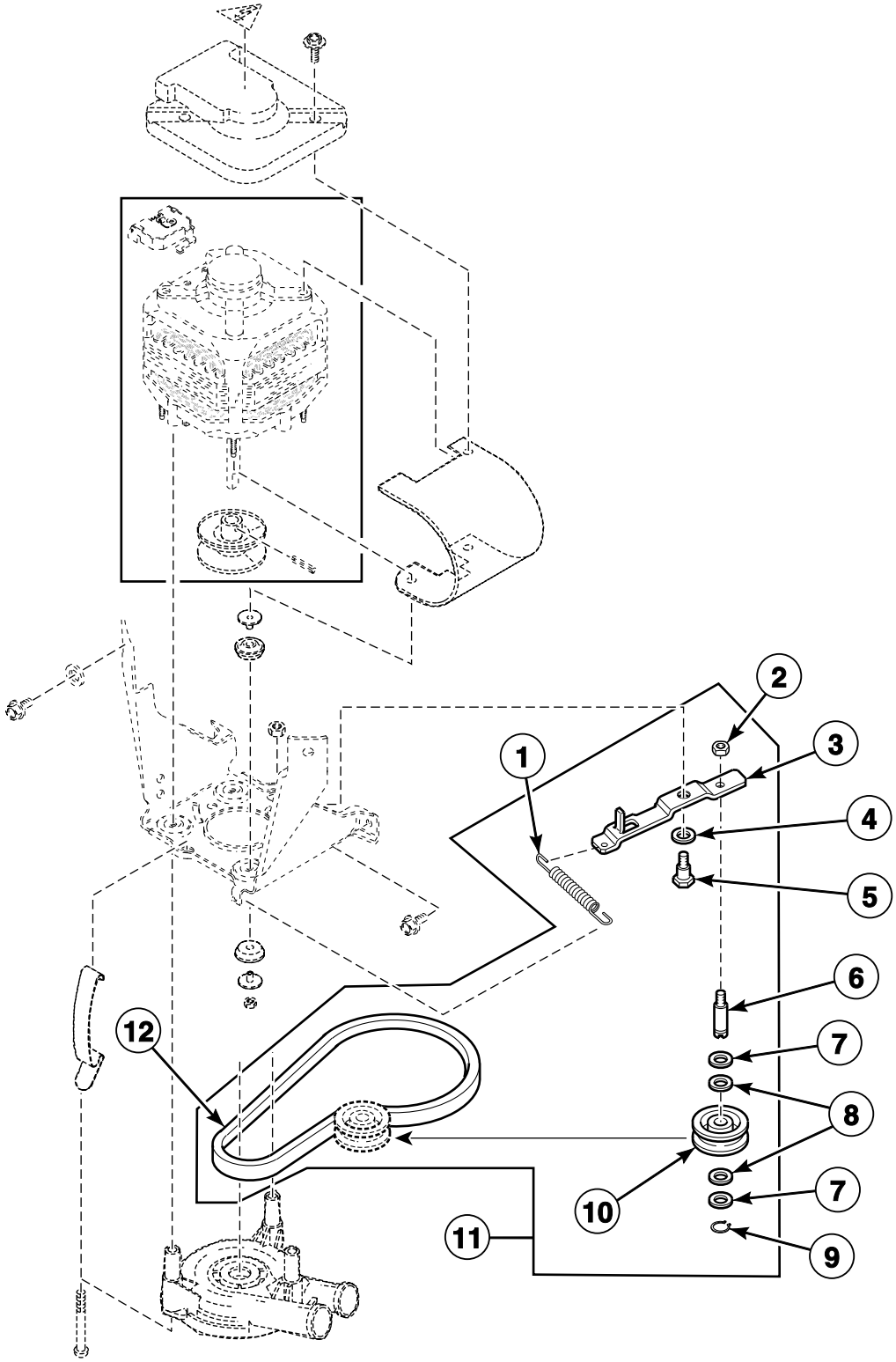

TLW1478PA_201142

© Copyright, Alliance Laundry Systems LLC – DO NOT COPY or TRANSMIT

Idler Lever and Belt Kit

REF	PART NO.	DESCRIPTION	COMMENTS
1	202032	Idler Lever Spring	
2	28803	Nut	
3	38011	Idler Lever	
4	81392	Washer	
5	27229	Screw	
6	210186	Idler Shaft	
7	D504082	Washer	
8	52549	Washer	Nylatron
9	23748	Retaining Ring	
10	38225P	Idler Pulley	
11	202972	Idler Lever and Belt Kit	
12	200923	Agitate and Spin Belt	

*** Add Letter To Designate Color. L - Almond Q - Bisque W - White**

© Copyright, Alliance Laundry Systems LLC – DO NOT COPY or TRANSMIT

Agitator, Drive Bell, Hub and Lip Seal Kit and Washtub

Models LWN311PP111NW22, LWS01N*-3088, LWS01N*-3300, LWS02N*-1122, LWZ01N*-1102, LWZ02N*-1102 and YWN311PP111CW01

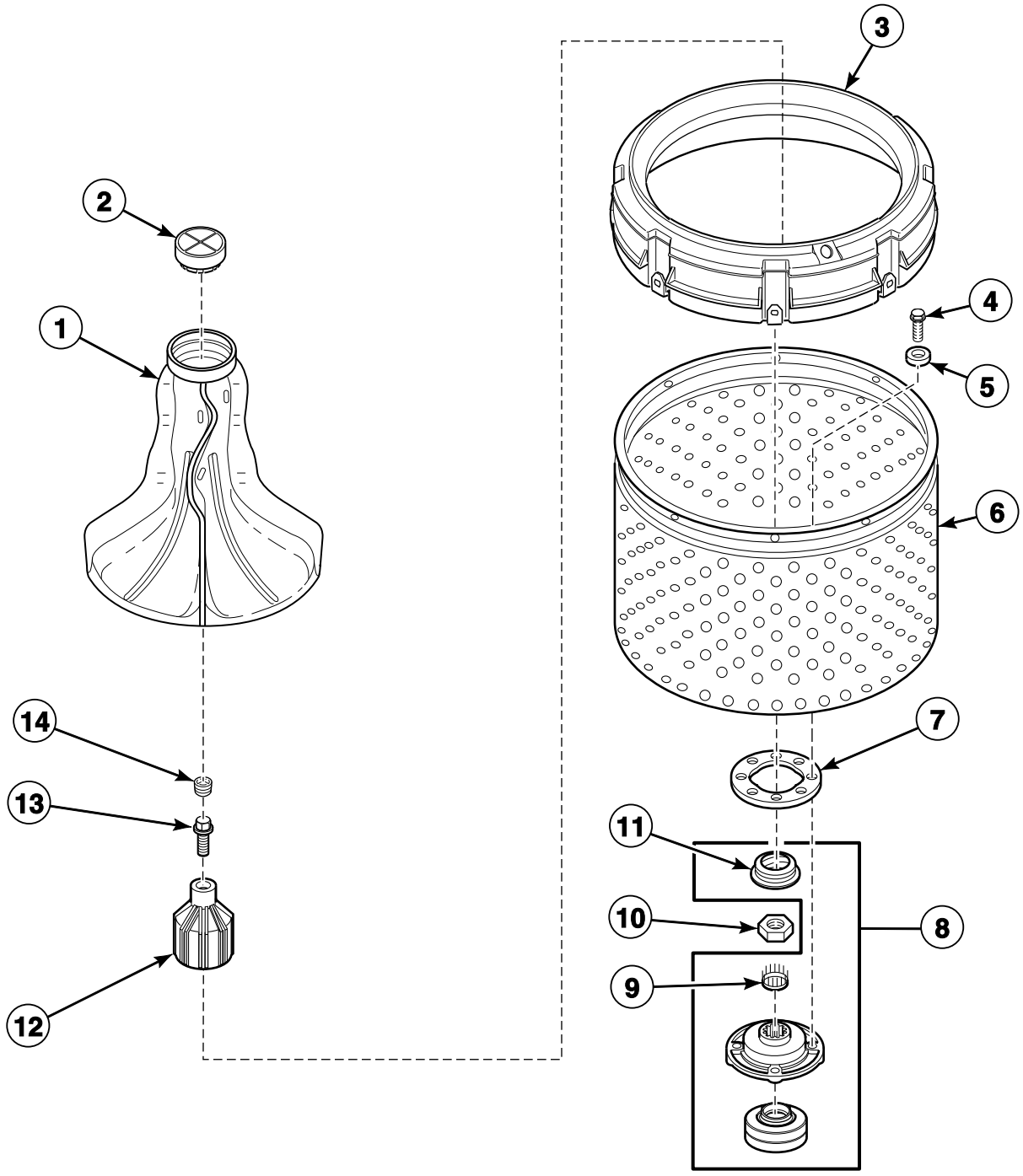

TLW1607P_201142

© Copyright, Alliance Laundry Systems LLC – DO NOT COPY or TRANSMIT

Agitator, Drive Bell, Hub and Lip Seal Kit and Washtub

REF	PART NO.	DESCRIPTION	COMMENTS
1	33174	Agitator	
2	36515	Agitator Cap	
3	39837	Balance Ring Assembly	
4	27202	Screw	
5	28094	Washer	
6	39250P	Tub Kit	Blue porcelain; Models LWN311PP111NW22, LWS02N*-1122, LWZ02N*-1102 and YWN311PP111CW01
	39252P	Tub Assembly	Blue porcelain; All other models
7	39122	Washtub Gasket	
8	766P3A	Hub and Lip Seal Kit	DO NOT use any sealant other than 200996P Sealant; Includes item 12 and installation tool
	200996P	Sealant	Use with hub and lip seal kit
9	29728	Spline Insert	
10	29220	Nut	
11	36425	Bell and Transmission Tube Seal	
12	39508P	Drive Bell and Seal Kit	Includes items 11 and 14
13	39432	Screw	
14	36511	Bell Plug	

*** Add Letter To Designate Color. L - Almond Q - Bisque W - White**

© Copyright, Alliance Laundry Systems LLC – DO NOT COPY or TRANSMIT

Agitator, Drive Bell, Hub and Seal Kit and Washtub

Models LWS01A*-1000, LWS01A*-1088, LWS01A*-3088, LWS01A*-3300,
LWS01M*-1088, LWS01M*-3088, LWS01M*-3300 and LWZ01M*-1102

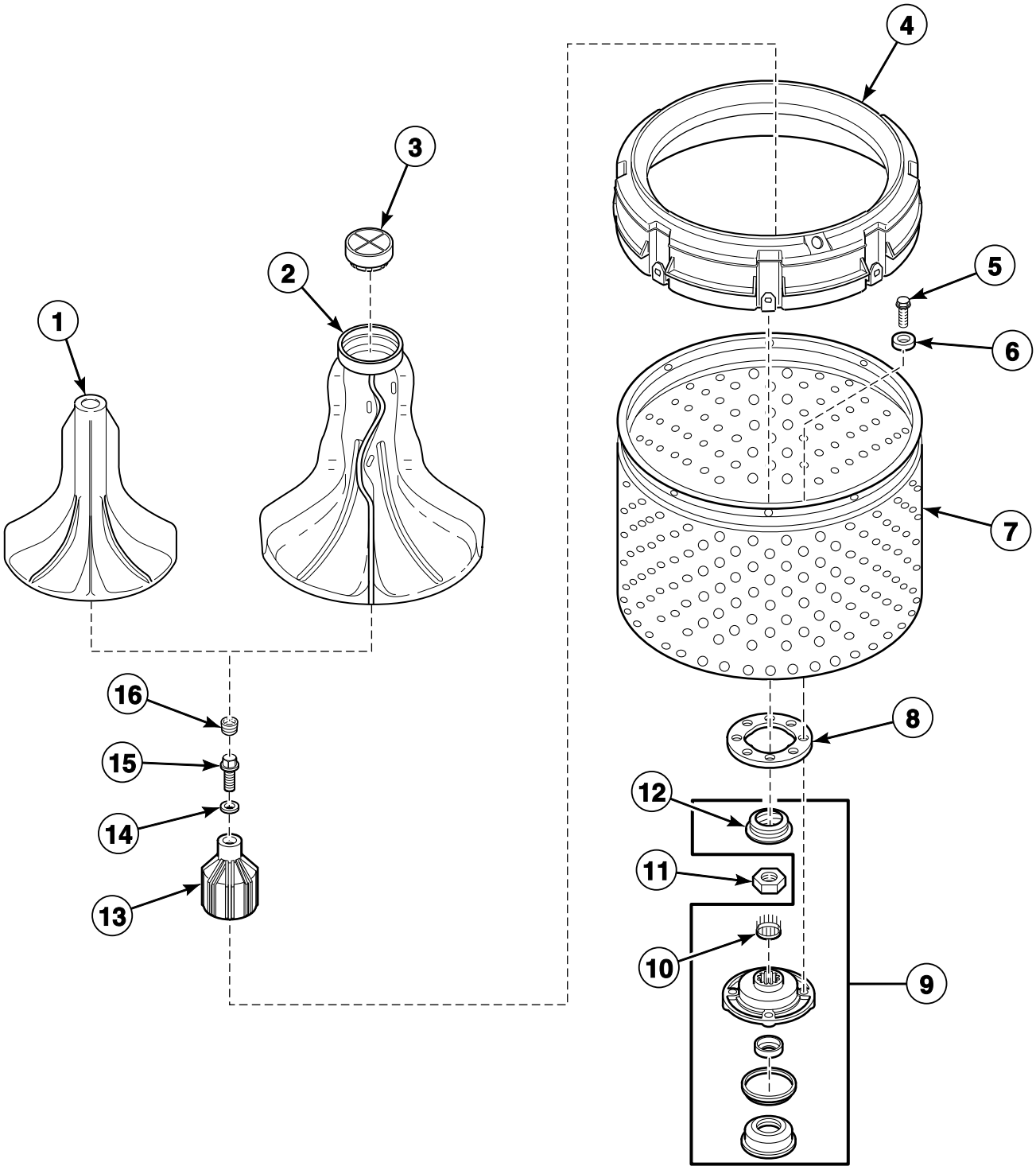

TLW999P_201142

© Copyright, Alliance Laundry Systems LLC – DO NOT COPY or TRANSMIT

Agitator, Drive Bell, Hub and Seal Kit and Washtub

REF	PART NO.	DESCRIPTION	COMMENTS
1	33514	Agitator	Models LWS01A*-1000, LWS01A*-1088, LWS01A*-3088 and LWS01A*-3300
2	33174	Agitator	Models LWS01M*-1088, LWS01M*-3088, LWS01M*-3300 and LWZ01M*-1102
3	36515	Agitator Cap	Use with item 2
4	39837	Balance Ring Assembly	White
5	27202	Screw	
6	28094	Washer	Use with porcelain washtub
7	39252P	Tub Assembly	Blue porcelain
8	39122	Washtub Gasket	
9	646P3	Hub and Seal Kit	Includes 38359 Tub Cover Gasket and item 13
10	29728	Spline Insert	
11	29220	Nut	
12	36425	Bell and Transmission Tube Seal	
13	39508P	Drive Bell and Seal Kit	Replaces 36443P Drive Bell and Seal Kit; Includes items 10, 12, 15 and 16
14	36472	O-Ring	Not needed if using new item 15
15	39432	Screw	
16	36511	Bell Plug	

*** Add Letter To Designate Color. L - Almond Q - Bisque W - White**

© Copyright, Alliance Laundry Systems LLC – DO NOT COPY or TRANSMIT

Agitator, Fabric Softener Dispenser, Drive Bell, Hub and Lip Seal Kit and Washtub (Drawing 1 of 2)

Models AWN552SN301AW01, AWN552SN301NW22, AWN552SN301NW29, AWNA62SN301AW01, AWZ17N*-1102, AWZ44N*-1102, AWZ45N*-1102, AWZ51N*-1102, AWZ52N*-1102, CWN311SP111CW01, CWN412SP111CW01, DWN412SP111CW01, FWN311SP301NW10, FWN311SP301NW22, LWD51N*-1100, LWD52N*-1100, LWH16N*-3322, LWH18N*-3322, LWK24N*-3050, LWK74N*-3050, LWN311SP101NW22, LWN311SP111NW22, LWN311SP111TW05, LWN311SP301NW22, LWN311SP331NW22, LWN311SP541NW23, LWN311SP541RW01, LWN311WP101NW22, LWN311WP111NW22, LWN311WP301NW22, LWN311WP331NW22, LWN311WP541NW23, LWN311WP541RW01, LWN312SP301AW01, LWN412SP111MW33 and TWN311SP301NW22

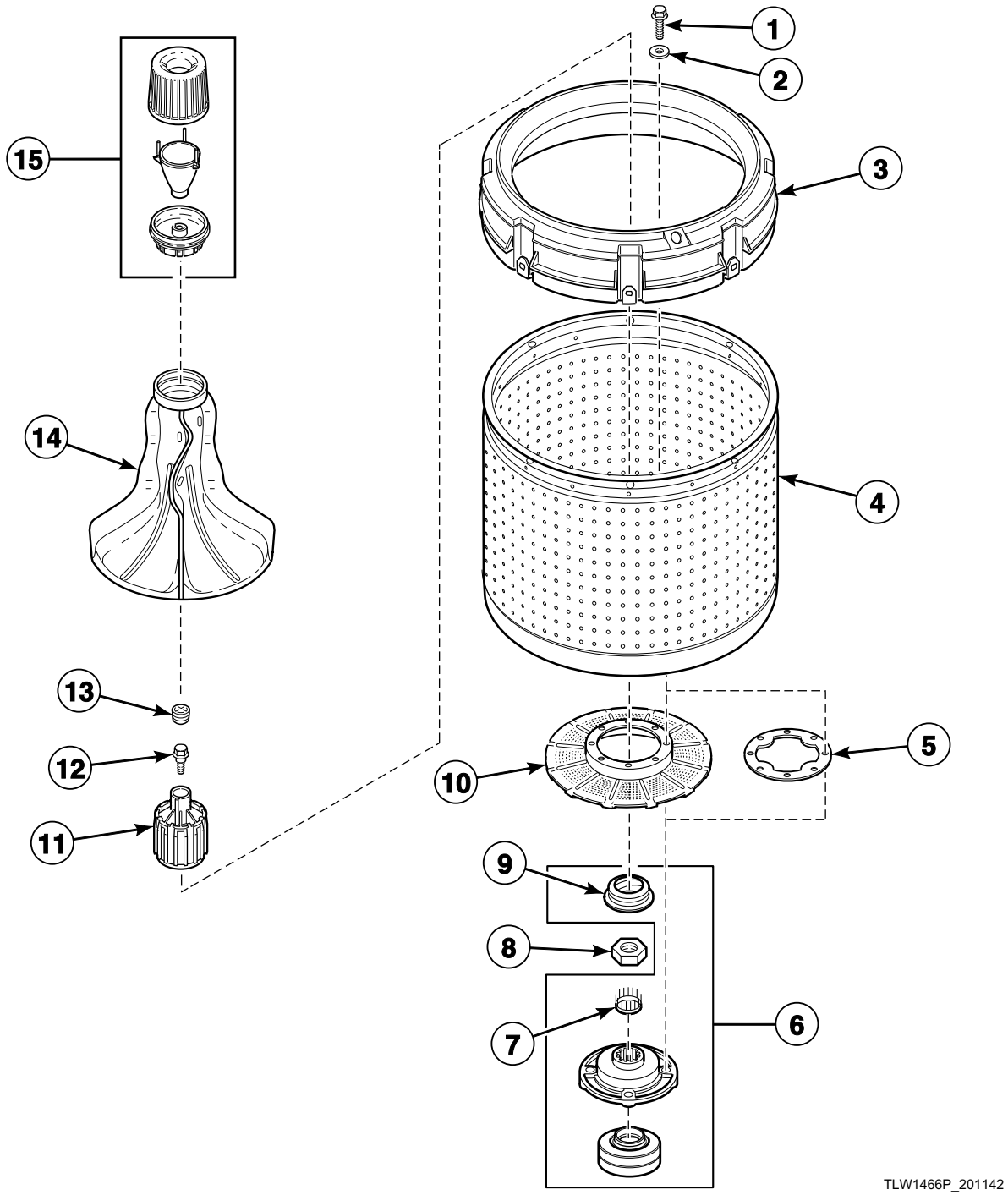

© Copyright, Alliance Laundry Systems LLC – DO NOT COPY or TRANSMIT

Agitator, Fabric Softener Dispenser, Drive Bell, Hub and Lip Seal Kit and Washtub (Drawing 1 of 2)

REF	PART NO.	DESCRIPTION	COMMENTS
1	27202	Screw	
2	28094	Washer	Rubber; Use with porcelain washtub
3	39837	Balance Ring Assembly	
4	39240P	Tub Assembly	White porcelain; Models LWH16N*-3322, LWN311WP101NW22, LWN311WP111NW22, LWN311WP301NW22, LWN311WP331NW22, LWN311WP541NW23 and LWN311WP541RW01
	719P3	Washtub Kit	Stainless steel; All other models
5	39122	Washtub Gasket	Models AWN552SN301AW01, AWN552SN301NW22, AWNA62SN301AW01, LWK24N*-3050 and LWK74N*-3050
6	766P3A	Hub and Lip Seal Kit	DO NOT use any sealant other than 200996P Sealant; Includes item 11 and installation tool
	200996P	Sealant	Use with hub and lip seal kit
7	29728	Spline Insert	
8	29220	Nut	
9	36425	Bell and Transmission Tube Seal	
10	39371	Lint Filter	All models through Serial Nos. beginning 1503 except AWN552SN301AW01, AWN552SN301NW22, AWN552SN301NW29, AWNA62SN301AW01, LWK24N*-3050 and LWK74N*-3050
11	39508P	Drive Bell and Seal Kit	Includes items 9, 12 and 13
12	39432	Screw	
13	36511	Bell Plug	
14	36507	Flex Vane Agitator	Flex vane; Models AWN552SN301AW01, AWN552SN301NW22, AWN552SN301NW29, AWNA62SN301AW01, AWZ17N*-1102, AWZ44N*-1102, AWZ45N*-1102, AWZ51N*-1102, AWZ52N*-1102, CWN311SP111CW01, CWN412SP111CW01, DWN412SP111CW01, LWD51N*-1100, LWD52N*-1100, LWH16N*-3322, LWH18N*-3322, LWK24N*-3050, LWK74N*-3050, LWN311SP541RW01, LWN311WP541RW01 and LWN312SP301AW01
	33174	Agitator	Curved vane; All other models
15	204214	Fabric Softener Dispenser Assembly	

*** Add Letter To Designate Color. L - Almond Q - Bisque W - White**

© Copyright, Alliance Laundry Systems LLC – DO NOT COPY or TRANSMIT

Agitator, Fabric Softener Dispenser, Drive Bell, Hub and Lip Seal Kit and Washtub (Drawing 2 of 2)

Models LWS11N*-3062, LWS16N*-1000, LWS16N*-1122, LWS16N*-3022, LWS16N*-3322, LWS16N*-5423, LWS16N*K, LWS17N*-1000, LWS17N*-1122, LWS17N*-1127, LWS17N*-3000, LWS17N*-3022, LWS17N*-3028, LWS17N*-3300, LWS17N*-3322, LWS17N*-5423, LWS17N*B3020, LWS17N*B3069, LWS17N*K, LWS21N*-3062, LWS42N*-3050, LWS45N*-1127, LWS45N*-1130, LWS52N*-1127, LWT42N*-1100, LWT52N*-1100, LWZ16N*-1000, LWZ17N*-3022, LWZ17N*B3020, LWZ17N*B3069, LWZ20N*-3300, LWZ22N*-1102, LWZ42N*-1102, LWZ52N*-1102, LWZ77N*-1102, MWN311SP111TW06, YWN321SP541RW01, ZWN311SP111CW01, ZWN402PP111CW01, ZWN412SP111CW01 and ZWN432SP111CW01

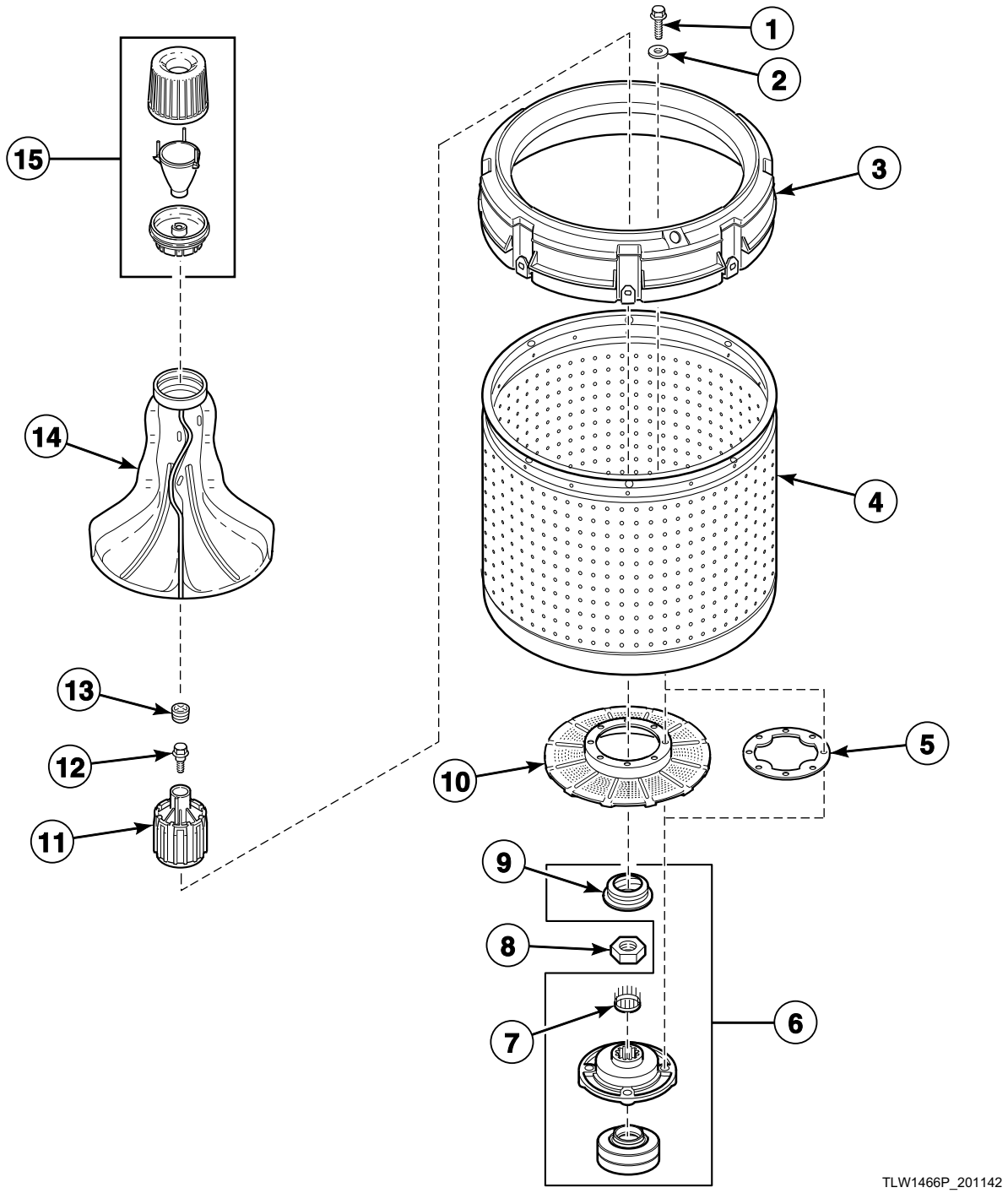

© Copyright, Alliance Laundry Systems LLC – DO NOT COPY or TRANSMIT

Agitator, Fabric Softener Dispenser, Drive Bell, Hub and Lip Seal Kit and Washtub (Drawing 2 of 2)

REF	PART NO.	DESCRIPTION	COMMENTS
1	27202	Screw	
2	28094	Washer	Rubber; Use with porcelain washtub
3	39836	Balance Ring Assembly	Models LWS17N*B3069 and LWZ17N*B3069
	39837	Balance Ring Assembly	All other models
4	39240P	Tub Assembly	White porcelain; Models LWS16N*-1000, LWS16N*-1122, LWS16N*-3022, LWS16N*-3322, LWS16N*-5423, LWS16N*K, LWZ16N*-1000 and LWZ22N*-1102
	39250P	Tub Kit	Blue porcelain; Models LWS11N*-3062 and ZWN402PP111CW01
	719P3	Washtub Kit	Stainless steel; All other models
5	39122	Washtub Gasket	Models LWS11N*-3062 and LWS21N*-3062
6	766P3A	Hub and Lip Seal Kit	DO NOT use any sealant other than 200996P Sealant; Includes item 11 and installation tool
	200996P	Sealant	Use with hub and lip seal kit
7	29728	Spline Insert	
8	29220	Nut	
9	36425	Bell and Transmission Tube Seal	
10	39371	Lint Filter	All models through Serial Nos. beginning 1503 except LWS11N*-3062 and LWS21N*-3062
11	39508P	Drive Bell and Seal Kit	Includes items 9, 12 and 13
12	39432	Screw	
13	36511	Bell Plug	
14	36507	Flex Vane Agitator	Flex vane; Models LWS11N*-3062, LWS21N*-3062, LWS52N*-1127, LWT42N*-1100, LWT52N*-1100, LWZ22N*-1102, LWZ42N*-1102, LWZ52N*-1102, LWZ77N*-1102, YWN321SP541RW01, ZWN311SP111CW01, ZWN402PP111CW01, ZWN412SP111CW01 and ZWN432SP111CW01
	33174	Agitator	Curved vane; All other models
15	204214	Fabric Softener Dispenser Assembly	

*** Add Letter To Designate Color. L - Almond Q - Bisque W - White**

© Copyright, Alliance Laundry Systems LLC – DO NOT COPY or TRANSMIT

Agitator, Fabric Softener Dispenser, Drive Bell, Hub and Seal Kit and Washtub

Models AWZ53N*-1102, LWB19A*-1109, LWB19B*-1109, LWB19M*-1109, LWD52M*-1100, LWG74A*-3050, LWH18A*-3322, LWK23A*-3050, LWK24A*-3050, LWK73A*-3050, LWK74A*-3050, LWS01M*-1000, LWS11A*-3062, LWS16A*-1000, LWS16A*-3000, LWS16A*-3022, LWS16A*-3300, LWS16A*-3322, LWS16A*K, LWS16B*K, LWS16M*-1000, LWS16M*-3000, LWS16M*-3022, LWS16M*-3300, LWS16M*-3322, LWS16M*K, LWS17A*-1000, LWS17A*-3000, LWS17A*-3022, LWS17A*-3028, LWS17A*-3050, LWS17A*-3300, LWS17A*-3322, LWS17A*B3020, LWS17A*B3069, LWS17A*K, LWS17B*K, LWS17M*-1000, LWS17M*-1127, LWS17M*-3000, LWS17M*-3022, LWS17M*-3050, LWS17M*-3300, LWS17M*-3322, LWS17M*B3020, LWS17M*B3069, LWS17M*K, LWS21A*-3062, LWS42M*-3050, LWS45M*-1127, LWY17A*-1109, LWY17B*-1109, LWY17M*-1109, LWY45A*-1109, LWY45B*-1109, LWY45M*-1109, LWZ16A*-1000, LWZ16M*-1000, LWZ17A*-3000, LWZ17A*B3020, LWZ17A*B3069, LWZ17M*-3000, LWZ17M*B3020, LWZ17M*B3069, LWZ20M*-3300, LWZ22M*-1102, LWZ42M*-1102, LWZ52M*-1102 and LWZ77M*-1102

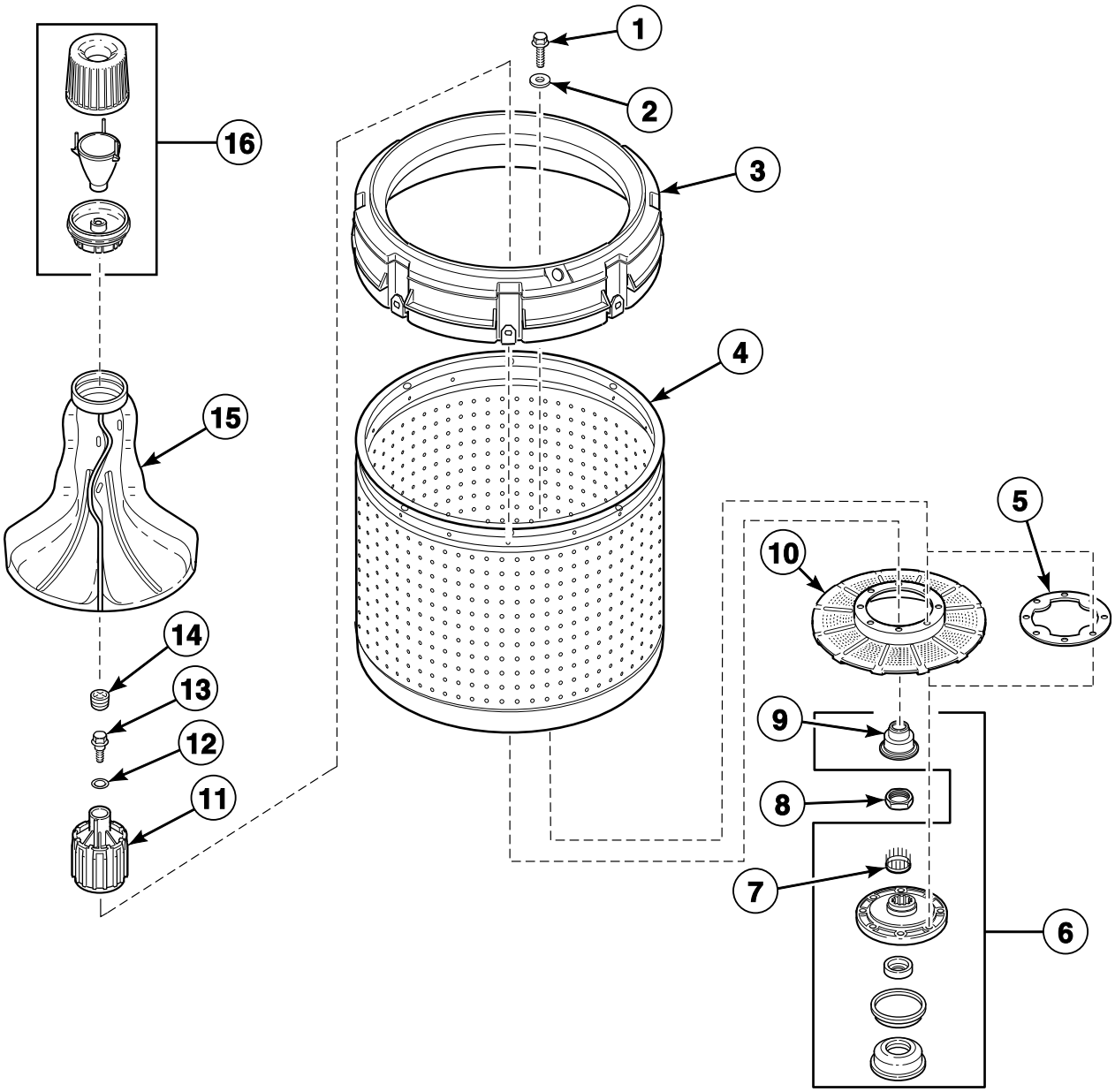

TLW1669P_201142

© Copyright, Alliance Laundry Systems LLC – DO NOT COPY or TRANSMIT

Agitator, Fabric Softener Dispenser, Drive Bell, Hub and Seal Kit and Washtub

REF	PART NO.	DESCRIPTION	COMMENTS
1	27202	Screw	
2	28094	Washer	Use with porcelain washtub
3	39836	Balance Ring Assembly	Models LWS17M*B3069 and LWZ17M*B3069
	39837	Balance Ring Assembly	All other models
4	39240P	Tub Assembly	White porcelain; Models LWB19A*-1109, LWB19B*-1109, LWS16A*-1000, LWS16A*-3000, LWS16A*-3022, LWS16A*-3300, LWS16A*-3322, LWS16A*K, LWS16B*K, LWS16M*-1000, LWS16M*-3000, LWS16M*-3022, LWS16M*-3300, LWS16M*-3322, LWS16M*K, LWZ16M*-1000 and LWZ22M*-1102
	39250P	Tub Kit	Blue porcelain; Model LWS11A*-3062
	719P3	Washtub Kit	Stainless steel; All other models
5	39122	Washtub Gasket	Models LWK23A*-3050, LWK24A*-3050, LWK73A*-3050, LWK74A*-3050, LWS11A*-3062 and LWS21A*-3062
6	646P3	Hub and Seal Kit	Includes 38359 Tub Cover Gasket and item 11
7	29728	Spline Insert	
8	29220	Nut	
9	36425	Bell and Transmission Tube Seal	
10	39371	Lint Filter	All models except LWK23A*-3050, LWK24A*-3050, LWK73A*-3050, LWK74A*-3050, LWS11A*-3062 and LWS21A*-3062
11	39508P	Drive Bell and Seal Kit	Replaces 36443P Drive Bell and Seal Kit; Includes items 7, 9, 13 and 14
12	36472	O-Ring	Not needed if using new item 13
13	39432	Screw	
14	36511	Bell Plug	
15	36507	Flex Vane Agitator	Flex vane; Models LWD52M*-1100, LWG74A*-3050, LWH18A*-3322, LWK23A*-3050, LWK24A*-3050, LWK73A*-3050, LWK74A*-3050, LWS11A*-3062, LWS21A*-3062, LWZ22M*-1102, LWZ42M*-1102, LWZ52M*-1102 and LWZ77M*-1102
	33174	Agitator	Curved vane; All other models
16	204214	Fabric Softener Dispenser Assembly	

*** Add Letter To Designate Color. L - Almond Q - Bisque W - White**

© Copyright, Alliance Laundry Systems LLC – DO NOT COPY or TRANSMIT

Outer Tub, Cover, Bearing and Seal Housing, Pressure Hose and Counterweight (Drawing 1 of 2)

Models with the Letter “N” in the 3rd or 6th Character of the Model Number except AWNA62SN301AW01

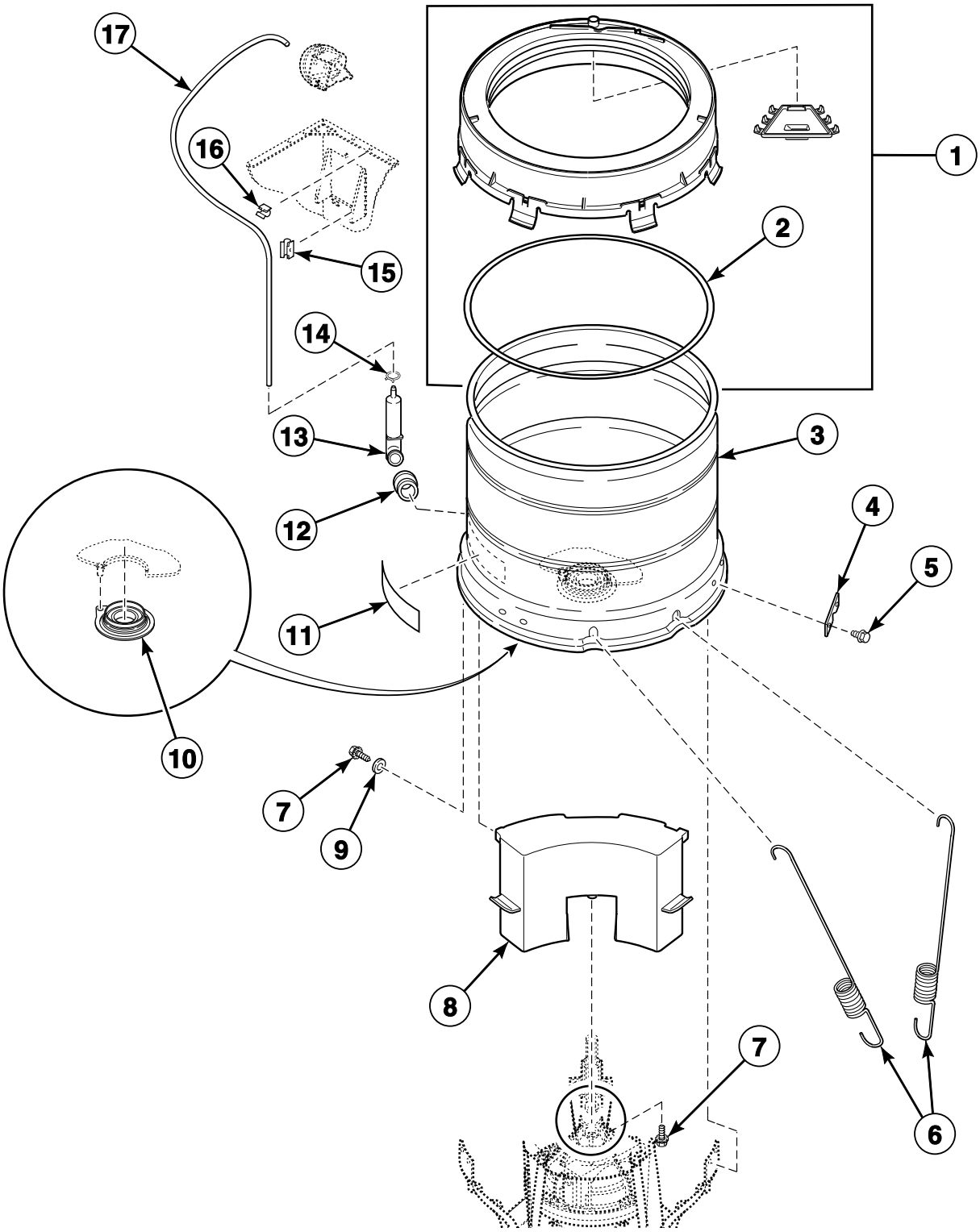

TLW1464P_201142

© Copyright, Alliance Laundry Systems LLC – DO NOT COPY or TRANSMIT

Outer Tub, Cover, Bearing and Seal Housing, Pressure Hose and Counterweight (Drawing 1 of 2)

REF	PART NO.	DESCRIPTION	COMMENTS
1	38573	Tub Cover and Gasket Assembly	Models LWS17N*B3069 and LWZ17N*B3069; Includes item 2
	39169	Tub Cover Assembly	Includes item 2; All models except LWS17N*B3069 and LWZ17N*B3069; Models AWN552SN301NW29, FWN311SP301NW10, FWN311SP301NW22, LWH16N*-3322, LWH18N*-3322, LWN311SP101NW22, LWN311SP111NW22, LWN311SP301NW22, LWN311SP541NW23, LWN311WP101NW22, LWN311WP111NW22, LWN311WP301NW22, LWN311WP541NW23, LWN412SP111MW33, LWS21N*-3062, LWS42N*-3050 and LWZ17N*-3022 through Serial No. 1810000001
	202888	Tub Cover Assembly	Models AWN552SN301NW29, FWN311SP301NW10, FWN311SP301NW22, LWH16N*-3322, LWH18N*-3322, LWN311SP101NW22, LWN311SP111NW22, LWN311SP301NW22, LWN311SP541NW23, LWN311WP101NW22, LWN311WP111NW22, LWN311WP301NW22, LWN311WP541NW23, LWN412SP111MW33, LWS21N*-3062, LWS42N*-3050 and LWZ17N*-3022; Starting Serial No. 1810000001
2	38359	Tub Cover Gasket	
3	203604P	Outer Tub Assembly	Models LWS01N*-3088, LWS01N*-3300 and LWZ01N*-1102
	203603P	Outer Tub Assembly	All other models
	N/A	Outer Tub Flange Kit	Use to replace outer tub flange due to flange damage or corrosion
4	27926	Leg Plate	
5	35369	Screw	
6	37576	Leg Spring	Models LWS01N*-3088, LWS01N*-3300 and LWZ01N*-1102
	201521	Leg Spring	Marked with green paint; Use to replace two rear springs (closest to counterweight); Models LWN311SP101NW22, LWN311WP101NW22 and LWN312SP301AW01; Models AWN552SN301AW01, AWN552SN301NW22, AWN552SN301NW29, LWK74N*-3050, LWS16N*-1000, LWS17N*-1000, LWS42N*-3050, LWZ16N*-1000 and LWZ77N*-1102 starting Serial No. 0511019322
	37575	Leg Spring	Marked with blue paint
7	39566	Screw	
8	912P3	Counterweight Assembly	Models LWK74N*-3050, LWS16N*-1000, LWS17N*-1000, LWS42N*-3050, LWZ16N*-1000 and LWZ77N*-1102 through Serial No. 0511019321
	38769	Counterweight Assembly	
9	39249	Washer	
10	766P3A	Hub and Lip Seal Kit	Do NOT use any sealant other than 200996P Sealant
	200996P	Sealant	Use with hub and lip seal kit
11	D502506	Pinched Fingers Label	Models LWS17N*B3020, LWS17N*B3069, LWZ17N*B3020 and LWZ17N*B3069
	202256	Warning Label	Model LWS17N*-3028
	F8615701	Pinch Warning Label	Model LWN412SP111MW33
	D500049	Warning Label	All other models
12	29175	Grommet	
13	30907	Pressure Bulb	
14	39282	Hose Clamp	
15	36985	Hose Clip	
16	21036	Cable Clip	
17	202700	Tubing	

*** Add Letter To Designate Color. L - Almond Q - Bisque W - White**

N/A = Part no longer available

© Copyright, Alliance Laundry Systems LLC – DO NOT COPY or TRANSMIT

Outer Tub, Cover, Bearing and Seal Housing, Pressure Hose and Counterweight (Drawing 2 of 2)

Model AWNA62SN301AW01

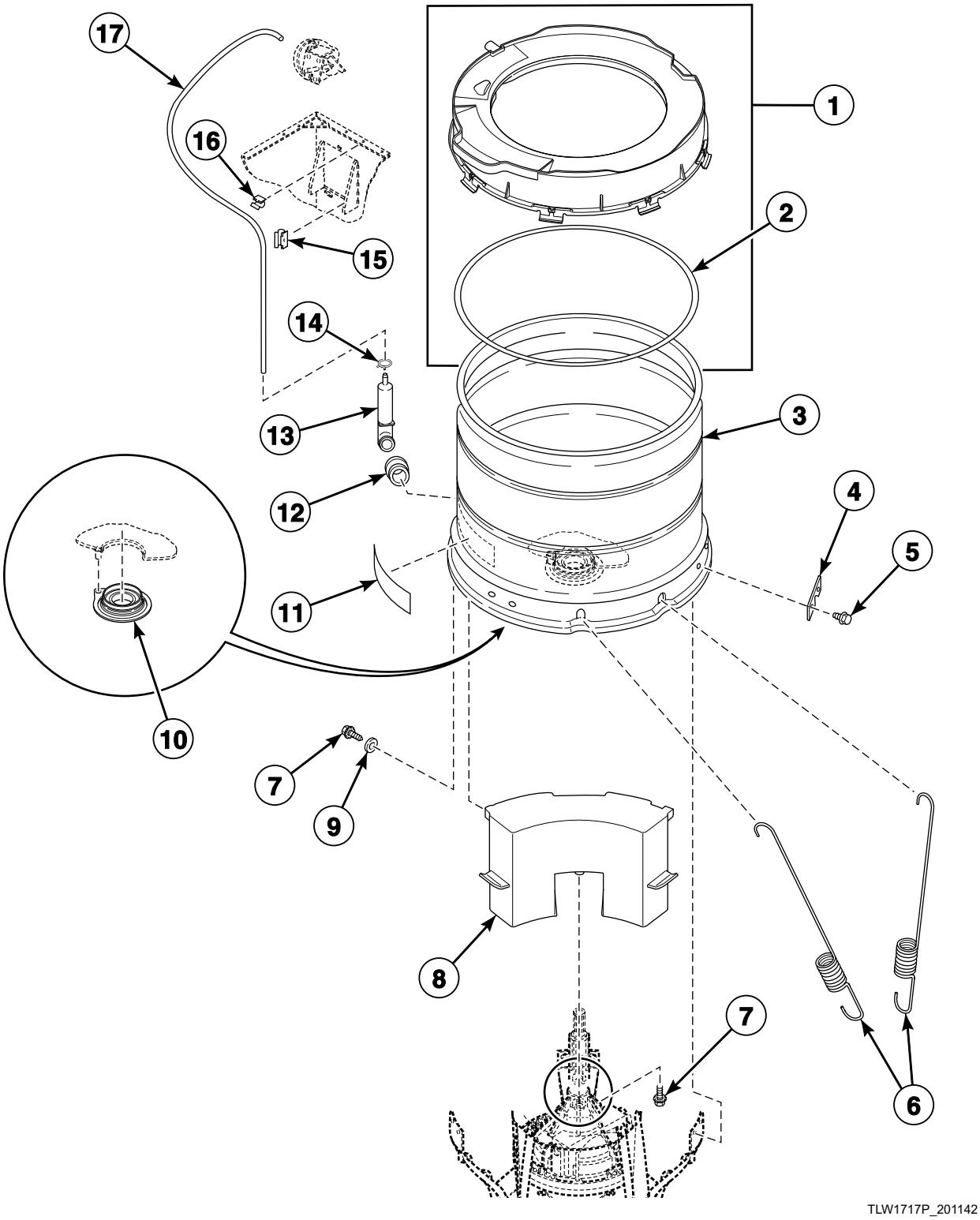

© Copyright, Alliance Laundry Systems LLC – DO NOT COPY or TRANSMIT

Outer Tub, Cover, Bearing and Seal Housing, Pressure Hose and Counterweight (Drawing 2 of 2)

REF	PART NO.	DESCRIPTION	COMMENTS
1	203154	Tub Cover Assembly	Includes item 2; Includes check valve; Through Serial Nos. beginning 1412
	202461	Tub Cover Assembly	Includes item 2; Starting Serial Nos. beginning 1412
2	38359	Tub Cover Gasket	
3	203603P	Outer Tub Assembly	
4	27926	Leg Plate	
5	35369	Screw	
6	201521	Leg Spring	Marked with green paint; Use to replace two rear springs (closest to counterweight)
	37575	Leg Spring	Marked with blue paint
7	39566	Screw	
8	38769	Counterweight Assembly	
9	39249	Washer	
10	766P3A	Hub and Lip Seal Kit	Do NOT use any sealant other than 200996P Sealant
	200996P	Sealant	Use with hub and lip seal kit
11	D500049	Warning Label	
12	29175	Grommet	
13	30907	Pressure Bulb	
14	39282	Hose Clamp	
15	36985	Hose Clip	
16	21036	Cable Clip	
17	202700	Tubing	

© Copyright, Alliance Laundry Systems LLC – DO NOT COPY or TRANSMIT

Outer Tub, Cover, Bearing Housing, Pressure Hose and Counterweight

All Models Except Models with the Letter “N” in the 3rd or 6th Character of the Model Number

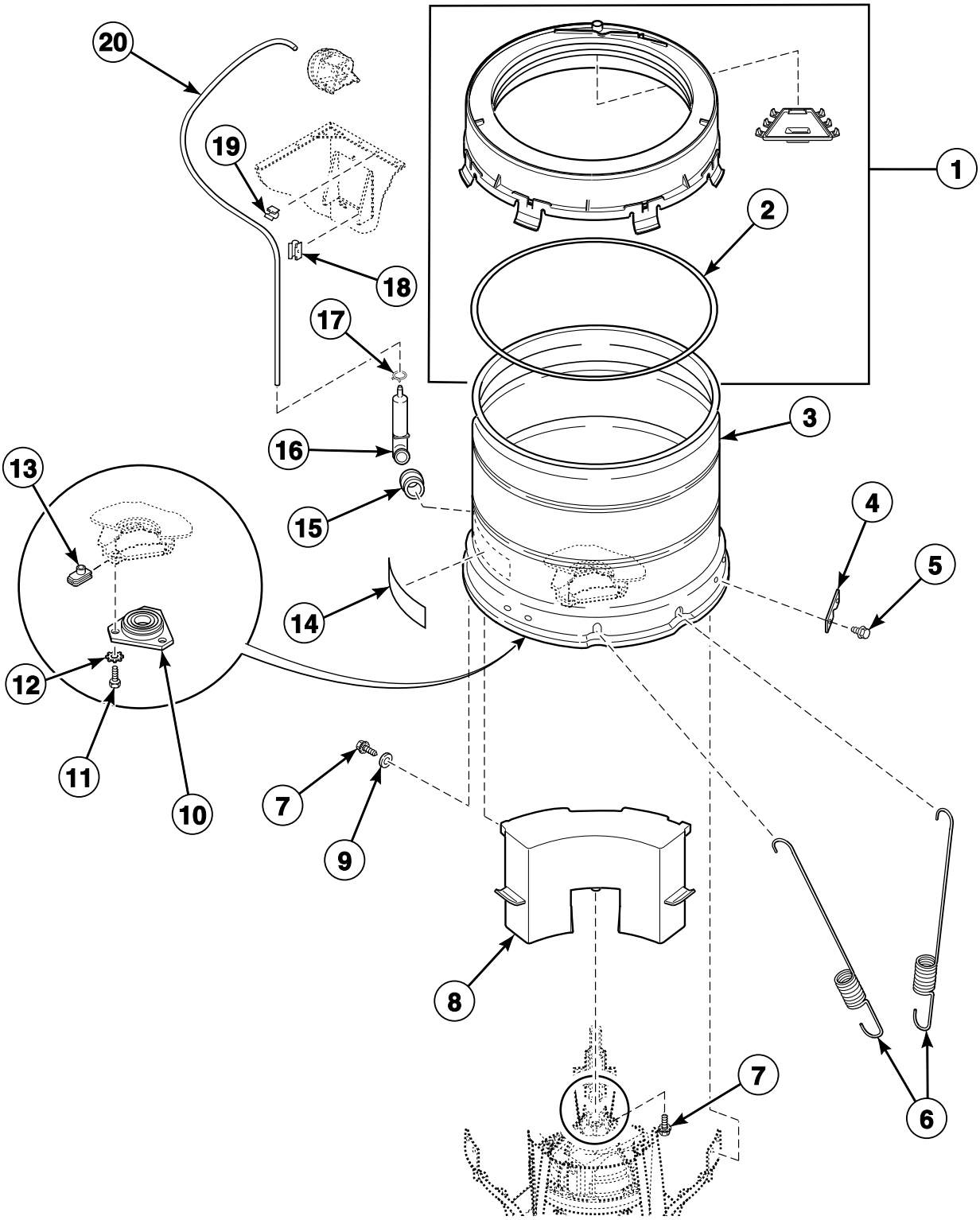

TLW1624P_201142

© Copyright, Alliance Laundry Systems LLC – DO NOT COPY or TRANSMIT

Outer Tub, Cover, Bearing Housing, Pressure Hose and Counterweight

REF	PART NO.	DESCRIPTION	COMMENTS
1	38573	Tub Cover and Gasket Assembly	Models LWS17A*B3069, LWS17M*B3069, LWZ17A*B3069 and LWZ17M*B3069; Includes item 2
	39169	Tub Cover Assembly	All other models; Includes item 2
2	38359	Tub Cover Gasket	
3	37981P	Outer Tub Kit	Models LWS01A*-3088, LWS01M*-3088, LWS01M*-3300 and LWZ01M*-1102
	37813P	Outer Tub	All other models
	N/A	Outer Tub Flange Kit	Use to replace outer tub flange due to flange damage or corrosion
4	27926	Leg Plate	
5	35369	Screw	
6	37576	Leg Spring	Models LWS01A*-3088, LWS01M*-3088, LWS01M*-3300 and LWZ01M*-1102
	37575	Leg Spring	All other models
7	39566	Screw	
8	912P3	Counterweight Assembly	Models LWK74A*-3050, LWS16A*-1000, LWS16M*-1000, LWS17A*-1000, LWS17M*-1000, LWS42M*-3050, LWZ16A*-1000, LWZ16M*-1000 and LWZ77M*-1102
	38769	Counterweight Assembly	All other models
9	39249	Washer	
10	27182	Bearing Housing Assembly	
11	M400057	Screw	
12	202010	Washer	
13	27222	Nut	
14	D502506	Pinched Fingers Label	Models LWS17A*B3020, LWS17A*B3069, LWS17M*B3020, LWS17M*B3069, LWZ17A*B3020, LWZ17A*B3069, LWZ17M*B3020 and LWZ17M*B3069
	D500049	Warning Label	All other models
15	29175	Grommet	
16	30907	Pressure Bulb	
17	39282	Hose Clamp	
18	36985	Hose Clip	
19	21036	Cable Clip	
20	202700	Tubing	

*** Add Letter To Designate Color. L - Almond Q - Bisque W - White**

N/A = Part no longer available

© Copyright, Alliance Laundry Systems LLC – DO NOT COPY or TRANSMIT

Electric Drain Pump with Rubber Drain Hose and Siphon Break Kit

Models LWS11A*-3062 Through Serial No. 0007000815 and LWS21A*-3062 Through Serial No. 0004002933

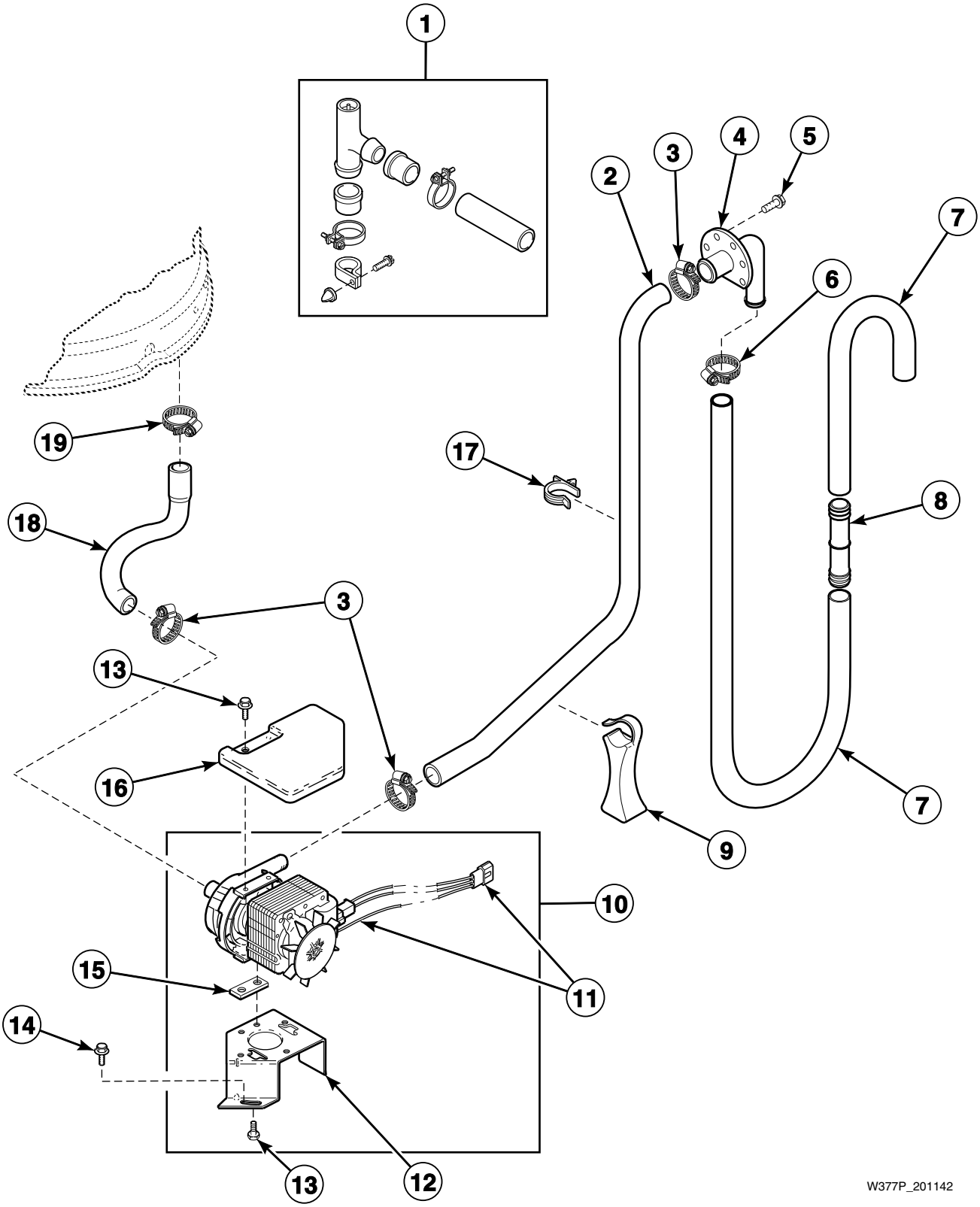

© Copyright, Alliance Laundry Systems LLC – DO NOT COPY or TRANSMIT

Electric Drain Pump with Rubber Drain Hose and Siphon Break Kit

REF	PART NO.	DESCRIPTION	COMMENTS
	451P3	Drain Extension Kit	
1	562P3	Siphon Break Kit	Siphon break kit MUST be installed in drain hose if drain receptacle is lower than cabinet top of washer
2	N/A	Pump-To-Drain Elbow Hose	
3	20391	Hose Clamp	
4	35766	Drain Hose Elbow	
5	52909	Screw	
6	20211	Hose Clamp	
7	28293	Drain Hose	
8	25863	Hose Coupler	If drain hose must be shortened, cut hose between molded end and molded elbow; Use 1 hose coupler to splice hose
9	38732	Hose Stand	
10	39255P	Drain Pump	
11	38068	Pump Wire Harness Assembly	
12	38789	Pump Bracket	
13	38096	Screw	Metric
14	D503661	Screw	
15	38095	Pump Isolator	
16	38768	Pump Shield	
17	39177	Hose Retainer Clip	
18	38759	Tub-to-Pump Hose	
19	36802	Hose Clamp	

*** Add Letter To Designate Color. L - Almond Q - Bisque W - White**
N/A = Part no longer available

© Copyright, Alliance Laundry Systems LLC – DO NOT COPY or TRANSMIT

Electric Drain Pump with Plastic Drain Hose and Siphon Break Kit

Models AWN552SN301AW01, AWN552SN301NW22, AWN552SN301NW29, AWNA62SN301AW01, LWG74A*-3050, LWK23A*-3050, LWK24A*-3050, LWK24N*-3050, LWK73A*-3050, LWK74A*-3050 and LWK74N*-3050

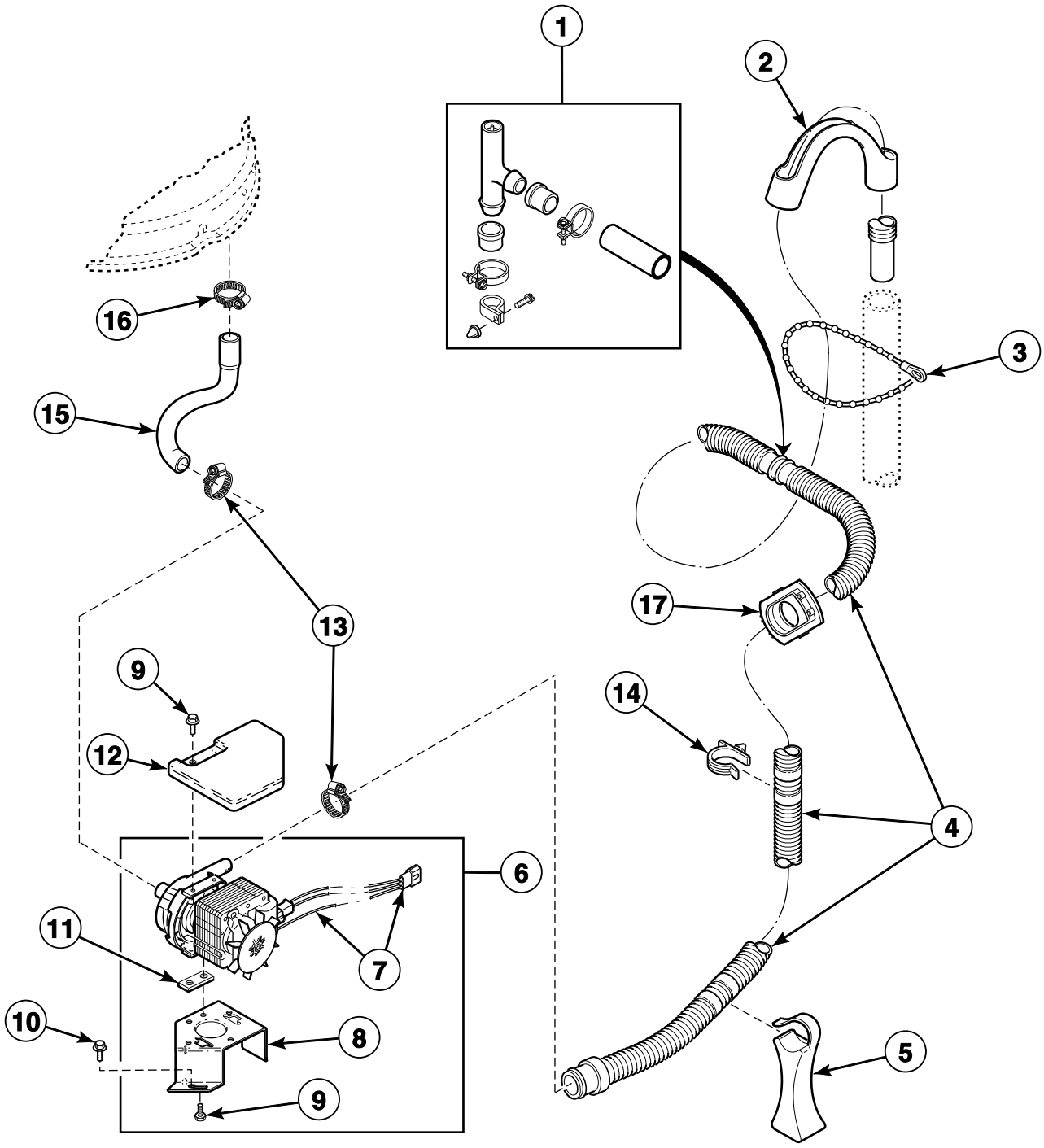

W378P_201142

© Copyright, Alliance Laundry Systems LLC – DO NOT COPY or TRANSMIT

Electric Drain Pump with Plastic Drain Hose and Siphon Break Kit

REF	PART NO.	DESCRIPTION	COMMENTS
1	562P3	Siphon Break Kit	Siphon break kit MUST be installed in drain hose if drain receptacle is lower than cabinet top of washer
2	33615	Drain Hose Sleeve	
3	33489	Standpipe Strap	
4	39864	Drain Hose	
5	38732	Hose Stand	
6	39255P	Drain Pump	
7	38068	Pump Wire Harness Assembly	Models LWG74A*-3050, LWK23A*-3050, LWK24A*-3050, LWK24N*-3050, LWK73A*-3050, LWK74A*-3050 and LWK74N*-3050
8	38789	Pump Bracket	
9	38096	Screw	Metric
10	D503661	Screw	
11	38095	Pump Isolator	
12	38768	Pump Shield	
13	20391	Hose Clamp	
14	36014	Retainer Clip	
15	38759	Tub-to-Pump Hose	
16	F200204	Hose Clamp	
17	32219	Strain Relief	

© Copyright, Alliance Laundry Systems LLC – DO NOT COPY or TRANSMIT

Plastic Drain Hose and Siphon Break Kit

Models LWS11A*-3062 Starting Serial No. 0007000816 and LWS21A*-3062 Starting Serial No. 0004002934
and All Other Models Except AWN552SN301AW01, AWN552SN301NW22, AWN552SN301NW29, AWNA62SN301AW01,
LWG74A*-3050, LWK23A*-3050, LWK24A*-3050, LWK24N*-3050, LWK73A*-3050, LWK74A*-3050 and LWK74N*-3050

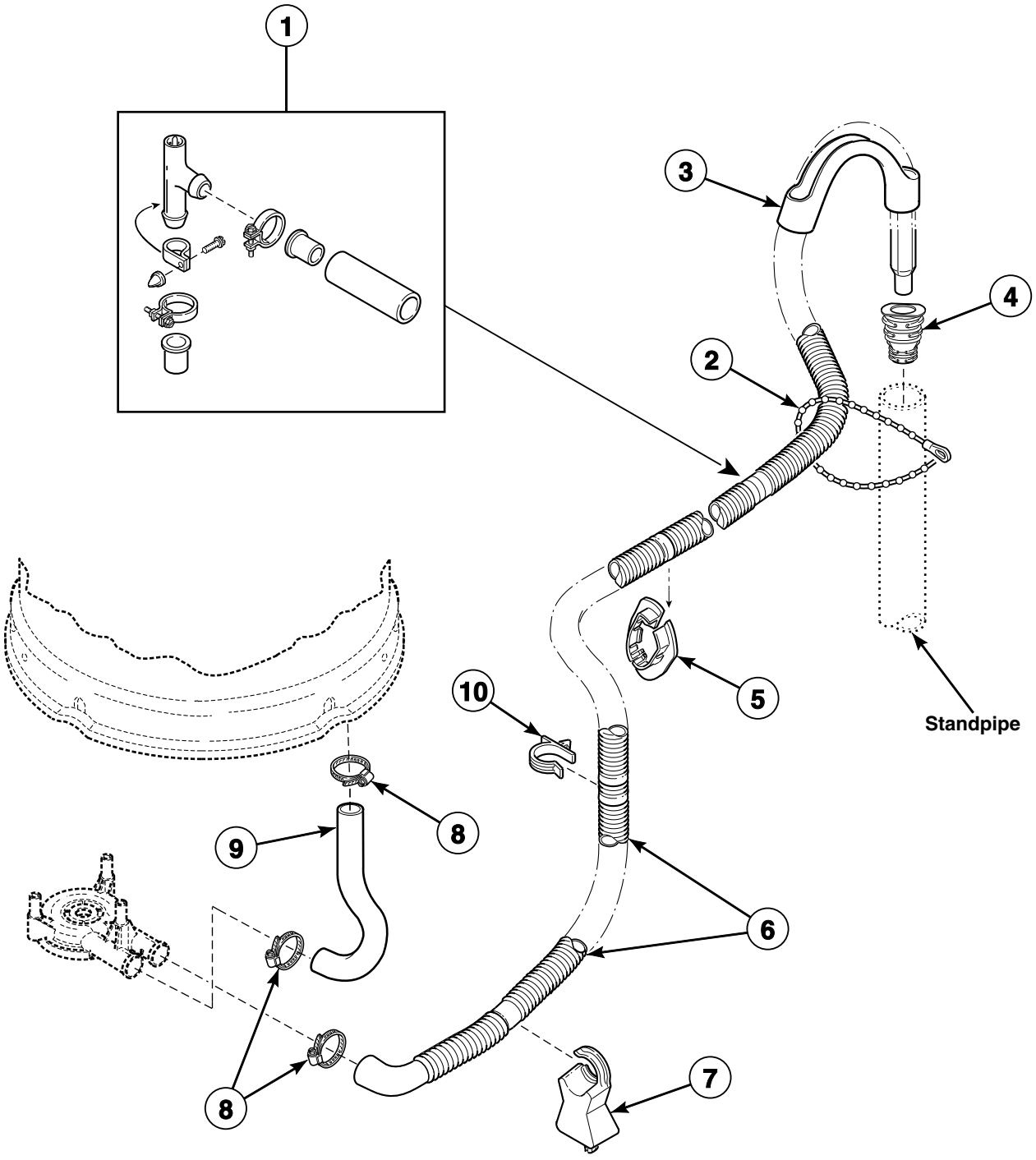

W329P_201142

© Copyright, Alliance Laundry Systems LLC – DO NOT COPY or TRANSMIT

Plastic Drain Hose and Siphon Break Kit

REF	PART NO.	DESCRIPTION	COMMENTS
1	562P3	Siphon Break Kit	Siphon break kit MUST be installed in drain hose if drain receptacle is lower than cabinet top of washer
2	33489	Standpipe Strap	
3	33615	Drain Hose Sleeve	
4	36878	Standpipe Adapter	Models AWZ17N*-1102, AWZ44N*-1102, AWZ45N*-1102, AWZ51N*-1102, AWZ52N*-1102, AWZ53N*-1102, CWN311SP111CW01, CWN412SP111CW01, DWN412SP111CW01, LWD51N*-1100, LWD52M*-1100, LWD52N*-1100, LWN311SP111NW22, LWN311SP111TW05, LWN311WP111NW22, LWN412SP111MW33, LWS16N*-1122, LWS17N*-1122, LWT42N*-1100, LWT52N*-1100, LWZ22M*-1102, LWZ22N*-1102, LWZ42M*-1102, LWZ42N*-1102, LWZ52M*-1102, LWZ52N*-1102, LWZ77M*-1102, LWZ77N*-1102, MWN311SP111TW06, TWN311SP301NW22, ZWN311SP111CW01, ZWN402PP111CW01, ZWN412SP111CW01 and ZWN432SP111CW01
5	32219	Strain Relief	
6	39893	Drain Hose	Models AWZ17N*-1102, AWZ44N*-1102, AWZ45N*-1102, AWZ51N*-1102, AWZ52N*-1102, CWN311SP111CW01, CWN412SP111CW01, DWN412SP111CW01, LWB19A*-1109, LWB19B*-1109, LWB19M*-1109, LWD51N*-1100, LWD52M*-1100, LWD52N*-1100, LWH16N*-3322, LWH18A*-3322, LWH18N*-3322, LWN311PP111NW22, LWN311SP111NW22, LWN311SP111TW05, LWN311SP331NW22, LWN311SP541NW23, LWN311SP541RW01, LWN311WP111NW22, LWN311WP331NW22, LWN311WP541NW23, LWN311WP541RW01, LWN412SP111MW33, LWS01A*-3300, LWS01M*-3300, LWS01N*-3300, LWS02N*-1122, LWS16A*-3300, LWS16A*-3322, LWS16A*K, LWS16B*K, LWS16M*-3300, LWS16M*-3322, LWS16M*K, LWS16N*-1122, LWS16N*-3322, LWS16N*-5423, LWS16N*K, LWS17A*-3300, LWS17A*-3322, LWS17A*K, LWS17B*K, LWS17M*-1127, LWS17M*-3300, LWS17M*-3322, LWS17M*K, LWS17N*-1122, LWS17N*-1127, LWS17N*-3300, LWS17N*-3322, LWS17N*-5423, LWS17N*K, LWS45M*-1127, LWS45N*-1127, LWS45N*-1130, LWS52N*-1127, LWT42N*-1100, LWT52N*-1100, LWY17A*-1109, LWY17B*-1109, LWY17M*-1109, LWY45A*-1109, LWY45B*-1109, LWY45M*-1109, LWZ01M*-1102, LWZ01N*-1102, LWZ02N*-1102, LWZ20M*-3300, LWZ20N*-3300, LWZ22M*-1102, LWZ22N*-1102, LWZ42M*-1102, LWZ42N*-1102, LWZ52M*-1102, LWZ52N*-1102, LWZ77M*-1102, LWZ77N*-1102, MWN311SP111TW06, YWN311PP111CW01, YWN321SP541RW01, ZWN311SP111CW01, ZWN402PP111CW01, ZWN412SP111CW01 and ZWN432SP111CW01
	39894	Drain Hose	All other models
7	38732	Hose Stand	
8	F200204	Hose Clamp	
9	38351	Tub-to-Pump Hose	
10	36014	Retainer Clip	

*** Add Letter To Designate Color. L - Almond Q - Bisque W - White**

© Copyright, Alliance Laundry Systems LLC – DO NOT COPY or TRANSMIT

Weldment and Bearing Assembly, Brake and Pulley

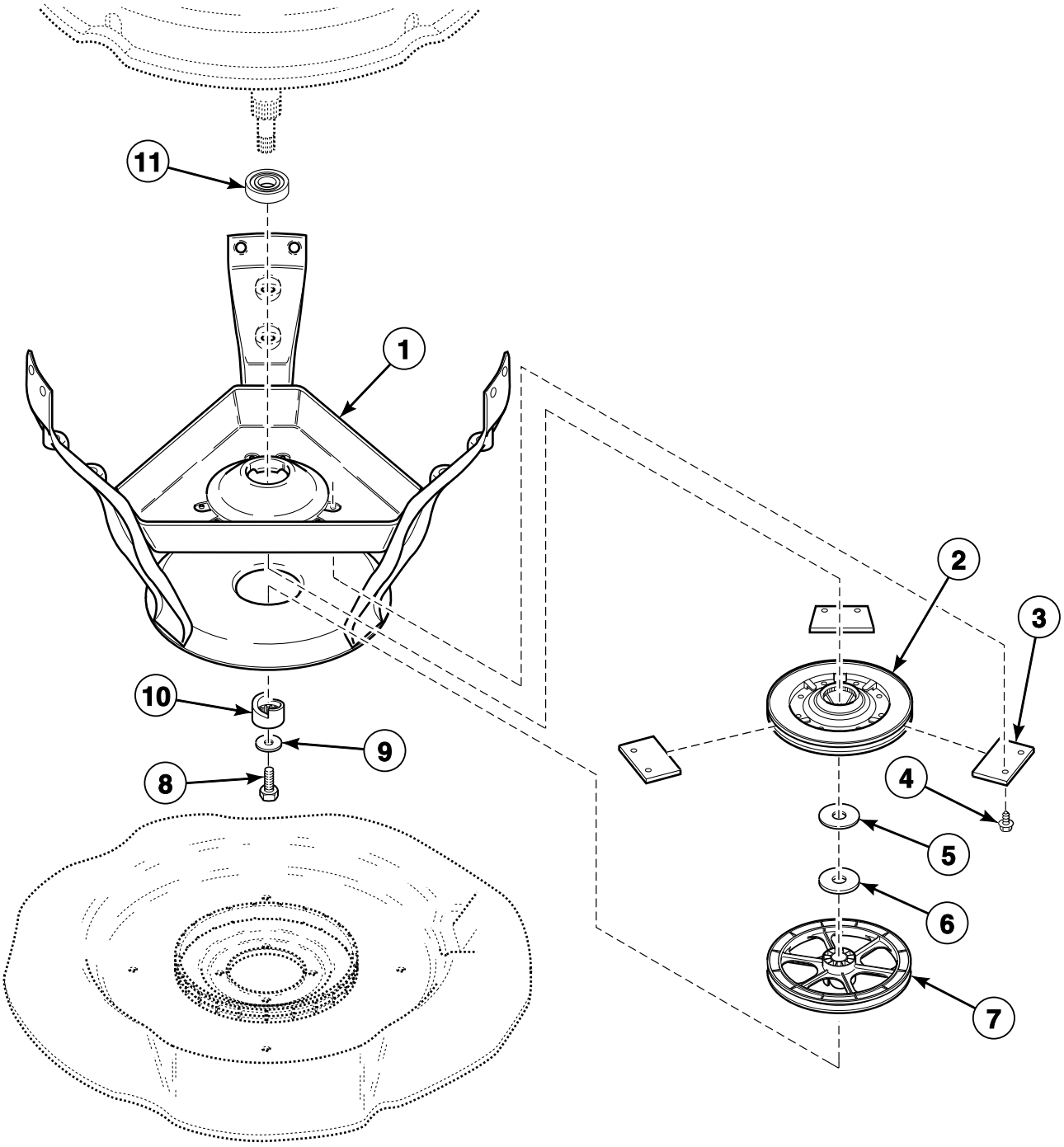

W333P_201142

© Copyright, Alliance Laundry Systems LLC – DO NOT COPY or TRANSMIT

Weldment and Bearing Assembly, Brake and Pulley

REF	PART NO.	DESCRIPTION	COMMENTS
1	39254	Weldment and Bearing Assembly	Models LWS01A*-3088, LWS01A*-3300, LWS01M*-3088, LWS01M*-3300, LWS01N*-3088, LWS01N*-3300, LWZ01M*-1102 and LWZ01N*-1102
	39253	Weldment and Bearing Assembly	All other models
2	38505P	Brake Kit	
3	735P3	Brake Pad Kit	Includes 3 pads and 6 of item 4
	204253	Silicone Grease	Apply small amount to each new brake pad
4	39739	Screw	
5	35535	Washer	Thin
6	27015	Washer	Thick
7	38007	Pulley Assembly	Models LWB19A*-1109, LWB19B*-1109, LWS01A*-3300, LWS16A*-3300, LWS16A*-3322, LWS16A*K, LWS16B*K, LWS17A*-3300, LWS17A*-3322, LWS17A*K, LWS17B*K, LWY17A*-1109, LWY17B*-1109, LWY45A*-1109 and LWY45B*-1109
	204942	Pulley	Models AWN552SN301AW01, AWN552SN301NW22, AWN552SN301NW29, AWNA62SN301AW01, FWN311SP301NW10, FWN311SP301NW22, LWG74A*-3050, LWK23A*-3050, LWK24A*-3050, LWK24N*-3050, LWK73A*-3050, LWK74A*-3050, LWK74N*-3050, LWN311SP301NW22, LWN311WP301NW22, LWN312SP301AW01, LWS01A*-3088, LWS01M*-3088, LWS01N*-3088, LWS11A*-3062, LWS11N*-3062, LWS16A*-3000, LWS16A*-3022, LWS16M*-3000, LWS16M*-3022, LWS16N*-3022, LWS17A*-3000, LWS17A*-3022, LWS17A*-3028, LWS17A*-3050, LWS17A*B3020, LWS17A*B3069, LWS17M*-3000, LWS17M*-3022, LWS17M*-3050, LWS17M*B3020, LWS17M*B3069, LWS17N*-3000, LWS17N*-3022, LWS17N*-3028, LWS17N*B3020, LWS17N*B3069, LWS21A*-3062, LWS21N*-3062, LWS42M*-3050, LWZ17A*-3000, LWZ17A*B3020, LWZ17A*B3069, LWZ17M*-3000, LWZ17M*B3020, LWZ17M*B3069, LWZ17N*-3022, LWZ17N*B3020, LWZ17N*B3069 and TWN311SP301NW22
	204486	Pulley	All other models
8	27220	Screw	
9	26509	Washer	
10	38008	Helix	
11	28944RP	Lower Bearing	

*** Add Letter To Designate Color. L - Almond Q - Bisque W - White**

© Copyright, Alliance Laundry Systems LLC – DO NOT COPY or TRANSMIT

Transmission Assembly (Drawing 1 of 2)

All Models Except AWZ17N*-1102, AWZ44N*-1102, AWZ45N*-1102, AWZ51N*-1102, AWZ52N*-1102, AWZ53N*-1102, ZWN311SP111CW01, ZWN402PP111CW01, ZWN412SP111CW01 and ZWN432SP111CW01

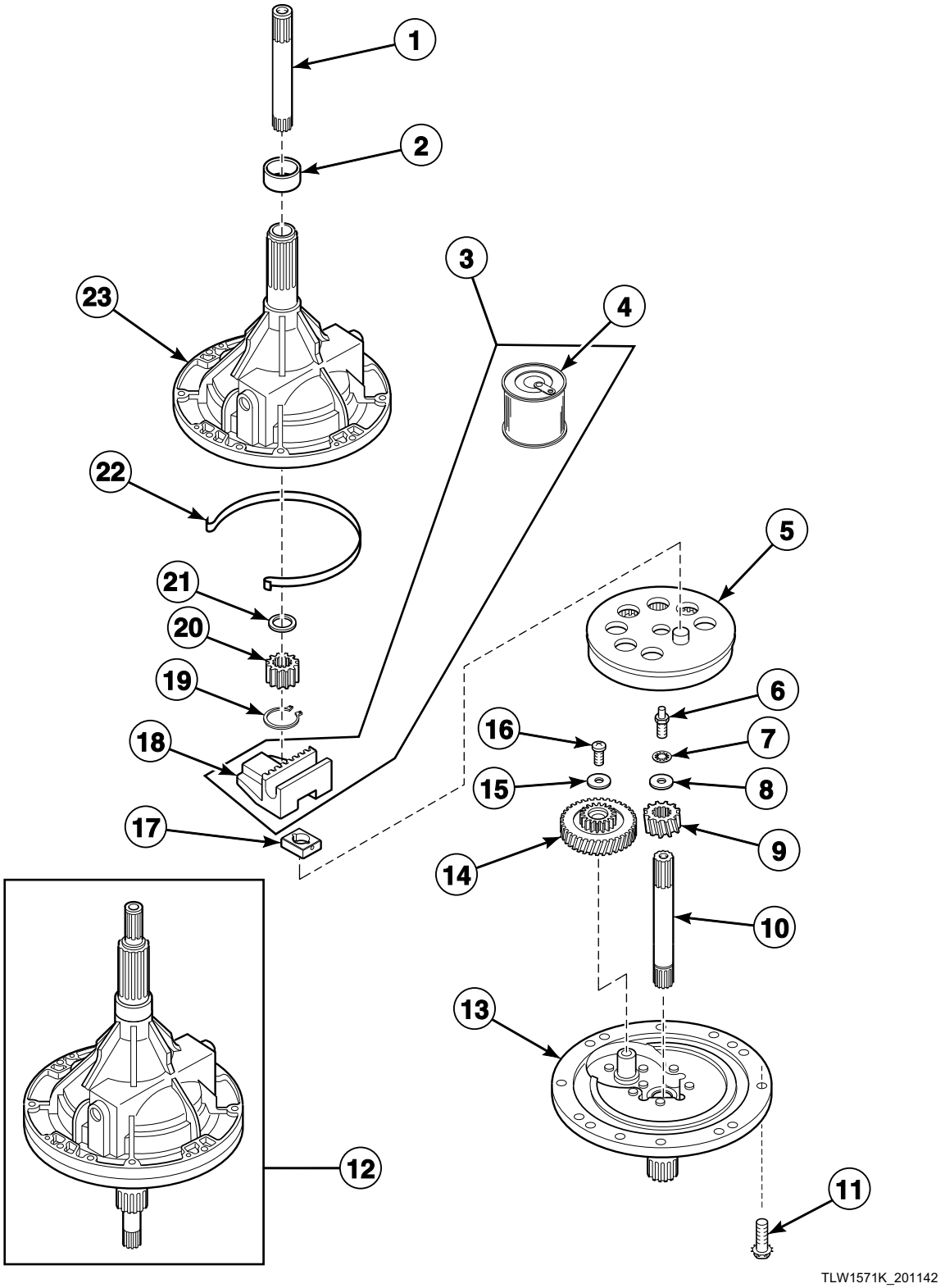

© Copyright, Alliance Laundry Systems LLC – DO NOT COPY or TRANSMIT

Transmission Assembly (Drawing 1 of 2)

REF	PART NO.	DESCRIPTION	COMMENTS
	27604P	Anti-Seize Compound	Apply to smooth area of both the upper and lower transmission tube that will be contacting the upper and lower bearings and apply to spline area of upper and lower transmission tube that will be contacting the washtub
	37577P	Transmission Sealant	Use between transmission case and cover
1	36570P	Output Shaft	
2	201212	Hub Spacer	Models AWN552SN301AW01, AWN552SN301NW22, AWN552SN301NW29, AWNA62SN301AW01, FWN311SP301NW10, FWN311SP301NW22, LWD51N*-1100, LWD52N*-1100, LWH16N*-3322, LWH18N*-3322, LWK24N*-3050, LWK74N*-3050, LWN311PP111NW22, LWN311SP101NW22, LWN311SP111NW22, LWN311SP111TW05, LWN311SP301NW22, LWN311SP331NW22, LWN311SP541NW23, LWN311SP541RW01, LWN311WP101NW22, LWN311WP111NW22, LWN311WP301NW22, LWN311WP331NW22, LWN311WP541NW23, LWN311WP541RW01, LWN312SP301AW01, LWN412SP111MW33, LWS01N*-3088, LWS01N*-3300, LWS02N*-1122, LWS11N*-3062, LWS16N*-1000, LWS16N*-1122, LWS16N*-3022, LWS16N*-3322, LWS16N*-5423, LWS16N*K, LWS17N*-1000, LWS17N*-1122, LWS17N*-1127, LWS17N*-3000, LWS17N*-3022, LWS17N*-3028, LWS17N*-3300, LWS17N*-3322, LWS17N*-5423, LWS17N*B3020, LWS17N*B3069, LWS17N*K, LWS21N*-3062, LWS42N*-3050, LWS45N*-1127, LWS45N*-1130, LWS52N*-1127, LWT42N*-1100, LWT52N*-1100, LWZ01N*-1102, LWZ02N*-1102, LWZ16N*-1000, LWZ17N*-3022, LWZ17N*B3020, LWZ17N*B3069, LWZ20N*-3300, LWZ22N*-1102, LWZ42N*-1102, LWZ52N*-1102, LWZ77N*-1102, MWN311SP111TW06, TWN311SP301NW22, YWN311PP111CW01 and YWN321SP541RW01; Included in 766P3A Hub and Lip Seal Kit
3	RB150004	Transmission Rebuild Kit	Includes items 4, 18 and 37577P Transmission Sealant
4	27243P	Transmission Oil	1 fill
5	26577	Gear and Stud Assembly	
6	201773	Screw	
7	21456	Washer	Models through Serial No. 9712011370
8	26509	Washer	
9	37406P	Drive Pinion	Use with 38826P Transmission Assembly
	37405	Drive Pinion	Use with 38165P Transmission Assembly
10	38268P	Input Shaft	
11	32814	Screw	
12	38165P	Transmission Assembly	710 RPM; High spin
13	37471	Transmission Cover Assembly	
14	37403P	Reduction Gear	Use with 38826P Transmission Assembly
	37404P	Reduction Gear	Use with 38165P Transmission Assembly
15	29260	Washer	
16	29273	Screw	
17	26493	Slide	
18	201664	Rack	
19	27197	Retaining Ring	
20	27003	Agitator Pinion	
21	35092	Washer	
22	38864	Gear Sleeve	
23	33223P	Transmission Case Assembly	

*** Add Letter To Designate Color. L - Almond Q - Bisque W - White**

© Copyright, Alliance Laundry Systems LLC – DO NOT COPY or TRANSMIT

Transmission Assembly (Drawing 2 of 2)

Models AWZ17N*-1102, AWZ44N*-1102, AWZ45N*-1102, AWZ51N*-1102, AWZ52N*-1102, AWZ53N*-1102, ZWN311SP111CW01, ZWN402PP111CW01, ZWN412SP111CW01 and ZWN432SP111CW01

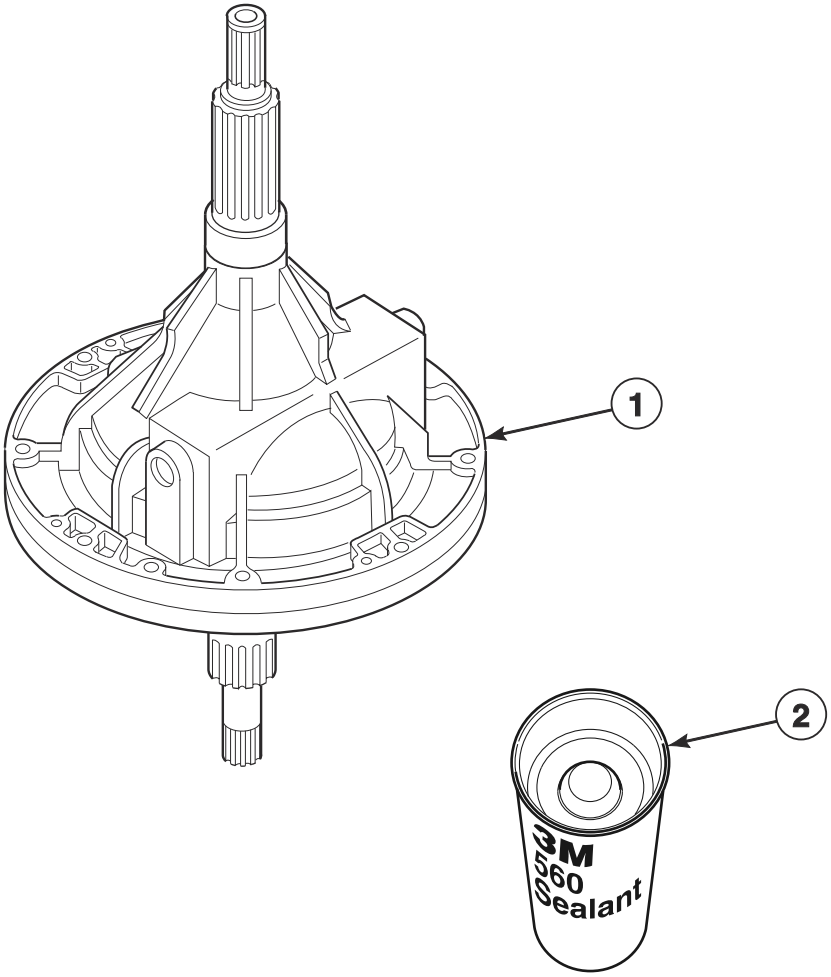

TLW1838P_201142

© Copyright, Alliance Laundry Systems LLC – DO NOT COPY or TRANSMIT

Transmission Assembly (Drawing 2 of 2)

REF	PART NO.	DESCRIPTION	COMMENTS
	27604P	Anti-Seize Compound	Apply to smooth area of both the upper and lower transmission tube that will be contacting the upper and lower bearings and apply to spline area of upper and lower transmission tube that will be contacting the washtub
1	203768	Transmission Assembly	Includes item 2 and Hub and Lip Seal Kit; Lip seal units only
2	200996P	Sealant	

© Copyright, Alliance Laundry Systems LLC – DO NOT COPY or TRANSMIT

Front Panel, Base Assembly and Cabinet Kit

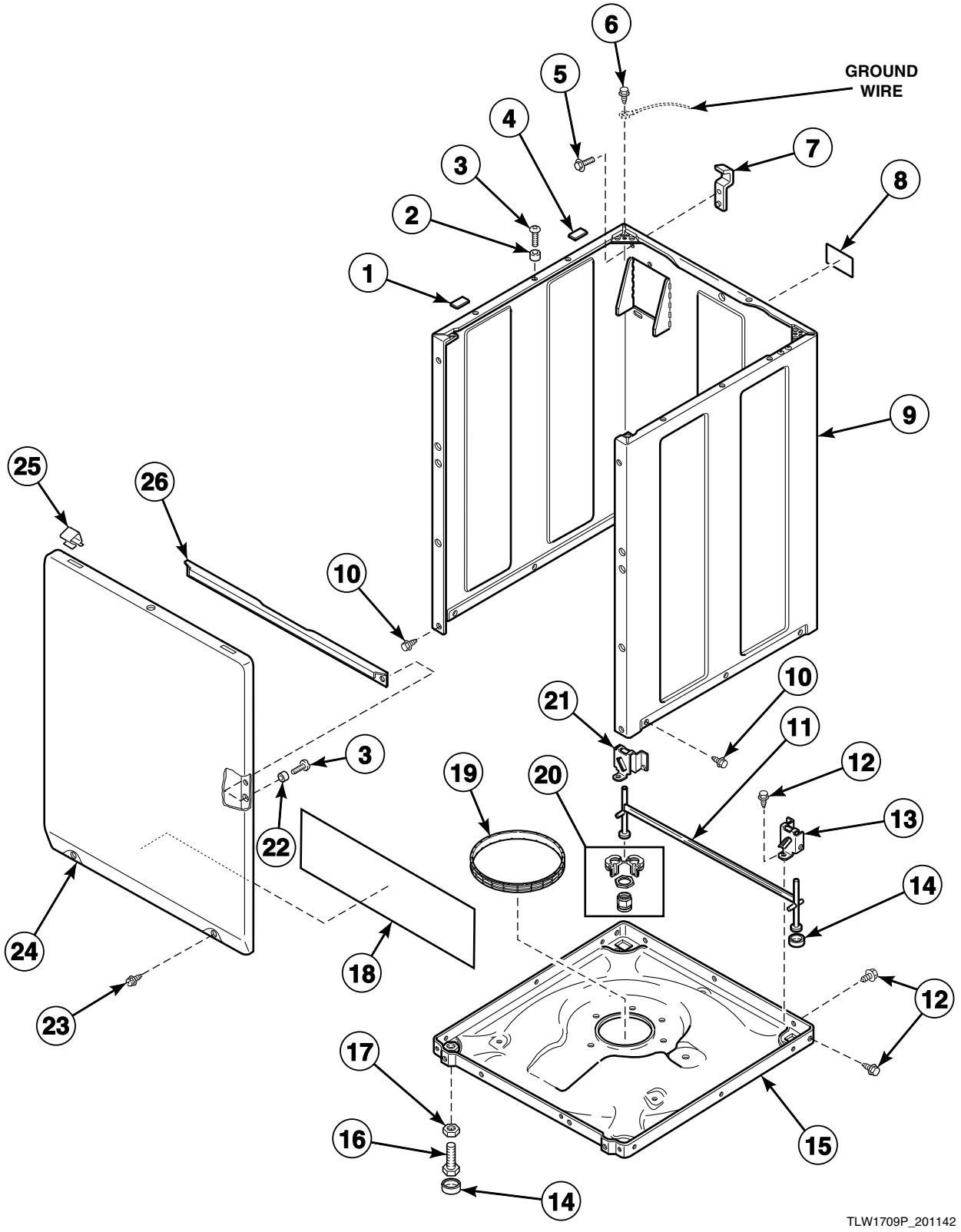

© Copyright, Alliance Laundry Systems LLC – DO NOT COPY or TRANSMIT

Front Panel, Base Assembly and Cabinet Kit

REF	PART NO.	DESCRIPTION	COMMENTS
	122P4P	Porcelain Touch-Up Paint	White
	370P4P	Porcelain Touch-Up Paint	Bisque
	215P4P	Porcelain Touch-Up Paint	Almond
	202957	Foam Pad	Models AWNA62SN301AW01, LWN311SP541RW01, LWN311WP541RW01, LWS42N*-3050 and YWN321SP541RW01; Starting Serial No. 1404009801
1	56128	Bumper Pad	
2	56079	Panel Locator	
3	39733	Screw	
4	36226	Bumper Pad	
5	51780	Screw	
6	52909	Screw	
7	27103	Hold-Down Lug Hinge	
8	202258	Warning Label	Model LWS17N*-3028
	803260	Warning Label	All other models
9	38612WP	Service Cabinet Kit	White
	38612LP	Service Cabinet Kit	Almond
	38612QP	Service Cabinet Kit	Bisque
10	27196	Screw	
11	34443	Leg and Stabilizer Assembly	
12	35148	Screw	
13	36036	Bracket	Right
14	34318	Rubber Foot	
15	39788	Base Assembly	
16	34319	Leveling Leg	
17	21899	Nut	
18	36204	Front Panel Pad	Models AWZ44N*-1102, AWZ45N*-1102, AWZ51N*-1102, AWZ52N*-1102, AWZ53N*-1102, CWN412SP111CW01, DWN412SP111CW01, LWD51N*-1100, LWD52M*-1100, LWD52N*-1100, LWS52N*-1127, LWT42N*-1100, LWT52N*-1100, LWZ22M*-1102, LWZ22N*-1102, LWZ42M*-1102, LWZ42N*-1102, LWZ52M*-1102, LWZ52N*-1102, LWZ77M*-1102, LWZ77N*-1102, ZWN402PP111CW01, ZWN412SP111CW01 and ZWN432SP111CW01
19	37937	Friction Ring	
20	566P3	Adjustable Leg Extension Kit	
21	36037	Bracket	Left
22	28102	Panel Locator	
23	38272	Screw	
24	204870	Front Panel	White
	38335LP	Front Panel	Almond
	38335QP	Front Panel	Bisque
25	35865	Hold-Down Clip	Models LWS17A*B3069, LWS17M*B3069, LWS17N*B3069, LWZ17A*B3069, LWZ17M*B3069 and LWZ17N*B3069; New style panel attachment for all other models
26	35097	Front Panel Brace	

*** Add Letter To Designate Color. L - Almond Q - Bisque W - White**

© Copyright, Alliance Laundry Systems LLC – DO NOT COPY or TRANSMIT

Mixing Valve and Motor Connection Blocks, Terminals and Extractor Tool

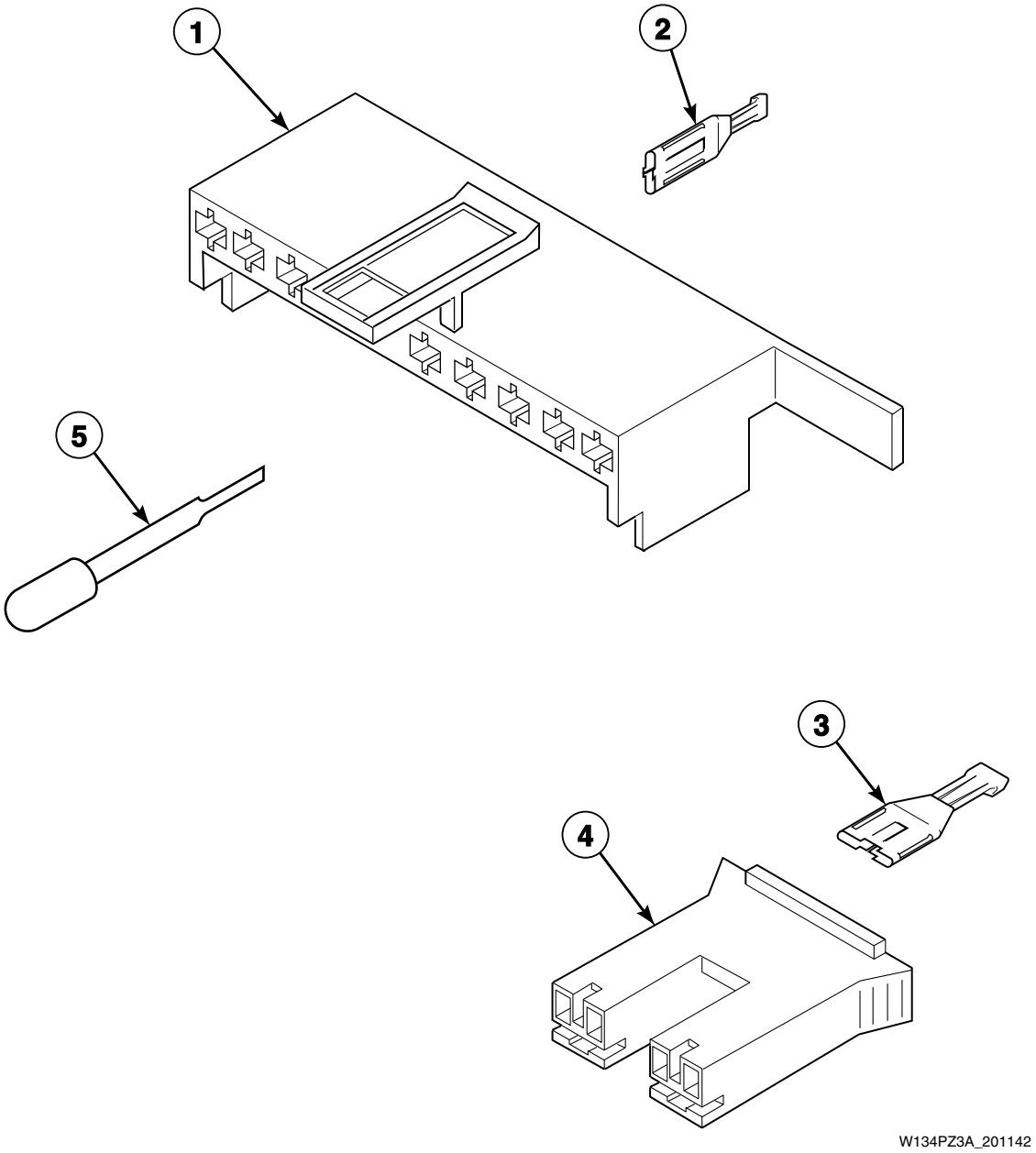

© Copyright, Alliance Laundry Systems LLC – DO NOT COPY or TRANSMIT

Mixing Valve and Motor Connection Blocks, Terminals and Extractor Tool

REF	PART NO.	DESCRIPTION	COMMENTS
1	34677	10 Circuit Plug	Motor
2	00188	Female Terminal	For 1 or 2 wire application
3	00121	Female Spade Terminal	1/4 inch
4	34675	Mixing Valve Plug	Natural
	34676	Mixing Valve Plug	Red
5	283P4	Terminal Extractor Tool	

© Copyright, Alliance Laundry Systems LLC – DO NOT COPY or TRANSMIT

Power Cord

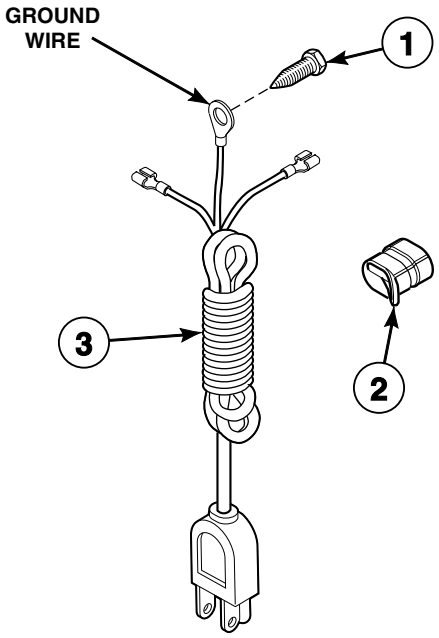

TLW1526P_201142

© Copyright, Alliance Laundry Systems LLC – DO NOT COPY or TRANSMIT

Power Cord

REF	PART NO.	DESCRIPTION	COMMENTS
1	52909	Screw	
2	38384	Strain Relief	Models AWN552SN301NW29, FWN311SP301NW10, FWN311SP301NW22, LWH16N*-3322, LWH18A*-3322, LWH18N*-3322, LWN311SP301NW22, LWN311SP331NW22, LWN311SP541NW23, LWN311SP541RW01, LWN311WP301NW22, LWN311WP331NW22, LWN311WP541NW23, LWN311WP541RW01, LWS01A*-3088, LWS01A*-3300, LWS01M*-1088, LWS01M*-3088, LWS01M*-3300, LWS01N*-3088, LWS01N*-3300, LWS16A*-3000, LWS16A*-3022, LWS16A*-3300, LWS16A*-3322, LWS16M*-3000, LWS16M*-3022, LWS16M*-3300, LWS16M*-3322, LWS16N*-3022, LWS16N*-3322, LWS16N*-5423, LWS17A*-3000, LWS17A*-3022, LWS17A*-3300, LWS17A*-3322, LWS17M*-3000, LWS17M*-3022, LWS17M*-3300, LWS17M*-3322, LWS17N*-3000, LWS17N*-3022, LWS17N*-3300, LWS17N*-3322, LWS17N*-5423, LWS45N*-1127, LWS52N*-1127, LWZ17A*-3000, LWZ17M*-3000, LWZ17N*-3022, LWZ20M*-3300, LWZ20N*-3300 and YWN321SP541RW01
3	N/A	Lead-In Cord Assembly	Models with 3050 suffix through Serial Nos. beginning 0002
	39931	Power Cord Assembly	Models AWN552SN301AW01, AWN552SN301NW22, AWNA62SN301AW01 and LWN312SP301AW01; Models with 3050 suffix starting Serial Nos. beginning 0002
	N/A	Cord and Terminal Assembly	Models LWS17A*B3069 and LWZ17A*B3069 through Serial No. 00061999
	39925	Power Cord Assembly	Models LWS17A*B3069 and LWZ17A*B3069 starting Serial No. 00062000; Models LWS17M*B3069, LWS17N*B3069, LWZ17M*B3069 and LWZ17N*B3069
	38362P	Lead-In Cord	Models FWN311SP301NW10, FWN311SP301NW22, LWN311SP301NW22, LWN311SP331NW22, LWN311WP301NW22, LWN311WP331NW22, LWS01M*-3300, LWS01N*-3300, LWS16A*-3000, LWS16A*-3022, LWS16A*-3300, LWS16A*-3322, LWS16M*-3000, LWS16M*-3022, LWS16M*-3300, LWS16M*-3322, LWS16N*-3022, LWS16N*-3322, LWS17A*-3000, LWS17A*-3022, LWS17A*-3300, LWS17A*-3322, LWS17M*-3000, LWS17M*-3022, LWS17M*-3300, LWS17M*-3322, LWS17N*-3000, LWS17N*-3022, LWS17N*-3300, LWS17N*-3322, LWZ17N*-3022, LWZ20M*-3300, LWZ20N*-3300 and TWN311SP301NW22
	38363	Lead-In Cord	Models LWH16N*-3322, LWH18A*-3322, LWH18N*-3322, LWN311SP541NW23, LWN311WP541NW23, LWS01A*-3088, LWS01M*-3088, LWS01N*-3088, LWS16N*-5423 and LWS17N*-5423
	N/A	Lead-In Cord	Models LWS11A*-3062 and LWS21A*-3062 through Serial No. 0005012191
	39929	Power Cord Assembly	Models LWS11A*-3062 and LWS21A*-3062 starting Serial No. 0005012192; Models LWS11N*-3062 and LWS21N*-3062
	N/A	Cord Assembly	Models LWS17M*B3020 and LWZ17M*B3020 through Serial No. 0204008035; Models LWS17A*B3020 and LWZ17A*B3020
	39926	Lead-In Cord	Models LWS17M*B3020 and LWZ17M*B3020 starting Serial No. 0204008036; Models LWS17N*B3020 and LWZ17N*B3020
	N/A	Lead-In Cord	Model LWS01A*-3300; Use additional 1/4 inch Amp terminal
	39984	Power Cord Assembly	Models LWS17A*-3028 and LWS17N*-3028
	802012	Power Cord Assembly	Models LWS45N*-1127 and LWS52N*-1127
	202410	Power Cord Assembly	Models LWN311SP541RW01, LWN311WP541RW01 and YWN321SP541RW01
	203518	Lead-In Cord	Model AWN552SN301NW29
	34458	Lead-In Cord	All other models

*** Add Letter To Designate Color. L - Almond Q - Bisque W - White**

N/A = Part no longer available

© Copyright, Alliance Laundry Systems LLC – DO NOT COPY or TRANSMIT

Terminals and Clips

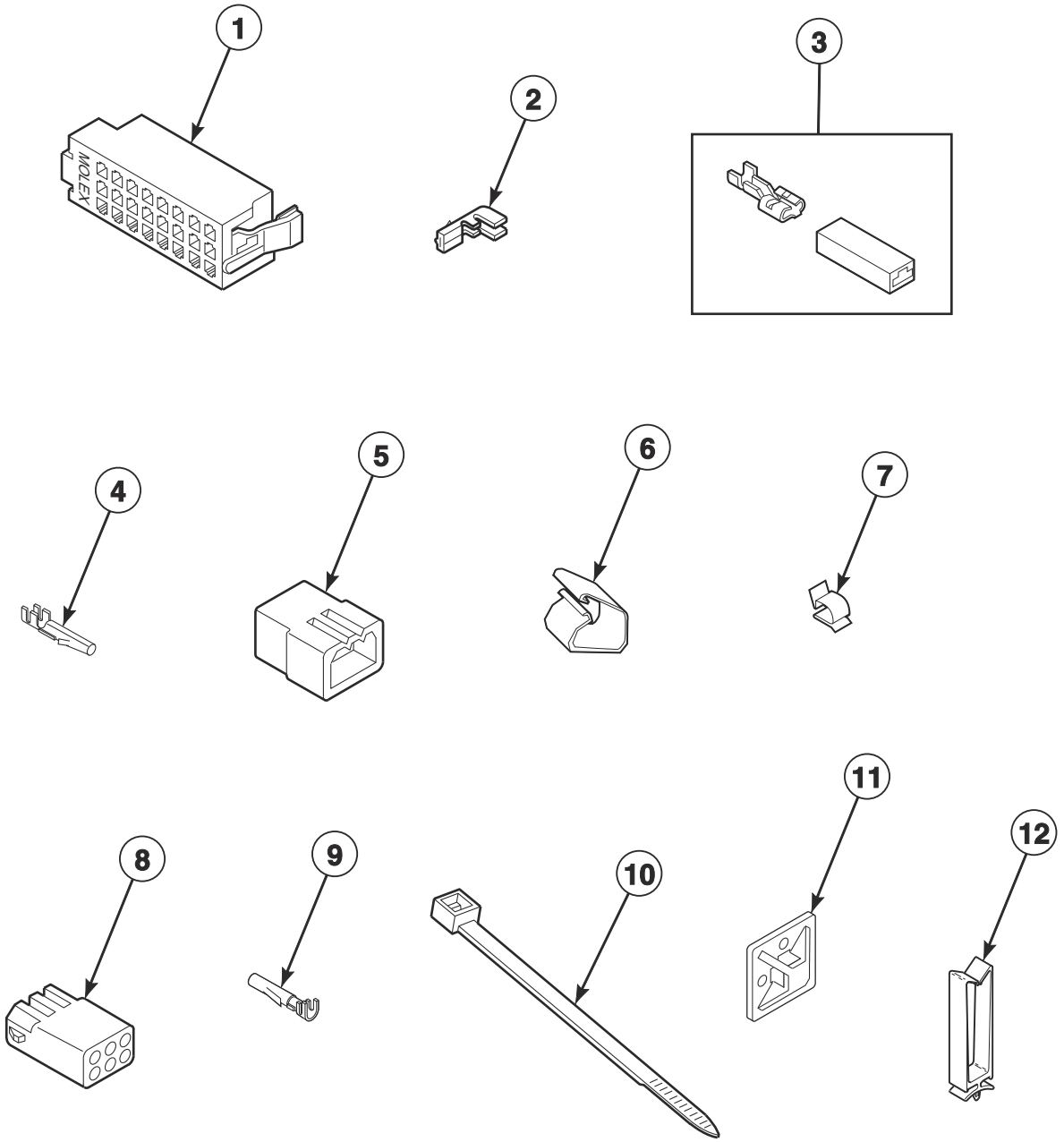

TLW1759P_201142

© Copyright, Alliance Laundry Systems LLC – DO NOT COPY or TRANSMIT

Terminals and Clips

REF	PART NO.	DESCRIPTION	COMMENTS
1	32746	24 Position Housing	Right; Black
	34123	24 Position Housing	Left; White
2	00188	Female Terminal	Used for 1 or 2 wire application
3	00359	Insulated Female Spade Terminal	
4	00116	Male Pin Terminal	
5	23033	9 Circuit Plug	
	23041	6 Circuit Plug	
	26302	1 Circuit Plug	
6	N/A	Harness Clip	
7	21036	Cable Clip	
8	26163	9 Circuit Receptacle	
	26301	1 Circuit Receptacle	
	26708	6 Circuit Receptacle	
9	00117	Female Pin Terminal	
10	55881	Harness Strap	
11	F140602	Tie Wrap Mounting Clamp	Models LWN311SP541RW01, LWN311WP541NW23 and YWN321SP541RW01; Starting Serial No. 1405031688
12	70366201	Wire Clip	0.93 inch wide

N/A = Part no longer available

© Copyright, Alliance Laundry Systems LLC – DO NOT COPY or TRANSMIT

Terminals

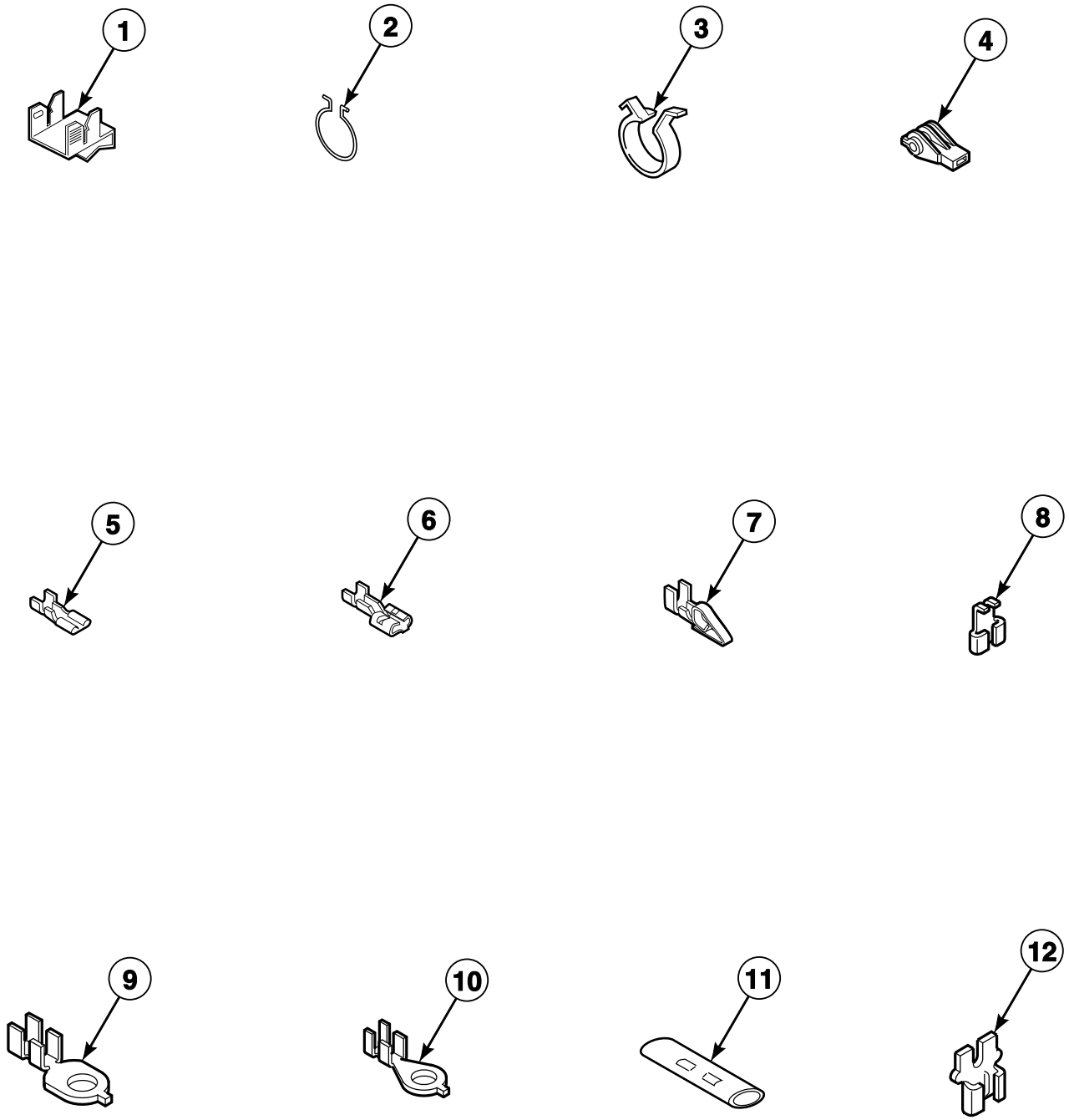

W248PZ3A_201142

© Copyright, Alliance Laundry Systems LLC – DO NOT COPY or TRANSMIT

Terminals

REF	PART NO.	DESCRIPTION	COMMENTS
1	00161	Grounding Clip	
2	51291	Wire Clip	
3	687500	Wire Clip	
4	70210	Insulator	
5	00112	Female Spade Terminal	Small spade
6	00223	Female Spade Terminal	Large spade
7	N/A	Spade Terminal	Female; 1/4 inch
8	00120	Female Flag Terminal	
9	N/A	Ring Terminal	1/4 inch ring
10	00110	Ring Terminal	Small shank
11	21091	Connector	(2) 1/4 inch male spades
12	F140562	Connector	

N/A = Part no longer available

© Copyright, Alliance Laundry Systems LLC – DO NOT COPY or TRANSMIT

Shipping Materials and Special Tools

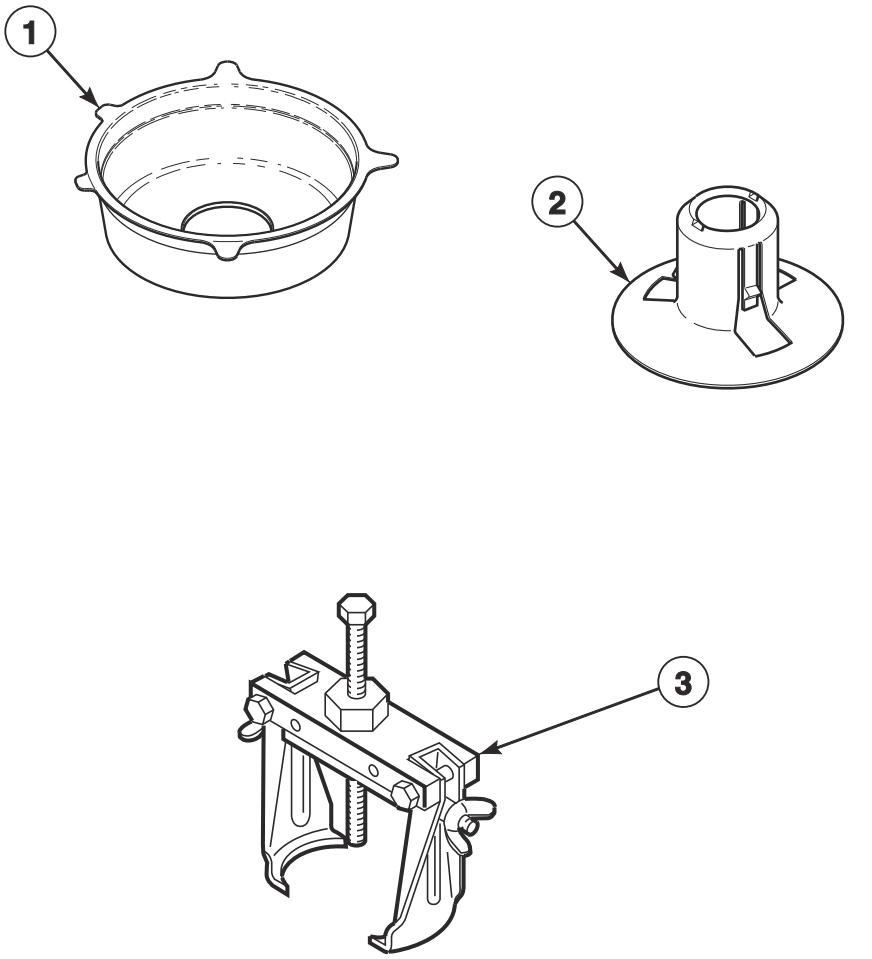

TLW1678P_201142

© Copyright, Alliance Laundry Systems LLC – DO NOT COPY or TRANSMIT

Shipping Materials and Special Tools

REF	PART NO.	DESCRIPTION	COMMENTS
1	204678	Shipping Brace	Install whenever moving washer; Remove before use
2	38149	Shipping Plug	Install before moving washer to prevent tub from damaging cabinet
3	294P4	Agitator Drive Bell Puller	For removal and installation of drive bell to transmission shaft

© Copyright, Alliance Laundry Systems LLC – DO NOT COPY or TRANSMIT

Special Tools

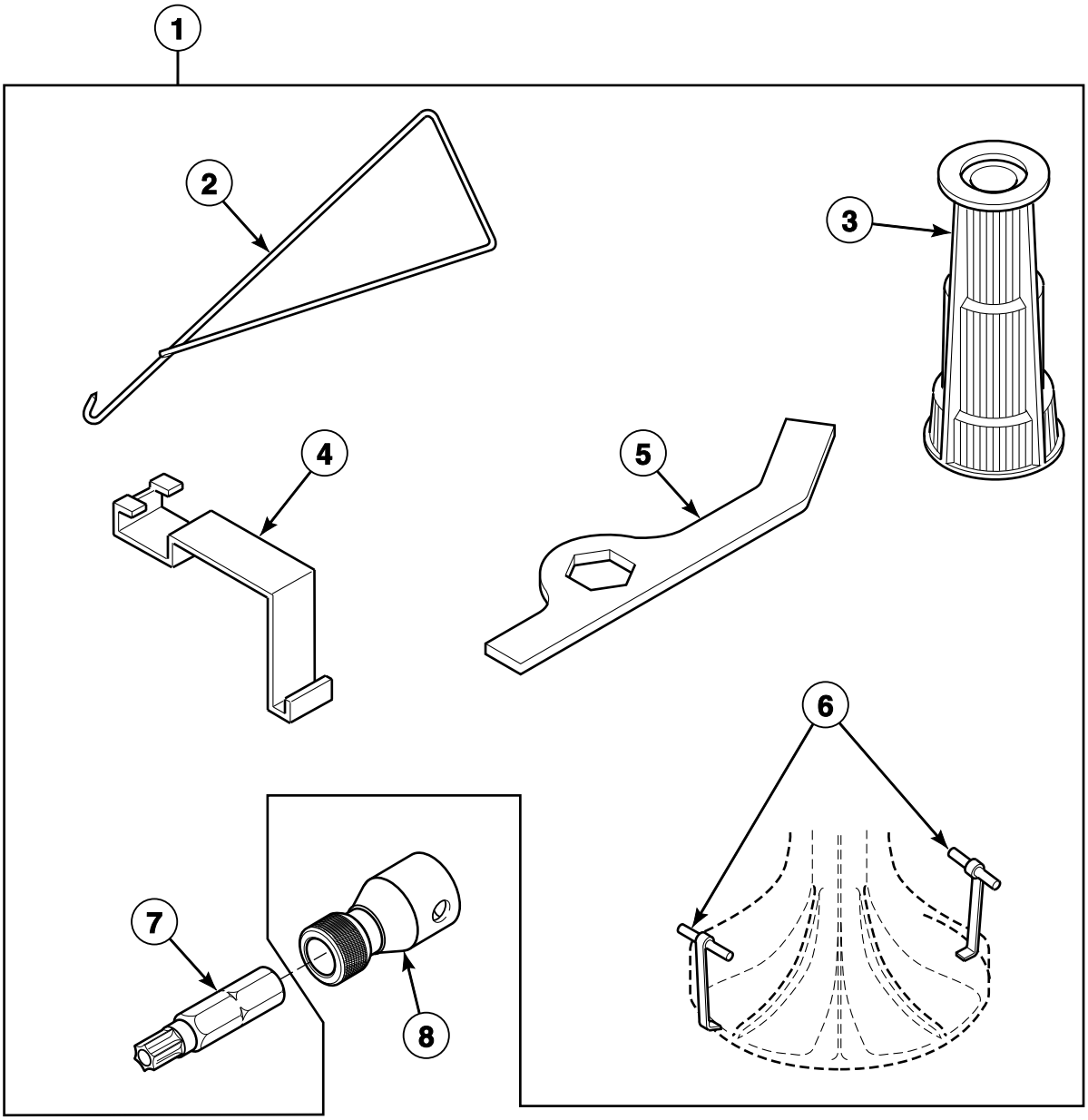

TLW1649P_201142

© Copyright, Alliance Laundry Systems LLC – DO NOT COPY or TRANSMIT

Special Tools

REF	PART NO.	DESCRIPTION	COMMENTS
1	725P3	Tool Kit	Includes items 2-7
2	321P4	Spring Hook Tool	For removal of module springs from outer tub
3	293P4	Drive Bell Seal Tool	For installation of 36425 Bell and Transmission Tube Seal
4	273P4	Tub Cover Removal Tool	Use to install 38359 Tub Cover Gasket in outer tub cover
5	306P4	Hex Wrench Tool	For removal of locknut from washtub hub
6	254P4P	Agitator Hook	Set of 2; Use to remove agitator from drive bell
7	282P4	Torx Bit	T25; For removal and installation of pump attaching screws
8	N/A	Bit Holder	3/8 inch drive

N/A = Part no longer available

© Copyright, Alliance Laundry Systems LLC – DO NOT COPY or TRANSMIT

Wire Harnesses and Wires (Drawing 1 of 3)

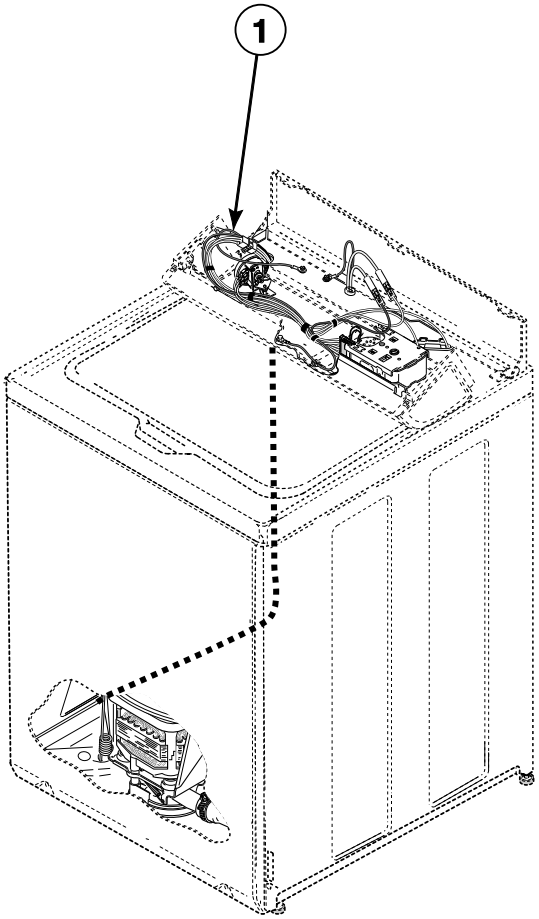

TLW1533P_201142

© Copyright, Alliance Laundry Systems LLC – DO NOT COPY or TRANSMIT

Wire Harnesses and Wires (Drawing 1 of 3)

REF	PART NO.	DESCRIPTION	COMMENTS
	45001	18 Gauge Wire	Black; Order wire by foot and terminals as required
	45380	12 Gauge Wire	Orange; Order wire by foot and terminals as required
1	201607P	Harness Assembly	Model AWZ53N*-1102
	38651	Hood Wire Harness Assembly	Models LWB19A*-1109, LWB19B*-1109, LWB19M*-1109 and LWN412SP111MW33
	38879	Hood Wire Harness Assembly	Models AWZ52N*-1102, LWD52M*-1100, LWD52N*-1100, LWS52N*-1127, LWT52N*-1100, LWZ52M*-1102 and LWZ52N*-1102
	39808	Hood Wire Harness Assembly	Models LWK23A*-3050, LWK24A*-3050 and LWK24N*-3050
	39809P	Hood Wire Harness Assembly	Models LWG74A*-3050, LWK73A*-3050, LWK74A*-3050 and LWK74N*-3050
	N/A	Hood Wire Harness Assembly	Model LWS11A*-3062 through Serial No. 0007000815; Model LWS21A*-3062 through Serial No. 0004002933
	200601	Hood Wire Harness Assembly	Model LWS11A*-3062 starting Serial No. 0007000816; Model LWS21A*-3062 starting Serial No. 0004002934
	N/A	Hood Wire Harness Assembly	Models LWS17A*B3069, LWS17M*B3069, LWZ17A*B3069 and LWZ17M*B3069 through Serial No. 00061999; Models LWS17A*B3020 and LWZ17A*B3020
	200681	Hood Wire Harness Assembly	Models LWS17A*B3069, LWS17M*B3069, LWZ17A*B3069 and LWZ17M*B3069 starting Serial No. 00062000; Models LWS17N*B3069 and LWZ17N*B3069
	N/A	Hood Wire Harness Assembly	Models LWS17M*B3020, LWS17N*B3020, LWZ17M*B3020 and LWZ17N*B3020 through Serial No. 0204008035
	38651	Hood Wire Harness Assembly	Models AWZ44N*-1102, CWN412SP111CW01, LWN312SP301AW01, LWS42M*-3050, LWS42N*-3050, ZWN402PP111CW01 and ZWN412SP111CW01
	39499P	Hood Harness Assembly	Models AWZ45N*-1102, LWS45M*-1127, LWS45N*-1127, LWS45N*-1130, LWT42N*-1100, LWY45A*-1109, LWY45B*-1109, LWY45M*-1109, LWZ22M*-1102, LWZ22N*-1102, LWZ42M*-1102 and LWZ42N*-1102
	200687P	Hood Harness Assembly	Models LWZ01M*-1102, LWZ01N*-1102, LWZ20M*-3300 and LWZ20N*-3300
	38872P	Hood Wire Harness Assembly	Models LWZ77M*-1102 and LWZ77N*-1102
	201851P	Hood Wire Harness Assembly	Models AWZ51N*-1102, DWN412SP111CW01, LWD51N*-1100 and ZWN432SP111CW01
	202291	Hood Wire Harness Assembly	Models AWN552SN301AW01, AWN552SN301NW22 and AWN552SN301NW29
	202478	Hood Wire Harness Assembly	Model AWNA62SN301AW01
	38657P	Hood Wire Harness Assembly	All other models

*** Add Letter To Designate Color. L - Almond Q - Bisque W - White**

N/A = Part no longer available

NOTE: Individual wires are not available separately. Order complete harness, or order wire by the foot. When applying terminals to wires, it is recommended that the terminals be soldered to the wires.

© Copyright, Alliance Laundry Systems LLC – DO NOT COPY or TRANSMIT

Wire Harnesses and Wires (Drawing 2 of 3)

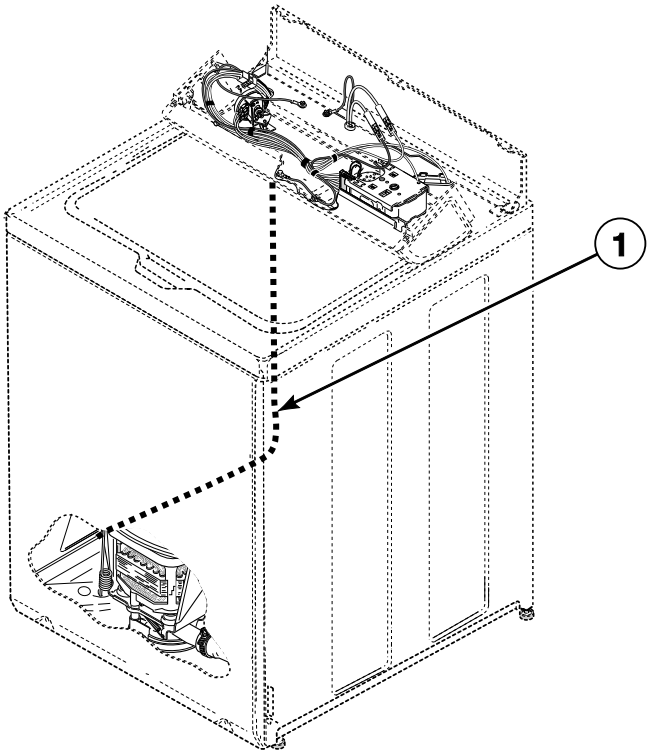

TLW1533PA_201142

© Copyright, Alliance Laundry Systems LLC – DO NOT COPY or TRANSMIT

Wire Harnesses and Wires (Drawing 2 of 3)

REF	PART NO.	DESCRIPTION	COMMENTS
1	201328P	Base Harness Assembly	Model AWZ53N*-1102
	38660P	Base Wire Harness Assembly	Models AWZ44N*-1102, AWZ51N*-1102, CWN412SP111CW01, LWD51N*-1100, LWS45N*-1127, LWS45N*-1130 and LWS52N*-1127 through Serial Nos. beginning 0904; Models AWZ45N*-1102, AWZ52N*-1102, LWB19A*-1109, LWB19B*-1109, LWB19M*-1109, LWD52M*-1100, LWD52N*-1100, LWS45M*-1127, LWT42N*-1100, LWT52N*-1100, LWY45A*-1109, LWY45B*-1109, LWY45M*-1109, LWZ22M*-1102, LWZ22N*-1102, LWZ42M*-1102, LWZ42N*-1102, LWZ52M*-1102 and LWZ52N*-1102
	38661P	Wire Harness Assembly	Base; Models AWZ44N*-1102, AWZ51N*-1102, CWN412SP111CW01, LWD51N*-1100, LWN412SP111MW33, LWS45N*-1127, LWS45N*-1130 and LWS52N*-1127 starting Serial Nos. beginning 0904; Models LWS01M*-3088 and LWS17M*-3000 starting Serial Nos. beginning 0302; Models DWN412SP111CW01, LWS01N*-3088, LWS17A*-3028, LWS17M*B3020, LWS17N*-3000, LWS17N*-3028, LWS17N*B3020, LWZ17M*B3020, LWZ17N*B3020, ZWN402PP111CW01, ZWN412SP111CW01 and ZWN432SP111CW01
	201465P	Base Wire Harness Assembly	Model LWK24A*-3050 through Serial No. 0210015170; Models AWN552SN301AW01, AWN552SN301NW22, AWN552SN301NW29, LWG74A*-3050, LWK23A*-3050, LWK73A*-3050, LWK74A*-3050 and LWK74N*-3050
	N/A	Base Wire Harness Assembly	Use with 201062 Motor Assembly; Model LWK24A*-3050 starting Serial No. 0210015171; Model LWK24N*-3050 through Serial Nos. beginning 0512
	201436	Base Wire Harness Assembly	Use with 201434 Motor Assembly; Model LWK24N*-3050 starting Serial Nos. beginning 0512
	N/A	Base Wire Harness Assembly	Model LWS11A*-3062 through Serial No. 0007000815; Model LWS21A*-3062 through Serial No. 0004002933
	201065	Base Wire Harness Assembly	Use with 201062 Motor Assembly; Model LWS11A*-3062 starting Serial No. 0210012292; Model LWS21A*-3062 starting Serial No. 0210014993; Models LWS16M*-3000, LWS16M*-3022 and LWS17M*-3022 starting Serial Nos. beginning 0302; Models LWS11N*-3062, LWS16N*-3022, LWS17N*-3022, LWS21N*-3062 and LWZ17N*-3022 through Serial Nos. beginning 0512
	201435	Base Wire Harness Assembly	Use with 201434 Motor Assembly; Models FWN311SP301NW10, FWN311SP301NW22, LWN311SP301NW22, LWN311WP301NW22 and TWN311SP301NW22; Models LWS11N*-3062, LWS16N*-3022, LWS17N*-3022, LWS21N*-3062 and LWZ17N*-3022 starting Serial Nos. beginning 0512
	39956P	Base Wire Harness Assembly	Use with 200586 Motor Assembly; Models LWS17A*-3050, LWS17M*-3050 and LWS42M*-3050; Model LWS42N*-3050 through Serial Nos. beginning 0506
	201466	Base Wire Harness Assembly	Use with 201433 Motor Assembly; Models LWN312SP301AW01, LWS17A*-3050, LWS17M*-3050 and LWS42M*-3050; Model LWS42N*-3050 starting Serial Nos. beginning 0506
	38771P	Base Harness Assembly	Models LWZ77M*-1102 and LWZ77N*-1102
	202528	Base Harness Assembly	Model AWNA62SN301AW01

*** Add Letter To Designate Color. L - Almond Q - Bisque W - White**

N/A = Part no longer available

NOTE: Individual wires are not available separately. Order complete harness, or order wire by the foot. When applying terminals to wires, it is recommended that the terminals be soldered to the wires.

© Copyright, Alliance Laundry Systems LLC – DO NOT COPY or TRANSMIT

Wire Harnesses and Wires (Drawing 3 of 3)

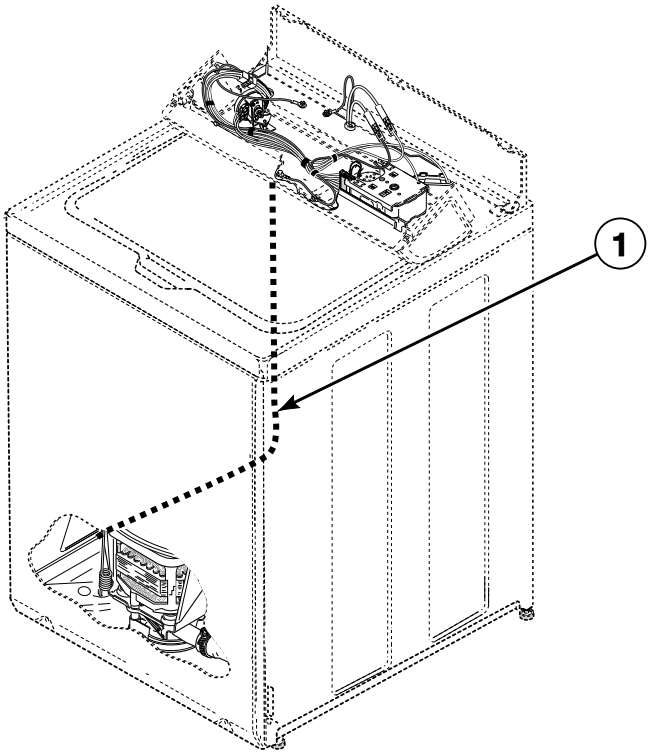

TLW1533PA_201142

© Copyright, Alliance Laundry Systems LLC – DO NOT COPY or TRANSMIT

Wire Harnesses and Wires (Drawing 3 of 3)

REF	PART NO.	DESCRIPTION	COMMENTS
1	38772P	Base Wire Harness Assembly	Models LWS01M*-3088, LWS16M*-3000, LWS16M*-3022, LWS17M*-3000 and LWS17M*-3022 through Serial Nos. beginning 0302; Model LWS11A*-3062 starting Serial No. 0007000816 and continuing through Serial No. 0210012291; Model LWS21A*-3062 starting Serial No. 0004002934 and continuing through Serial No. 0210014992; Models AWZ17N*-1102, CWN311SP111CW01, LWH16N*-3322, LWH18A*-3322, LWH18N*-3322, LWN311PP111NW22, LWN311SP101NW22, LWN311SP111NW22, LWN311SP111TW05, LWN311SP331NW22, LWN311SP541NW23, LWN311SP541RW01, LWN311WP101NW22, LWN311WP111NW22, LWN311WP331NW22, LWN311WP541NW23, LWN311WP541RW01, LWS01A*-1000, LWS01A*-1088, LWS01A*-3088, LWS01A*-3300, LWS01M*-1000, LWS01M*-1088, LWS01M*-3300, LWS01N*-3300, LWS02N*-1122, LWS16A*-1000, LWS16A*-3000, LWS16A*-3022, LWS16A*-3300, LWS16A*-3322, LWS16A*K, LWS16B*K, LWS16M*-1000, LWS16M*-3300, LWS16M*-3322, LWS16M*K, LWS16N*-1000, LWS16N*-1122, LWS16N*-3322, LWS16N*-5423, LWS16N*K, LWS17A*-1000, LWS17A*-3000, LWS17A*-3022, LWS17A*-3300, LWS17A*-3322, LWS17A*B3020, LWS17A*B3069, LWS17A*K, LWS17B*K, LWS17M*-1000, LWS17M*-1127, LWS17M*-3300, LWS17M*-3322, LWS17M*B3069, LWS17M*K, LWS17N*-1000, LWS17N*-1122, LWS17N*-1127, LWS17N*-3300, LWS17N*-3322, LWS17N*-5423, LWS17N*B3069, LWS17N*K, LWY17A*-1109, LWY17B*-1109, LWY17M*-1109, LWZ01M*-1102, LWZ01N*-1102, LWZ02N*-1102, LWZ16A*-1000, LWZ16M*-1000, LWZ16N*-1000, LWZ17A*-3000, LWZ17A*B3020, LWZ17A*B3069, LWZ17M*-3000, LWZ17M*B3069, LWZ17N*B3069, LWZ20M*-3300, LWZ20N*-3300, MWN311SP111TW06, YWN311PP111CW01, YWN321SP541RW01 and ZWN311SP111CW01

*** Add Letter To Designate Color. L - Almond Q - Bisque W - White**

NOTE: Individual wires are not available separately. Order complete harness, or order wire by the foot. When applying terminals to wires, it is recommended that the terminals be soldered to the wires.

© Copyright, Alliance Laundry Systems LLC – DO NOT COPY or TRANSMIT

Notes

© Copyright, Alliance Laundry Systems LLC – DO NOT COPY or TRANSMIT

Parts Index

A

Adjustable Leg Extension Kit
566P3 99

Agitate and Spin Belt
200923 ..... 57, 61, 63, 67, 69
37820 67
38174 ..... 53, 67
38749 ..... 57, 61, 63, 67
39435 ..... 61, 63

Agitator
33174 ..... 71, 73, 75, 77, 79
33514 73

Agitator Cap
36515 ..... 71, 73

Agitator Drive Bell Puller
294P4 109

Agitator Hook
254P4P 111

Agitator Pinion
27003 95

Anti-Seize Compound
27604P 95, 97

B

Backflow Preventer
34500 ..... 45, 49

Balance Ring Assembly
39836 ..... 77, 79
39837 ..... 71, 73, 75, 77, 79

Base Assembly
39788 99

Base Harness Assembly
201328P 115
202528 115
38771P 115

Base Wire Harness Assembly
201065 115
201435 115
201436 115
201465P 115
201466 115
38660P 115
38772P 117
39956P 115

Bearing Housing Assembly
27182 85

Bell and Transmission Tube Seal
36425 ..... 71, 73, 75, 77, 79

Bell Plug
36511 ..... 71, 73, 75, 77, 79

Belt and Pump Kit
RB150002 67
RB150003 ..... 53, 67

Bleach Dispenser
34776 ..... 37, 43

Bolt
32184 37

Bracket
36036 99
36037 99

Brake Kit
38505P 93

Brake Pad Kit
735P3 93

Bumper
21685 ..... 37, 39

Bumper Pad
36226 99
56128 99

Bushing
33446 ..... 37, 39

C

Cable Clip
21036 ..... 81, 83, 85, 105

Cable Connection Box
39922 ..... 13, 19, 21, 23, 31

Cap
24145 ..... 45, 49

Capacitor
203140 59
37377 65

Capacitor and Clamp Kit
39259P 55, 59, 65

Capacitor Assembly
39661 53

Capacitor Clamp
37535 ..... 53, 55, 59, 65

Circuit Board Support
D501523 17

Connector
F140562 107
21091 107

Control Assembly
202450 23
202843P 23

Control Knob Assembly
803119P 11, 15, 23, 31, 33

Control Lid Lock Assembly
37225P 17

Control Panel
202077W 33
202078W 15
202113W 11
202236W 7, 9, 33
202238W 7
204434 33

Control Support Panel
202458 23
38171 ..... 7, 9, 11, 13, 15, 17, 19, 21, 25, 27, 29

Counterweight Assembly
38769 ..... 81, 83, 85
912P3 ..... 81, 85

Cover Plate
37828P 37

N/A items do not appear in index.

© Copyright, Alliance Laundry Systems LLC – DO NOT COPY or TRANSMIT

Cycle Switch
801240 23
Cycle Switch Bracket
801390 23

D

Door Lock Spacer
201414 37
Drain Extension Kit
451P3 87
Drain Hose
28293 87
39864 89
39893 91
39894 91
Drain Hose Elbow
35766 87
Drain Hose Sleeve
33615 ..... 89, 91
Drain Pump
39255P 87, 89
Drive Bell and Seal Kit
39508P 71, 73, 75, 77, 79
Drive Bell Seal Tool
293P4 111
Drive Pinion
37405 95
37406P 95

E

Electrical Shock Label
D502511 ..... 13, 17, 19, 21, 31, 37, 41, 67
End Panel
D504008L 7, 9, 11, 13, 15, 17, 19, 21, 25, 27, 29
D504008QP 7, 9, 11, 13, 15, 17, 19, 21, 25, 27, 29
D504008WP 7, 9, 11, 13, 15, 17, 19, 21, 23, 25, 27, 29
D504009QP 7, 9, 11, 13, 15, 17, 19, 21, 25, 27, 29
D504009WP 7, 9, 11, 13, 15, 17, 19, 21, 23, 25, 27, 29

F

Fabric Softener Dispenser Assembly
204214 ..... 75, 77, 79
Female Flag Terminal
00120 107
Female Pin Terminal
00117 105
Female Spade Terminal
00112 107
00121 101
00223 107
Female Terminal
00188 ..... 101, 105
Fill Hose
202800 ..... 47, 49
20617 ..... 45, 47, 49
20618 ..... 45, 47, 49
37380 ..... 45, 47, 49
37381 ..... 45, 47, 49
Fill Hose Kit
38349P 45, 47, 49
Flex Vane Agitator
36507 ..... 75, 77, 79
Foam Pad
202957 99
Friction Ring
37937 99
Front Panel
204870 99
38335LP 99
38335QP 99
Front Panel Brace
35097 99
Front Panel Pad
36204 99

G

Gear and Stud Assembly
26577 95
Gear Sleeve
38864 95
Graphic Panel
200599 31
200611 31
200665 15
200666 15
200668 ..... 7, 9, 11, 33
200679W 19, 21
200680W 19, 21
201148 15
201196 15
201211 11
201275Q 15
201425W 11
201427W 33
201512W 11
201513 25
201514W 15
201818W 11
201819W 33
201842W 7
201843W 33
201844W 15
201848W 15
202168W 31
202239W 15
202240W 11
202241W 33
202297W 33
202379W 31
202419W 33
202448W 23
202618W 33
203131W 23
203446W 31
210133 33
38360P 31
38887Q 7, 9, 31, 33
38887W 7, 9, 31, 33
38939W 9, 33
39082W 17

N/A items do not appear in index.

© Copyright, Alliance Laundry Systems LLC – DO NOT COPY or TRANSMIT

39171W 31
39349W 31
39478W 11

Grommet
29175 ..... 81, 83, 85
80262 ..... 37, 41

Grounding Clip
00161 ..... 7, 9, 11, 13, 15, 25, 31, 33, 107

H

Harness Assembly
201607P 113

Harness Strap
55881 105

Helix
38008 93

Hex Wrench Tool
306P4 111

Hinge Gasket
34338 39

Hinge Stop Clip
36519 43

Hold-Down Clip
35358 ..... 7, 9, 11, 13, 15, 17, 19, 21, 23, 25, 29, 31, 37, 41
35865 99
38271 43

Hold-Down Lug Hinge
27103 99

Hood Back Panel
203110 39
37782 ..... 17, 27, 37, 39
39921 ..... 13, 19, 21, 27, 37, 39

Hood Harness Assembly
200687P 113
39499P 113

Hood Wire Harness Assembly
200601 113
200681 113
201851P 113
202291 113
202478 113
38651 113
38657P 113
38872P 113
38879 113
39808 113
39809P 113

Hose Clamp
F200204 ..... 89, 91
20211 87
20391 ..... 87, 89
36801 ..... 45, 47, 49
36802 87
39282 ..... 81, 83, 85
800803 ..... 45, 47, 49

Hose Clip
36985 ..... 81, 83, 85

Hose Coupler
25863 87

Hose Retainer Clip
39177 87

Hose Stand
38732 ..... 87, 89, 91

Housing, 24 Position
32746 105
34123 105

Hub and Lip Seal Kit
766P3A 71, 75, 77, 81, 83

Hub and Seal Kit
646P3 ..... 73, 79

Hub Spacer
201212 95

I

Idler Lever
38011 ..... 53, 57, 61, 63, 67, 69

Idler Lever and Belt Kit
202972 ..... 57, 63, 69

Idler Lever Kit
959P3 ..... 53, 67

Idler Lever Spring
201189 ..... 53, 57, 61, 63, 67
202032 ..... 53, 57, 61, 63, 67, 69
39666 ..... 53, 57, 61, 63, 67

Idler Pulley
38225P 53, 57, 61, 63, 67, 69

Idler Shaft
210186 ..... 53, 57, 61, 63, 67, 69

Indicator Light
801356 23

Indicator Light Lens
801435 23

Inlet Cover
202894 43

Inlet Deflector
202900 43

Input Shaft
38268P 95

Insulated Female Spade Terminal
00359 105

Insulator
70210 107

Isolator Assembly
204062 ..... 53, 55, 59, 67

Isolator Post
38325 ..... 53, 55, 59, 67

K

Knob Assembly
33688 ..... 7, 9, 11, 17, 19, 33
36701L 7, 9, 11, 13, 15, 17, 19, 21, 25, 31, 33
36701Q 7, 9, 11, 13, 15, 17, 19, 21, 25, 31, 33
36701W 7, 9, 11, 13, 15, 17, 19, 21, 25, 31, 33
803168P 23

L

Label
805914 33

N/A items do not appear in index.

© Copyright, Alliance Laundry Systems LLC – DO NOT COPY or TRANSMIT

Lead-In Cord
203518 103
34458 103
38362P 103
38363 103
39926 ..... 13, 103

Lead-In Wire Harness Assembly
39923 ..... 13, 19, 21, 23, 31

Leg and Stabilizer Assembly
34443 99

Leg Plate
27926 ..... 81, 83, 85

Leg Spring
201521 ..... 81, 83
37575 ..... 81, 83, 85
37576 ..... 81, 85

Leveling Leg
34319 99

Lid
201188QP 39
201188WP 39
203078W 39
204700W 39
33552Q 37
33552W 37
37395QP 39
37395WP 39

Lid Hinge
36437 ..... 37, 39
36438 ..... 37, 39
36513 39

Lid Lock Catch Assembly
201307P 37

Lid Lock Gasket
30378 37

Lid Lock Kit
202933 37
837P3 37

Lid Lock Wire Harness Assembly
31973 37

Lid Switch Assembly
37631 35

Lid Switch Indicator Light
39536 ..... 17, 19, 21

Lid Switch Shield
202697 35

Lint Filter
39371 ..... 75, 77, 79

Lower Bearing
28944RP 93

M

Male Pin Terminal
00116 105

Male Tab Terminal
00177 ..... 55, 59

Mixing Valve
201304P 45
201402P 51
201468P 51
202396P 47
203145P 47
203741 51
203742 51
38495P 51
38813P 51
38918P 51
39070P 51

Mixing Valve Bracket
201303 45

Mixing Valve Kit
RB150001 49

Mixing Valve Mounting Bracket
39407 ..... 47, 49

Mixing Valve Plug
34675 101
34676 101

Mixing Valve Screen
24122 ..... 45, 47, 49

Mixing Valve Shield
202899 ..... 47, 49

Mixing Valve-to-Tub Cover Hose
201302P 45
202472 47
38155 49

Motor Assembly
200645P 65
201434P 65
202544P 59
35030P 65

Motor Kit
201433P 59
201615P 65
38034P 65
38036P 65
38037P 53
835P3 ..... 55, 59, 65

Motor Mount
204449 ..... 53, 55, 67

Motor Mount Bracket
200941 ..... 53, 55, 59, 65

Motor Shield
34754 ..... 53, 59, 67
35886 ..... 55, 59

Motor Side Shield
36965 67

N

Nut
M400981 35
02788 17
21899 99
22001 37
27222 85
28447 ..... 17, 19, 21
28803 ..... 53, 57, 61, 63, 67, 69
29220 ..... 71, 73, 75, 77, 79
35423 ..... 53, 55, 59, 67
36020 37
52566 ..... 53, 55, 59, 67
802343 23

N/A items do not appear in index.

© Copyright, Alliance Laundry Systems LLC – DO NOT COPY or TRANSMIT

O

Option Switch
36951 27

O-Ring
36472 ..... 73, 79

Outer Tub
37813P 85

Outer Tub Assembly
203603P 81, 83
203604P 81

Outer Tub Kit
37981P 85

Output Shaft
36570P 95

P

Panel Locator
28102 99
56079 99

Pinch Warning Label
F8615701 81

Pinched Fingers Label
D502506 ..... 81, 85

Plug, 1 Circuit
26302 105

Plug, 10 Circuit
34677 101

Plug, 6 Circuit
23041 105

Plug, 9 Circuit
23033 105

Porcelain Touch-Up Paint
122P4P 99
215P4P 99
370P4P 99

Power Cord Assembly
202410 103
39925 ..... 19, 21, 103
39929 ..... 31, 103
39931 ..... 23, 31, 103
39984 ..... 31, 103
802012 103

Pressure Bulb
30907 ..... 81, 83, 85

Pressure Switch
201609P 7, 9, 11, 15, 25, 29
201927P 7, 9, 11, 15, 27, 29
39035P 7
39286P 9, 13, 17, 19, 21, 23, 27, 29

Pulley
204486 93
204942 93

Pulley Assembly
38007 93

Pump
201566P 53, 57, 61, 67

Pump Bracket
38789 ..... 87, 89

Pump Isolator
38095 ..... 87, 89

Pump Shield
38768 ..... 87, 89

Pump Wire Harness Assembly
38068 ..... 87, 89

Push-to-Start Switch
801434Q 19, 21
801434W 19, 21, 23

R

Rack
201664 95

Rear Hood Panel Shield
202902 39
203070 39

Receptacle, 1 Circuit
26301 105

Receptacle, 6 Circuit
26708 105

Receptacle, 9 Circuit
26163 105

Reduction Gear
37403P 95
37404P 95

Resistor
210100 23

Retainer Clip
36014 ..... 89, 91

Retaining Ring
23748 ..... 53, 57, 61, 63, 67, 69
27197 95

Ring Terminal
00110 107

Rocker Switch
38424L 15, 25
38424Q 15, 25
38424W 15, 25

Roll Pin
10416 ..... 53, 55, 61, 65

Rubber Foot
34318 99

S

Screw
D501086 ..... 7, 9, 11, 13, 15, 21, 23, 25, 27, 29, 43, 51
D501524 23
D503661 ..... 23, 87, 89
M400057 85
M402574 35
Q6516 17
Q6695 37
201773 95
202623 37
20530 ..... 55, 59
22649 37
23008 37
23962 ..... 7, 9, 11, 13, 15, 17, 19, 21, 23, 25, 27, 29, 31, 35, 37, 39, 41
27196 99
27202 ..... 71, 73, 75, 77, 79
27220 93
27229 ..... 53, 57, 61, 63, 67, 69

N/A items do not appear in index.

© Copyright, Alliance Laundry Systems LLC – DO NOT COPY or TRANSMIT

28448 ..... 17, 19, 21
29273 95
32814 95
33562 ..... 43, 45, 47, 49
34337 ..... 37, 39
34565 ..... 53, 57, 61, 67
35148 99
35369 ..... 53, 55, 59, 65, 81, 83, 85
36639 ..... 53, 55, 59, 67
38096 ..... 87, 89
38272 99
39397 ..... 45, 47, 51
39432 ..... 71, 73, 75, 77, 79
39566 ..... 81, 83, 85
39733 99
39739 93
431287 ..... 37, 41
51780 99
52909 ..... 37, 41, 53, 55, 59, 65, 87, 99, 103
685837 23

Sealant
200996P 71, 75, 77, 81, 83, 97

Selector Switch
803568 23

Service Cabinet Kit
38612LP 99
38612QP 99
38612WP 99

Shaft
56461P 53, 57, 61, 63, 67

Shipping Brace
204678 109

Shipping Plug
38149 109

Shock Warning Label
F8614201 41

Silicone Grease
204253 93

Siphon Break Kit
562P3 ..... 87, 89, 91

Slide
26493 95

Speed Switch
35118 15

Spline Insert
29728 ..... 71, 73, 75, 77, 79

Spring Clip
210202 ..... 53, 57, 61, 67

Spring Hook Tool
321P4 111

Standpipe Adapter
36878 91

Standpipe Strap
33489 ..... 89, 91

Strain Relief
32219 ..... 89, 91
38384 ..... 41, 103

Switch
33445 35
37830 35

Switch Assembly
39256 35
55882 17

Switch Mounting Plate
29676 37

T

Temperature Control
201279P 25

Temperature Switch
35115 ..... 7, 9, 11, 13, 15, 17, 19, 21, 23, 25, 27, 29
35117 27
36335 ..... 7, 9, 11, 15, 29

Terminal Block
36841 17

Terminal Extractor Tool
283P4 101

Tie Wrap Mounting Clamp
F140602 105

Timer
200604 27
200885P 7, 9, 13, 17, 19, 21, 27, 29
200927P 7, 9, 11, 29
201013P 27
37004P 27
37922P 15
37925P 27
37927P 11, 29
37928P 9, 29
37929P 9, 11
37930P 7, 9, 29
37995P 27
38881P 15, 25

Timer Knob
201501Q 7, 9, 11, 13, 15, 17, 19, 21, 25, 31, 33
201501W 7, 9, 11, 13, 15, 17, 19, 21, 25, 31, 33

Timer Knob Assembly
202133 ..... 11, 15, 31, 33

Timer Skirt Assembly
36700Q 7, 9, 11, 13, 15, 17, 19, 21, 25, 31, 33
36700W 7, 9, 11, 13, 15, 17, 19, 21, 25, 31, 33
803116 ..... 11, 15, 31, 33

Tool Kit
725P3 111

Top
37992LP 43
37992QP 43
37992WP 43

Top Assembly
201458WP 37
202481WP 43
39346WP 43

Top Cover
39905Q 7, 9, 11, 13, 15, 17, 19, 21, 25, 27, 29
39905W 7, 9, 11, 13, 15, 17, 19, 21, 23, 25, 27, 29

Top Shield
202932 41
39744 ..... 37, 41

Torx Bit
282P4 111

Transformer
201616P 23

Transmission Assembly
203768 97
38165P 95

Transmission Case Assembly
33223P 95

Transmission Cover Assembly
37471 95

N/A items do not appear in index.

© Copyright, Alliance Laundry Systems LLC – DO NOT COPY or TRANSMIT

Transmission Oil
27243P 95
Transmission Rebuild Kit
RB150004 95
Transmission Sealant
37577P 95
Tub Assembly
39240P 75, 77, 79
39252P 71, 73
Tub Cover and Gasket Assembly
38573 ..... 81, 85
Tub Cover Assembly
202461 83
202888 81
203154 83
39169 ..... 81, 85
Tub Cover Gasket
38359 ..... 81, 83, 85
Tub Cover Removal Tool
273P4 111
Tub Kit
39250P 71, 77, 79
Tube
202333 ..... 57, 61
Tubing
202700 ..... 81, 83, 85
Tub-to-Pump Hose
38351 91
38759 ..... 87, 89

V

Valve to Inlet Hose
204400 49

W

Warning Label
D500049 ..... 81, 83, 85
D500316 41
202256 81
202258 99
202260 41
39251 41
803260 99
Warning Sticker
36592 37
Washer
D504082 ..... 53, 57, 61, 63, 67, 69
202010 85
20290 ..... 45, 47, 49
21456 95
21734 17
25820 17
26509 ..... 93, 95
27015 93
28094 ..... 71, 73, 75, 77, 79
28449 ..... 17, 19, 21
29260 95
35092 95
35535 93
37772 ..... 53, 55, 59, 65
39249 ..... 81, 83, 85
52549 ..... 53, 57, 61, 63, 67, 69
802254 ..... 45, 47, 49
803615 ..... 45, 47, 49
81392 ..... 53, 57, 61, 63, 67, 69
Washtub Gasket
39122 ..... 71, 73, 75, 77, 79
Washtub Kit
719P3 ..... 75, 77, 79
Water Hose
F200116 ..... 45, 47, 49
Weldment and Bearing Assembly
39253 93
39254 93
Wire Clip
51291 107
687500 107
70366201 105
Wire Harness Assembly
38661P 115
Wire, 12 Gauge
45380 113
Wire, 18 Gauge
45001 113

N/A items do not appear in index.

© Copyright, Alliance Laundry Systems LLC – DO NOT COPY or TRANSMIT

Notes

© Copyright, Alliance Laundry Systems LLC – DO NOT COPY or TRANSMIT