Service Manual for Commercial Stacked Dryers

("EE", "EG", "ZE" and "ZG" Series Dryers — Metered and Nonmetered Models)

See Page 2 for Model Numbers

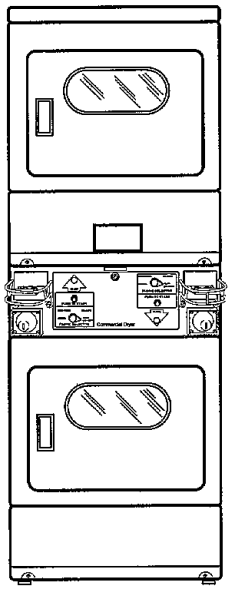

D193S

Part No. 502013
3/94

⚠ WARNING

Failure to install, maintain, and/or operate this machine according to the manufacturer's instructions may result in conditions which can produce serious injury, death and/or property damage.

Do not repair or replace any part of the product or attempt any servicing unless specifically recommended or published in the Parts and Service Manual that you understand and have the skills to carry out.

Whenever ground wires are removed during servicing, these ground wires must be reconnected to ensure that the product is properly grounded and to reduce the risk of fire, electric shock, serious injury, or death.

W006

⚠ WARNING

Repairs that are made to your products by unqualified persons can result in hazards due to improper assembly or adjustments subjecting you, or the inexperienced person making such repairs, to the risk of serious injury, electrical shock, or death.

W007

⚠ CAUTION

If you or an unqualified person perform service on your product, you must assume the responsibility for any personal injury or property damage which may result. The manufacturer will not be responsible for any injury or property damage arising from improper service and/or service procedures.

W008

NOTE: The WARNINGS and IMPORTANT INSTRUCTIONS appearing in this manual are not meant to cover all possible conditions and situations that may occur. It must be understood that common sense, caution and carefulness are factors which CANNOT be built into these products. These factors MUST BE supplied by the person(s) installing, maintaining or operating the product.

Always contact your dealer, distributor, service agent or the manufacturer about any problems or conditions you do not understand.

Recognize Safety Symbols, Words and Labels

⚠DANGER — Immediate hazards which WILL result in serious injury or death.

⚠WARNING — Hazards or unsafe practices which COULD result in serious injury or death.

⚠CAUTION — Hazards or unsafe practices which COULD result in minor or moderate injury or product or property damage.

W009

Nameplate location

IMPORTANT
When writing for information on any dryer, be sure to mention model and serial numbers. The model and serial numbers will be found on the nameplate in one of the four corners of the door well. The door well is the shaded area shown.

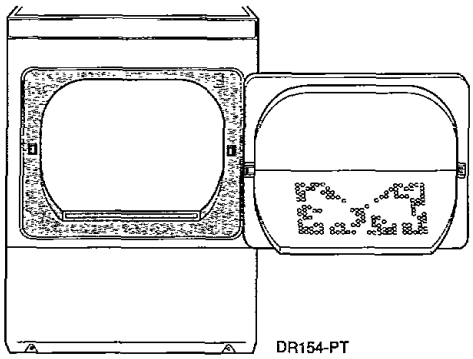

Model Identification

The information in this manual is applicable to these dryer models.

Model Numbers	Nonmetered Models	Metered Models	Counter Models	Electric Heat	Gas Heat
EE5007-1500	X			X	
EE5107-1500		X		X	
EE5107-5412		X		X	
EE5117-1500		X		X	
EE5117-3000		X		X	
EE5117-5412		X		X	
EE5507-1500		X	X	X	
EG5119-3000		X			X
EG5119-3013		X			X
EG5119-5412		X			X
ZE5117-2802		X		X	
ZE5117-2902		X		X	
ZE5117-2902		X		X	
ZE5117-3000		X		X	
ZG5119-1102		X			X
ZG5119-3013		X			X

Table of Contents

SECTION I
Grounding

⚠WARNING

To reduce the risk of electrical shock, fire, explosion, serious injury or death:
- **Disconnect electric power to the dryer before servicing.**
- **Close gas shut-off valve to gas dryer before servicing.**
- **Never start the dryer with any guards/panels removed.**
- **Whenever ground wires are removed during servicing, these ground wires must be reconnected to ensure that the dryer is properly grounded.**

W001

1. MOTOR MOUNTING BRACKET TO MOTOR (Gas and Electric Models — *Figure 1*).

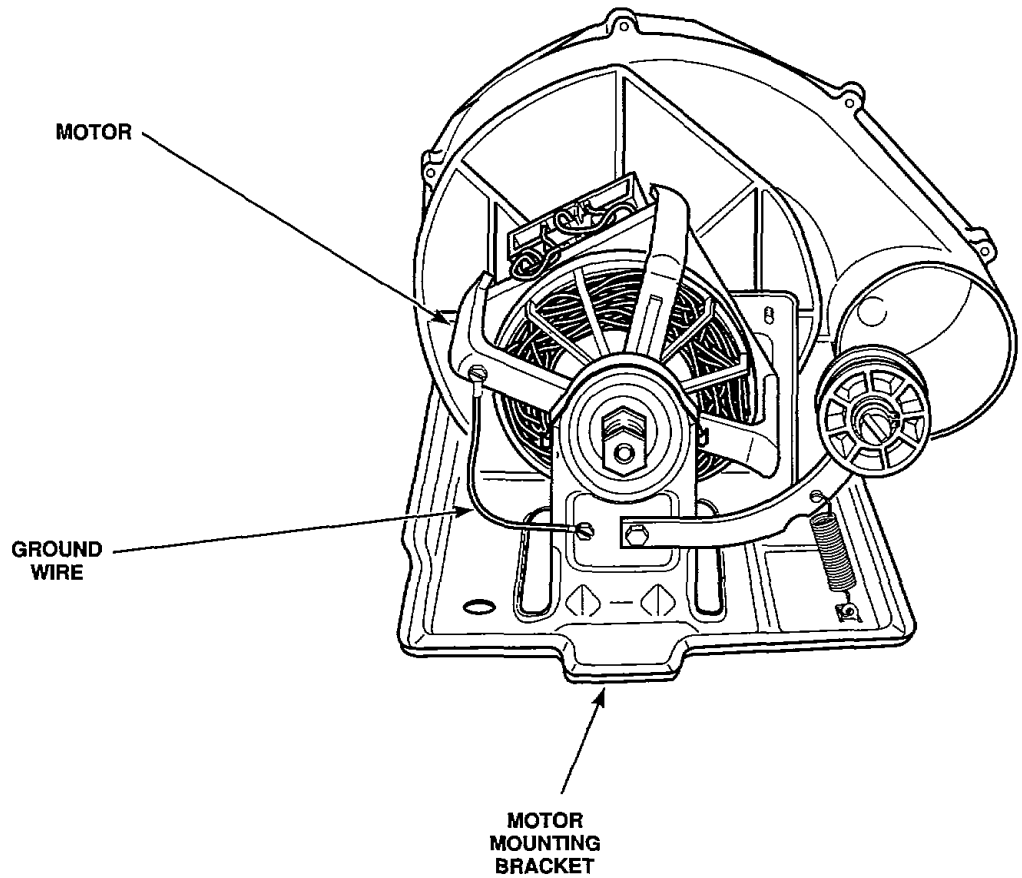

Figure 1

⚠WARNING

To reduce the risk of electrical shock, fire, explosion, serious injury or death:

- **Disconnect electric power to the dryer before servicing.**
- **Close gas shut-off valve to gas dryer before servicing.**
- **Never start the dryer with any guards/panels removed.**
- **Whenever ground wires are removed during servicing, these ground wires must be reconnected to ensure that the dryer is properly grounded.**

W001

2. NEUTRAL AT TERMINAL BLOCK TO REAR BULKHEAD (Electric Models Only — *Figure 2*).

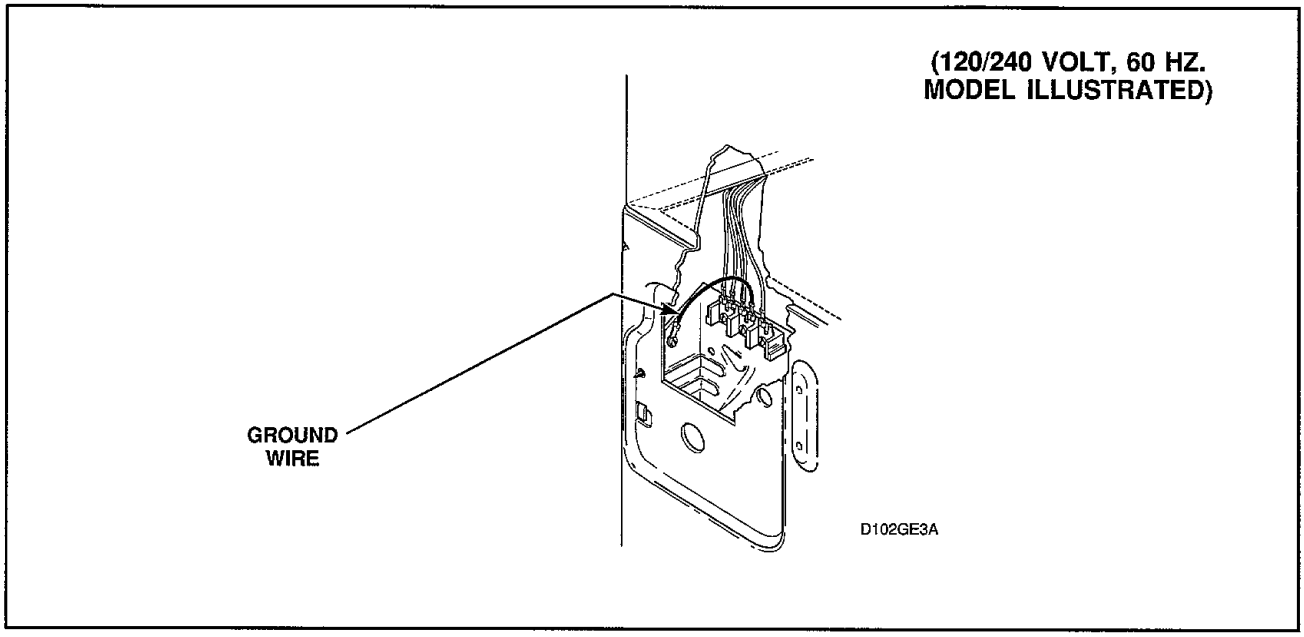

Figure 2

3. POWER CORD TO REAR BULKHEAD. WALL RECEPTACLE POLARITY CHECK (Gas Models Only — *Figure 3*).

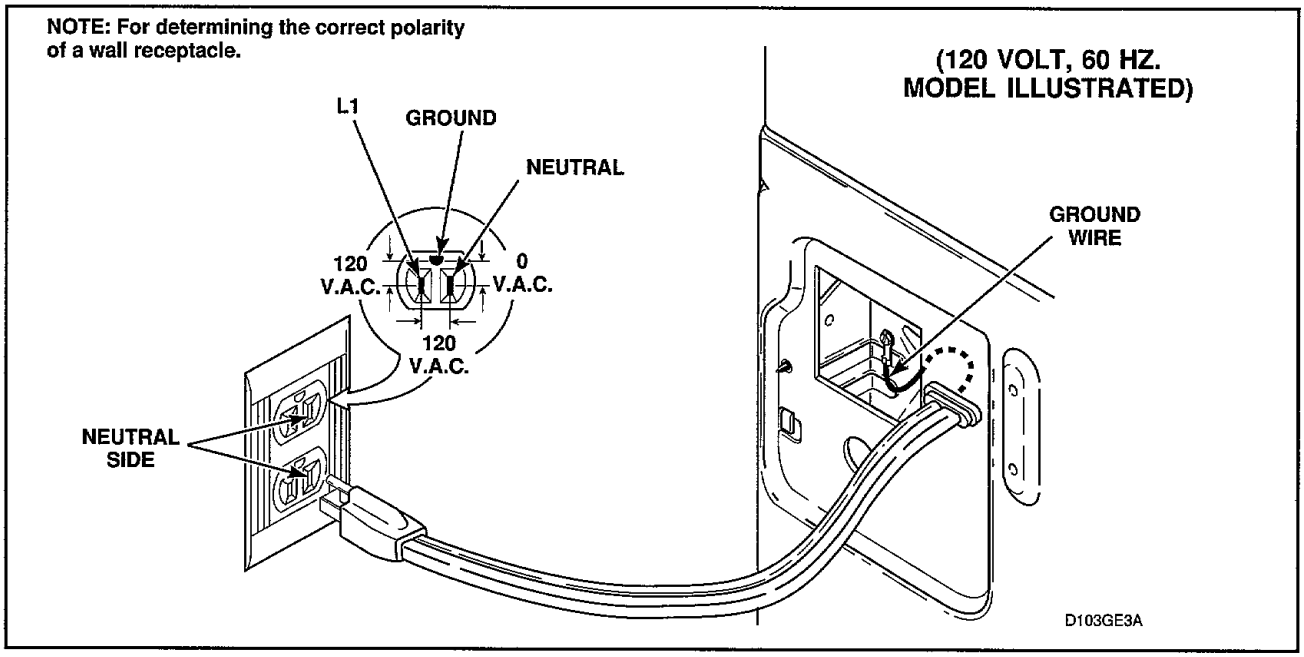

Figure 3

⚠WARNING

To reduce the risk of electrical shock, fire, explosion, serious injury or death:

- **Disconnect electric power to the dryer before servicing.**
- **Close gas shut-off valve to gas dryer before servicing.**
- **Never start the dryer with any guards/panels removed.**
- **Whenever ground wires are removed during servicing, these ground wires must be reconnected to ensure that the dryer is properly grounded.**

W001

4. METERED AND NONMETERED MODELS — FROM REAR BULKHEAD TO ACCUMULATOR BRACKET OR TIMER (Depending on model).

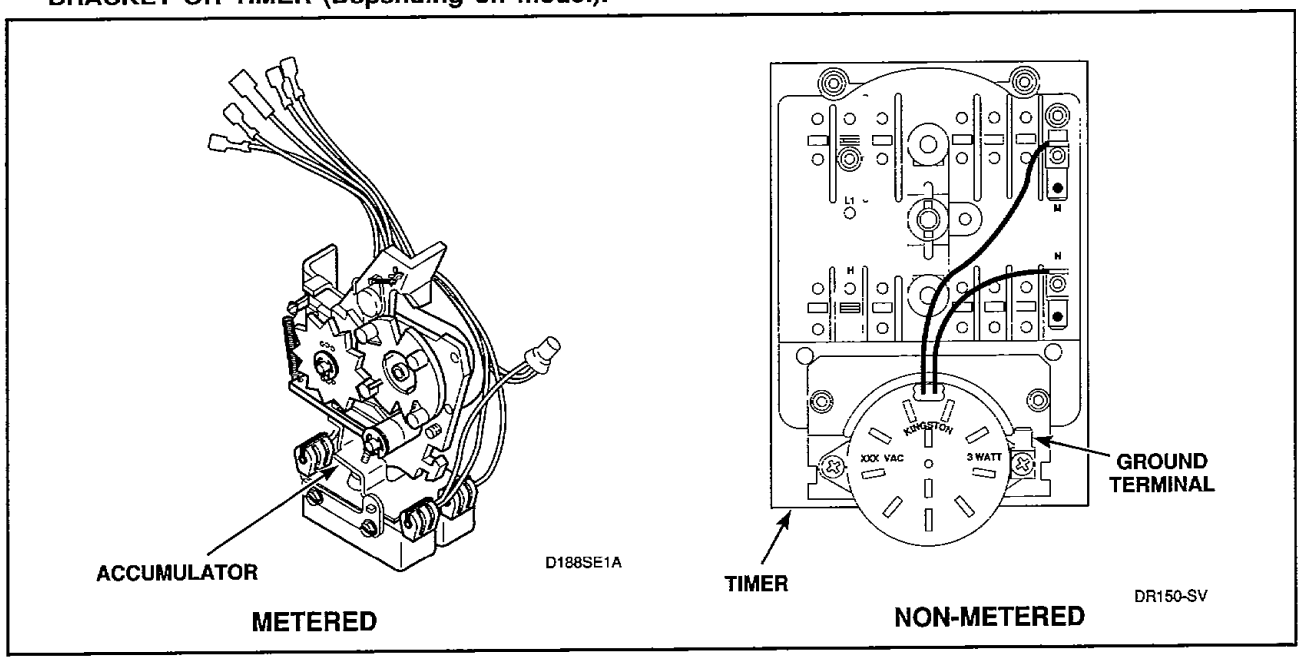

Figure 4

5. METERED AND NONMETERED MODELS — FROM CONTROL CABINET TO CONTROL PANEL.

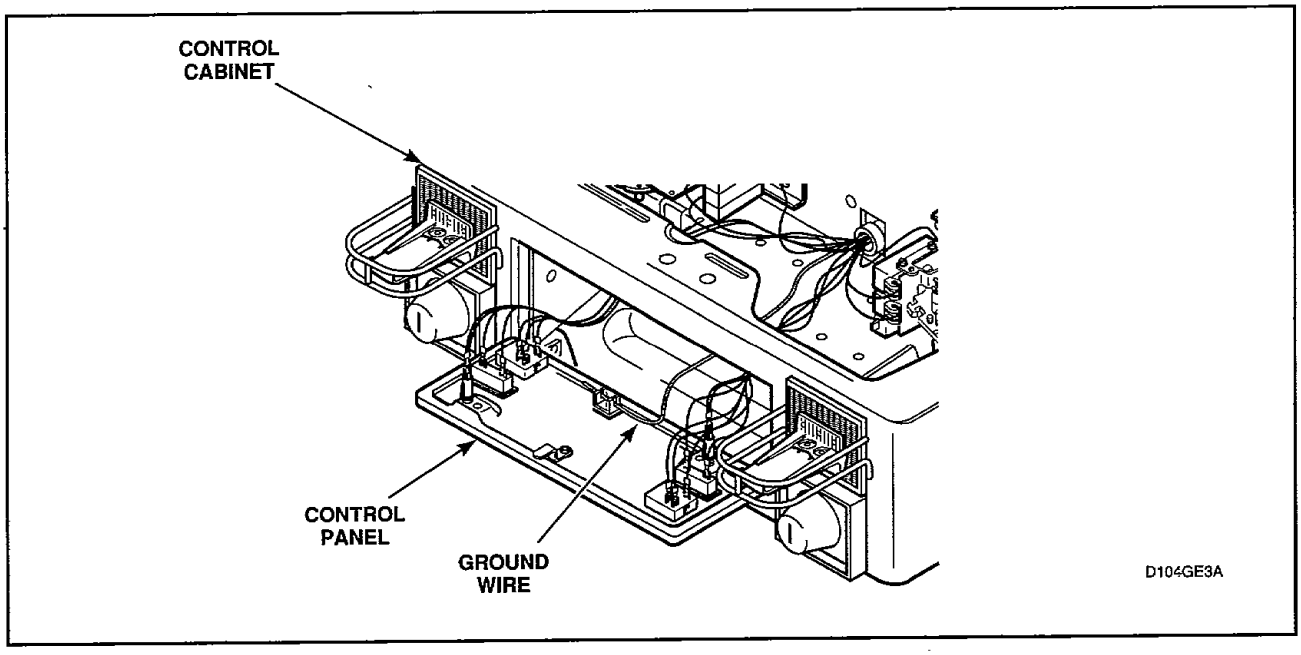

Figure 5

SECTION II
Service Procedures

⚠WARNING

To reduce the risk of electrical shock, fire, explosion, serious injury or death:
- **Disconnect electric power to the dryer before servicing.**
- **Close gas shut-off valve to gas dryer before servicing.**
- **Never start the dryer with any guards/panels removed.**
- **Whenever ground wires are removed during servicing, these ground wires must be reconnected to ensure that the dryer is properly grounded.**

W001

IMPORTANT: When reference to direction (right or left) is made in this manual, it is from the operator's position facing the front of the dryer.

⚠WARNING

Do not repair or replace any part of the dryer or attempt any servicing unless specifically recommended in the User-Maintenance Instructions or in published user-repair instructions that you understand and have the skills to carry out.

⚠WARNING

To reduce the risk of electrical shock, fire, explosion, serious injury or death:

- **Disconnect electric power to the dryer before servicing.**
- **Close gas shut-off valve to gas dryer before servicing.**
- **Never start the dryer with any guards/panels removed.**
- **Whenever ground wires are removed during servicing, these ground wires must be reconnected to ensure that the dryer is properly grounded.**

WC01

6. **CONTROL PANEL, TEMPERATURE SWITCH, PUSH-TO-START SWITCH AND INDICATOR LIGHT (Figure 6)**

   a. Unlock control panel, *Figure 6, Step 1.*
   b. Pull top of control panel away from control cabinet far enough to allow lifting the control panel up and off the rail support of the control cabinet, *Figure 6, Step 2.* Remove control panel away from control cabinet, *Figure 6, Step 3*
   c. Disconnect all wires to TEMPERATURE SWITCH, PUSH-TO-START switch and INDICATOR LIGHT and remove ground clip and screw holding ground wire to control cabinet and control panel.

   NOTE: Refer to appropriate wiring diagram when reconnecting wires.

   d. Loosen setscrew holding temperature switch knob to shaft and pull knob off shaft, *Figure 7 or 8.*
   e. Remove knurled nut holding temperature switch to panel and remove switch, *Figure 7 or 8.*
   f. Remove hex nut from PUSH-TO-START switch and remove switch, *Figure 7 or 8.*
   g. Squeeze locking tabs on INDICATOR LIGHT and pull light out from back of panel, *Figure 7 or 8.*

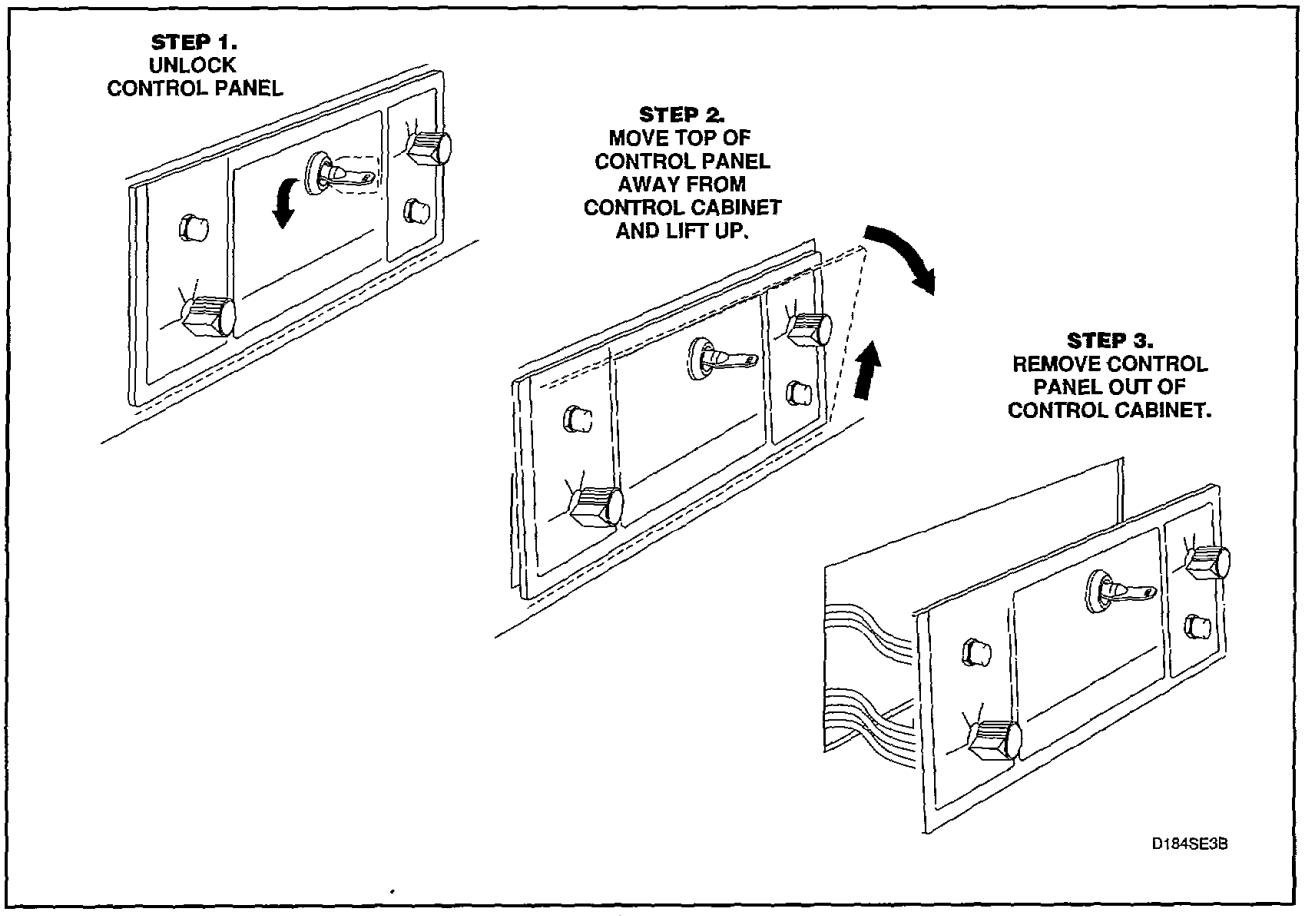

Figure 6

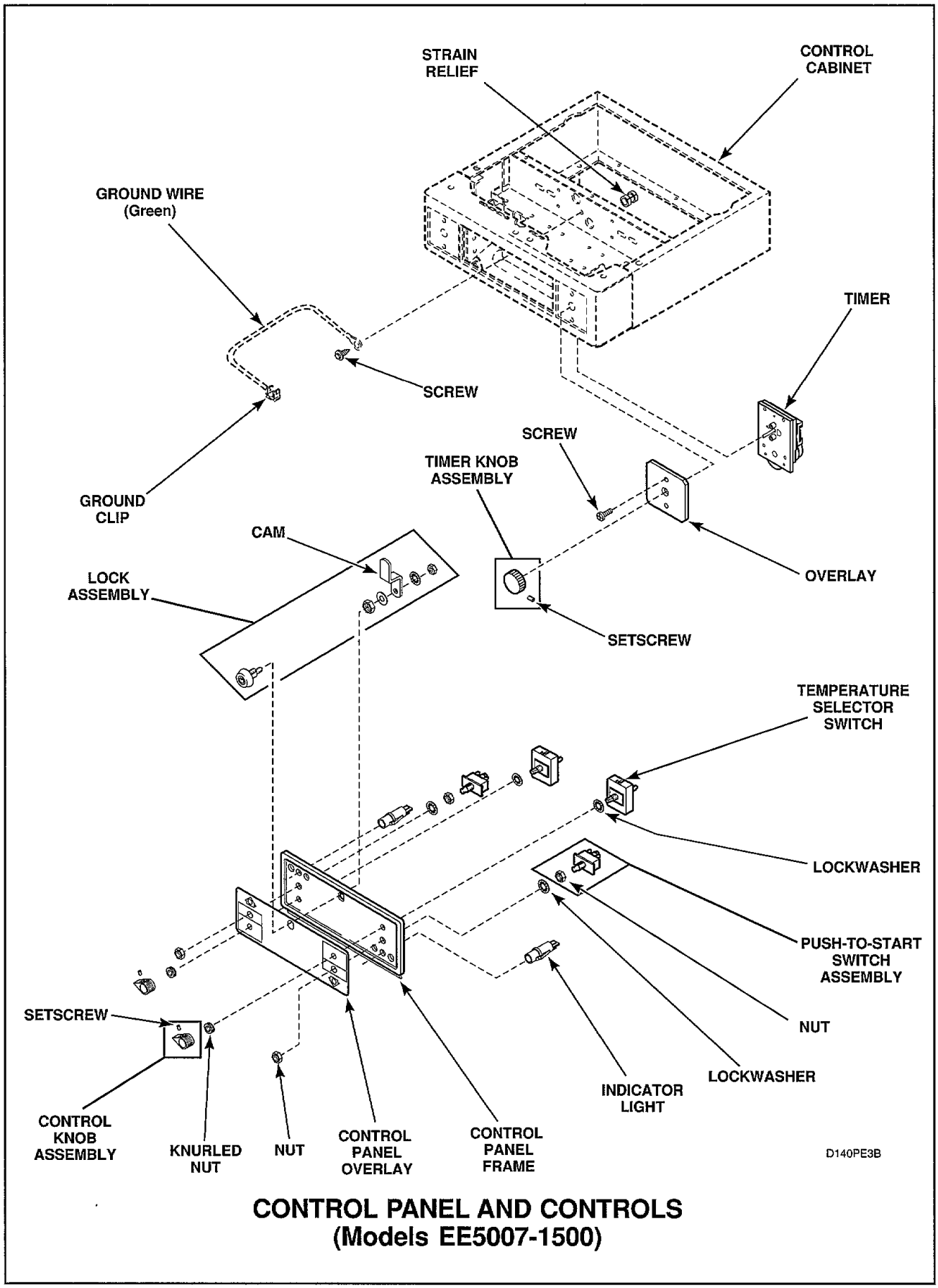

CONTROL PANEL AND CONTROLS
(Models EE5007-1500)

Figure 7

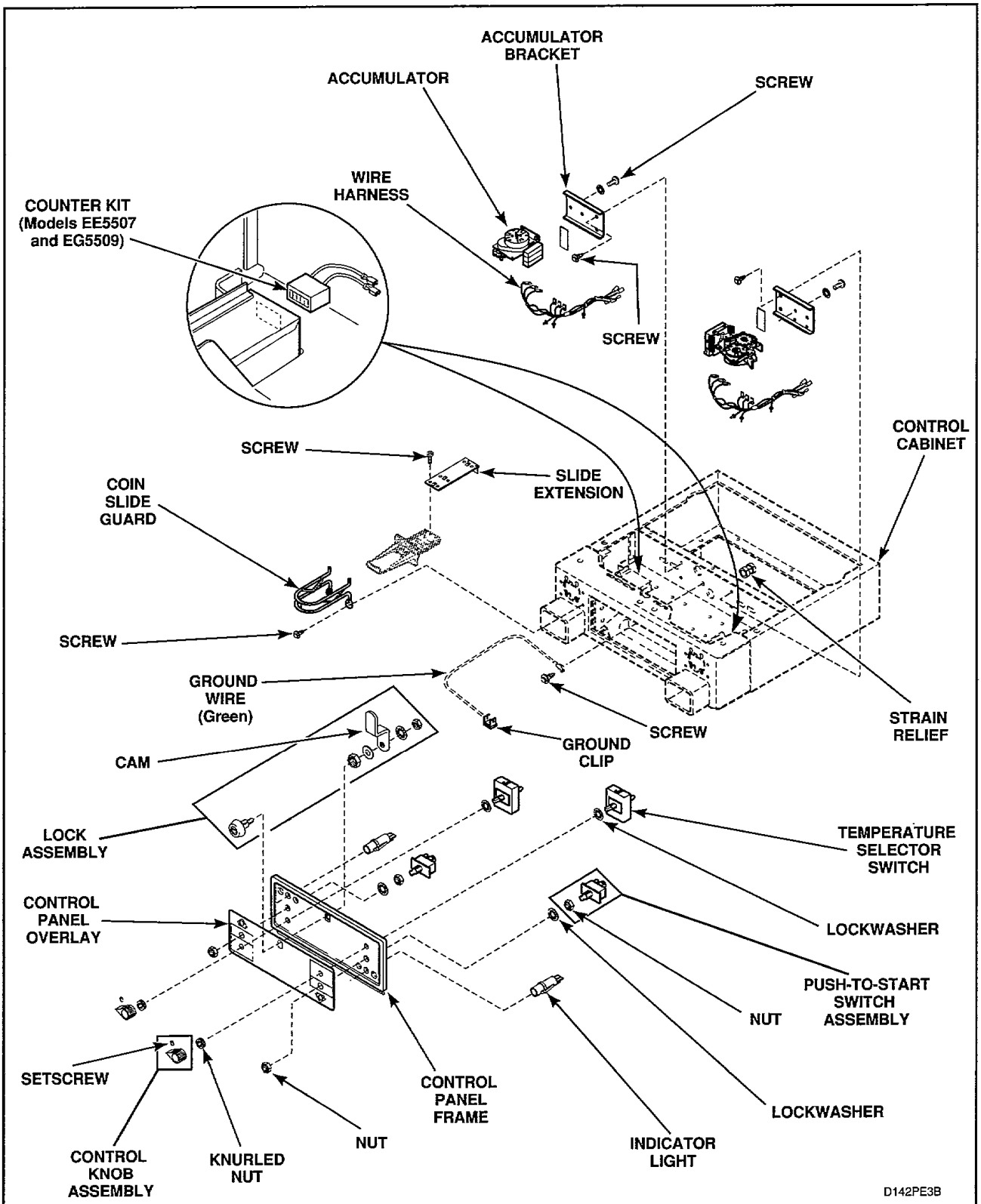

CONTROL PANEL AND CONTROLS
(All Models Except EE5007-1500)

Figure 8

502013

⚠WARNING

To reduce the risk of electrical shock, fire, explosion, serious injury or death:
- **Disconnect electric power to the dryer before servicing.**
- **Close gas shut-off valve to gas dryer before servicing.**
- **Never start the dryer with any guards/panels removed.**
- **Whenever ground wires are removed during servicing, these ground wires must be reconnected to ensure that the dryer is properly grounded.**

W001

7. **CONTROL CABINET FRONT**
   a. Unlock control panel, *Figure 6, Step 1.*
   b. Pull top of control panel away from control cabinet far enough to allow lifting the control panel up and off the rail support on front of control cabinet, *Figure 6, Step 2.* Remove control panel away from control cabinet, *Figure 6, Step 3.*
   c. Disconnect all wires from the control panel components; then remove ground clip and screw holding ground wire to control cabinet and control panel, *Figure 5.*

NOTE: Refer to appropriate wiring diagram when reconnecting wires.

   d. While supporting the lower access panel, remove the lower front access panel from both the upper and lower dryers by removing the two screws from the bottom edge of each access panel, *Figure 9.*
   e. Gently lower each access panel to disengage guide lugs from bottom edge of front panel.
   f. **LOWER DRYER —** Remove two screws holding bottom tabs on front panel to dryer cabinet, *Figure 10.* Swing bottom of front panel away from dryer to disengage hold-down clips and guide lugs from control cabinet.

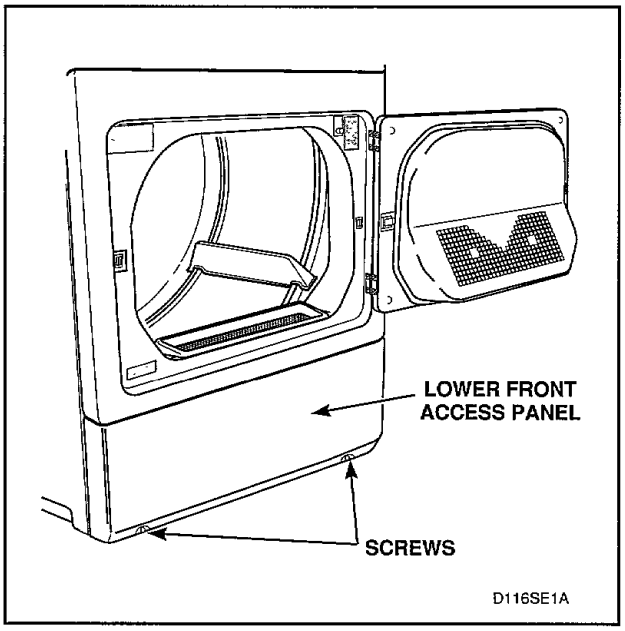

Figure 9

   g. Disconnect wires from door switch, *Figure 11.*

NOTE: Refer to appropriate wiring diagram when rewiring switch.

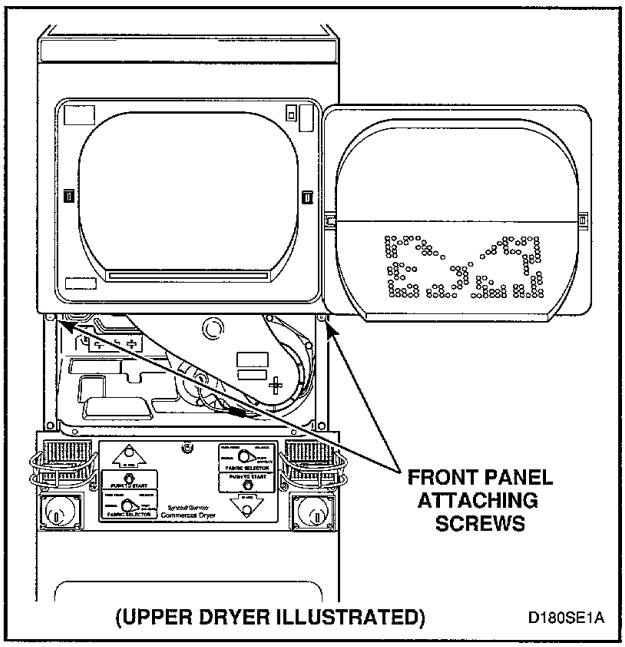

Figure 10

   h. **LOWER DRYER —** Remove two screws holding bottom tabs on control cabinet to front flange of dryer cabinet, *Figure 12 or 13.*
   i. **UPPER DRYER —** Remove two screws and shoulder washers holding the upper dryer base to the top side of the control cabinet front, *Figure 12 or 13.*

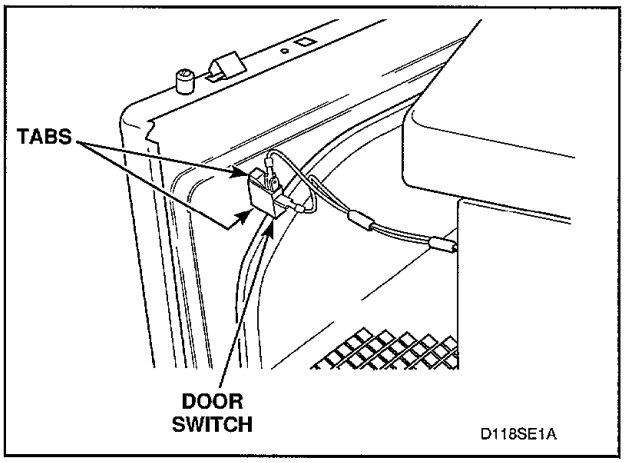

Figure 11

⚠WARNING

To reduce the risk of electrical shock, fire, explosion, serious injury or death:

- **Disconnect electric power to the dryer before servicing.**
- **Close gas shut-off valve to gas dryer before servicing.**
- **Never start the dryer with any guards/panels removed.**
- **Whenever ground wires are removed during servicing, these ground wires must be reconnected to ensure that the dryer is properly grounded.**

W001

j. Reach in through front opening of control cabinet and remove two screws (per side) holding the control cabinet front to the front flange of the control cabinet wrapper, *Figure 12 or 13.*

k. **METERED MODELS —** Unlock and remove two coin drawers. Reach in through coin drawer opening and remove one screw (per side) holding control cabinet from to control cabinet wrapper, *Figure 13.*

l. Reach through control panel opening and remove two screws holding the control cabinet wrapper tabs to the control cabinet front tabs, *Figure 13.*

m. Carefully pull control cabinet front straight out from between the upper and lower dryers, *Figure 13.*

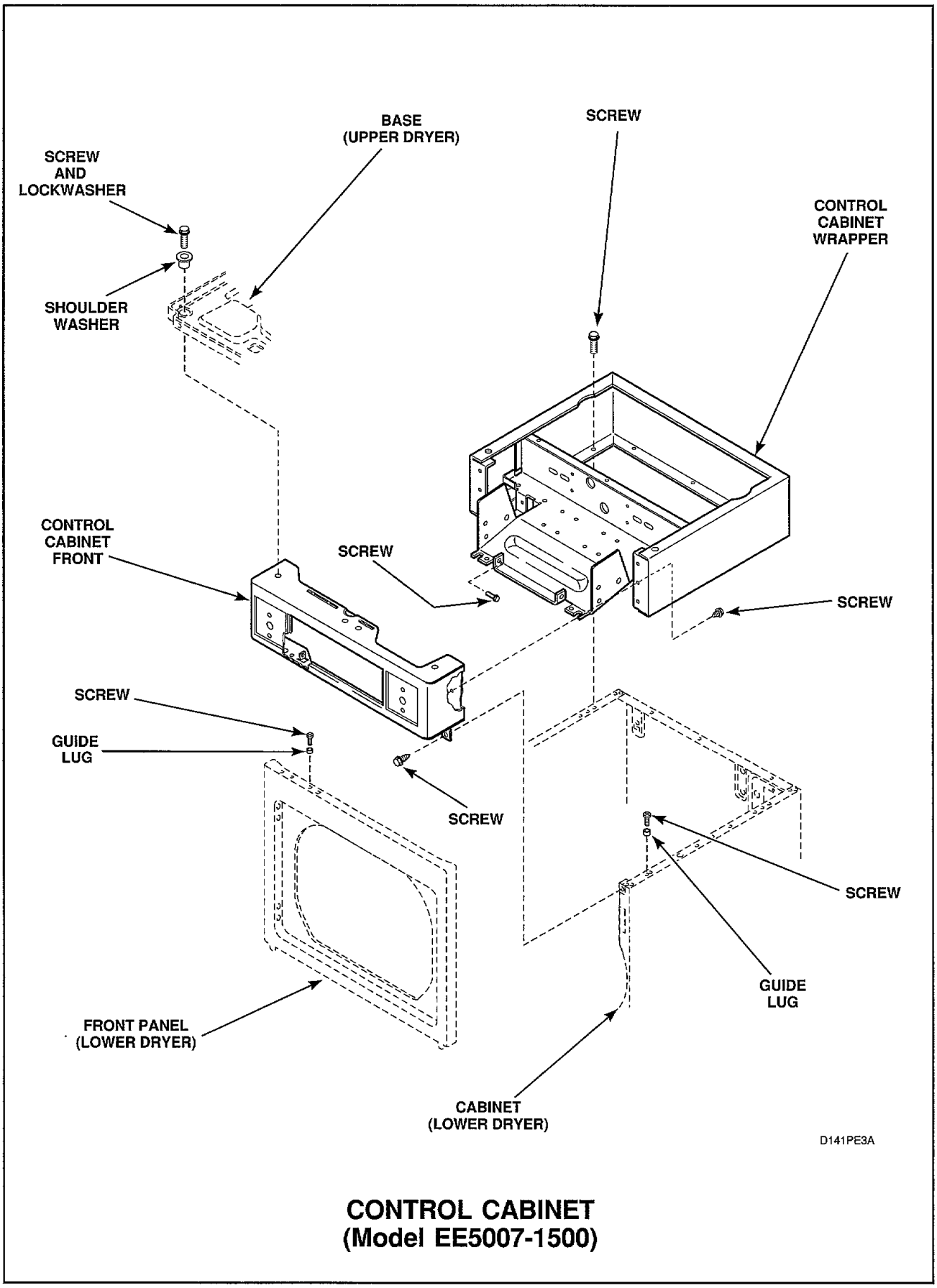

CONTROL CABINET
(Model EE5007-1500)

Figure 12

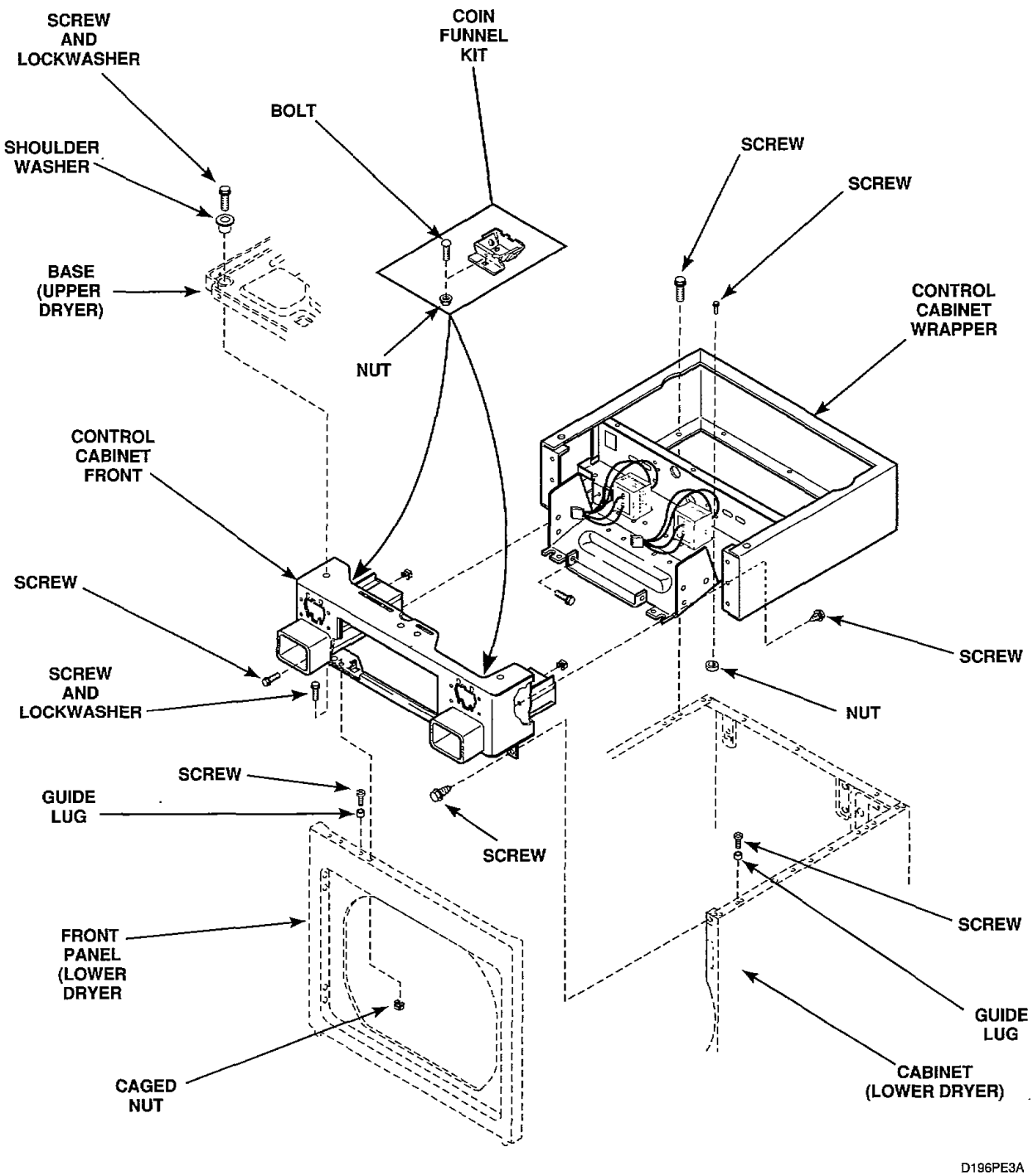

CONTROL CABINET
(All Models Except EE5007-1500)

Figure 13

⚠WARNING

To reduce the risk of electrical shock, fire, explosion, serious injury or death:
- **Disconnect electric power to the dryer before servicing.**
- **Close gas shut-off valve to gas dryer before servicing.**
- **Never start the dryer with any guards/panels removed.**
- **Whenever ground wires are removed during servicing, these ground wires must be reconnected to ensure that the dryer is properly grounded.**

W001

8. CONTROL PANEL OVERLAY

a. Unlock control panel, *Figure 6.*
b. Pull top of control panel away from control cabinet far enough to allow lifting the control panel up and off the rail support of the control cabinet, *Figure 6, Step 2.* Remove control panel away from control cabinet, *Figure 6, Step 3.*
c. Disconnect all wires to TEMPERATURE SWITCH, PUSH-TO-START switch and INDICATOR LIGHT and remove ground clip and screw holding ground wire to control cabinet and control panel.

NOTE: Refer to appropriate wiring diagram when reconnecting wires.

d. Loosen setscrew holding temperature switch knob to shaft and pull knob off shaft, *Figure 7 or 8.*
e. Remove knurled nut holding temperature switch to panel and remove switch, *Figure 7 or 8.*
f. Remove hexnut from PUSH-TO-START switch and remove switch, *Figure 7 or 8.*
g. Squeeze locking tabs in on INDICATOR LIGHT and pull light out back of panel, *Figure 7 or 8.*
h. Remove locknut and lockwasher holding cam on lock assembly, *Figure 7 or 8.*
i. Remove large locknut holding lock assembly in control panel frame; then remove lock assembly out through front of control panel frame, *Figure 7 or 8.*

NOTE: The control panel overlay has an adhesive backing. Remove it by carefully peeling it from the control panel frame.

INSTALLING NEW CONTROL PANEL OVERLAY

NOTE: Before removing the protective backing from the new control panel overlay, check the fit of theoverlay to the dryer control panel frame. The temperature switch hole, lock assembly hole and push-to-start switch holes are the locating guides.

a. Once the overlay is fitted to the control panel frame, carefully peel the protective backing from either end of the overlay and firmly press in place.
b. Remove the rest of the protective backing from the overlay and firmly press the overlay into place.
c. Reassembly components on the control panel and reinstall in control cabinet.

9. TIMER (Nonmetered Models)

a. Unlock control panel, *Figure 6, Step 1.*
b. Pull top of control panel away from control cabinet far enough to allow lifting the control panel up and off the rail support of the control cabinet, *Figure 6, Step 2.* Remove control panel away from control cabinet, *Figure 6, Step 3.*
c. Disconnect all wires to TEMPERATURE SWITCH, PUSH-TO-START switch and INDICATOR LIGHT and remove ground clip and screw holding ground wire to control cabinet and control panel.

NOTE: Refer to appropriate wiring diagram when reconnecting wires.

d. Loosen setscrew in appropriate timer knob and remove knob from timer shaft, *Figure 7.*
e. Reach in through control panel opening; support the appropraite timer and remove screws holding timer to control cabinet, *Figure 7.*
f. Pull timer out through control panel opening as far as wires will permit.
g. Disconnect wires from timer.

NOTE: Refer to appropriate wiring diagram when rewiring the timer.

h. Remove ground wire from ground terminal on timer, *Figure 4.*

10. ACCUMULATOR (Metered Models)

a. Unlock control panel, *Figure 6, Step 1.*
b. Pull top of control panel away from control cabinet far enough to allow lifting the control panel up and off the rail support of the control cabinet, *Figure 6 , Step 2.* Remove control panel away from control cabinet, *Figure 6, Step 3.*
c. Disconnect all wires to TEMPERATURE SWITCH, PUSH-TO-START switch and INDICATOR LIGHT and remove ground clip and screw holding ground wire to control cabinet and control panel.

NOTE: Refer to appropriate wiring diagram when reconnecting wires.

⚠WARNING

To reduce the risk of electrical shock, fire, explosion, serious injury or death:
- **Disconnect electric power to the dryer before servicing.**
- **Close gas shut-off valve to gas dryer before servicing.**
- **Never start the dryer with any guards/panels removed.**
- **Whenever ground wires are removed during servicing, these ground wires must be reconnected to ensure that the dryer is properly grounded.**

W001

d. Reach in through control panel opening and remove screws holding accumulator and mounting bracket to the control cabinet, *Figure 14.*
e. Disconnect wires from accumulator at the connectors.

NOTE: Refer to appropriate wiring diagram when rewiring the timer.

f. Remove two screws holding accumulator to mounting bracket, *Figure 8.*
g. Counter (if present), *Figure 8.*
   (1) Disconnect wire from terminal on accumulator switch "c".
   (2) Cut the other wire at the butt splice connector.

NOTE: Butt splice connector will need to be replaced during reinstallation.

   (3) Cut harness strap holding wires to bracket.

NOTE: Harness strap must be replaced during reinstallation.

   (4) The counter(s) are mounted inside the control cabinet, *Figure 8,* with two-sided tape.

NOTE: When installing a new counter, remove the protective backing from the tape located on underside of new counter. Firmly press the new counter in place. Tape on counter will reach full adhesion in approximately 24 hours.

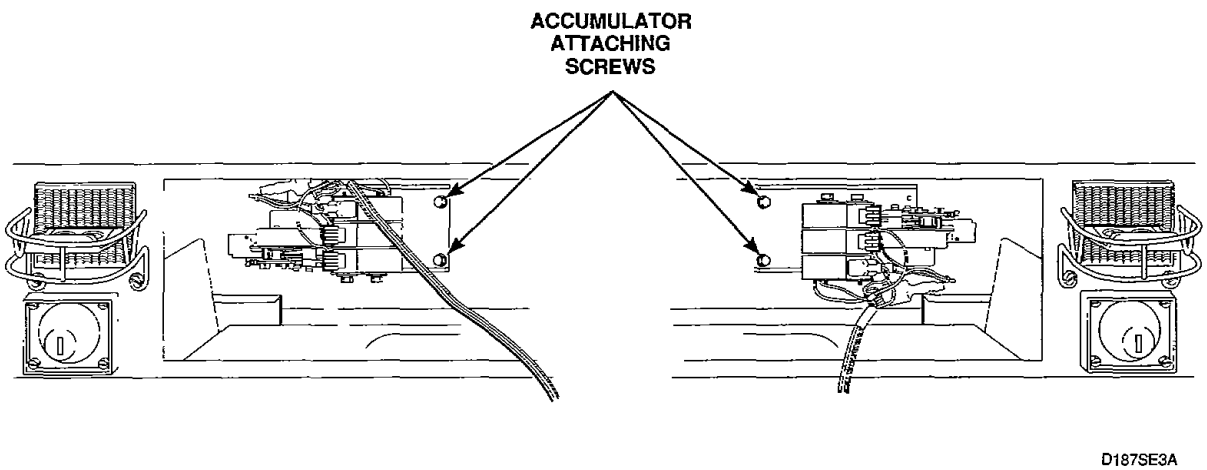

Figure 14

⚠WARNING

To reduce the risk of electrical shock, fire, explosion, serious injury or death:

- **Disconnect electric power to the dryer before servicing.**
- **Close gas shut-off valve to gas dryer before servicing.**
- **Never start the dryer with any guards/panels removed.**
- **Whenever ground wires are removed during servicing, these ground wires must be reconnected to ensure that the dryer is properly grounded.**

W001

11. CABINET TOP (Upper Dryer)

a. While supporting the lower access panel, remove two screws from bottom edge of lower front access panel, *Figure 9.*
b. Gently lower the access panel to disengage guide lugs from bottom edge of front panel.
c. Remove two screws holding bottom tabs on front panel to dryer cabinet, *Figure 10.* Swing bottom of front panel away from dryer to disengage hold-down clips and guide lugs from cabinet top.
d. Disconnect wires from door switch, *Figure 11.*

NOTE: Refer to appropriate wiring diagram when rewiring switch.

e. Remove two screws holding cabinet top hold-down brackets to front flange of cabinet, *Figure 15.*

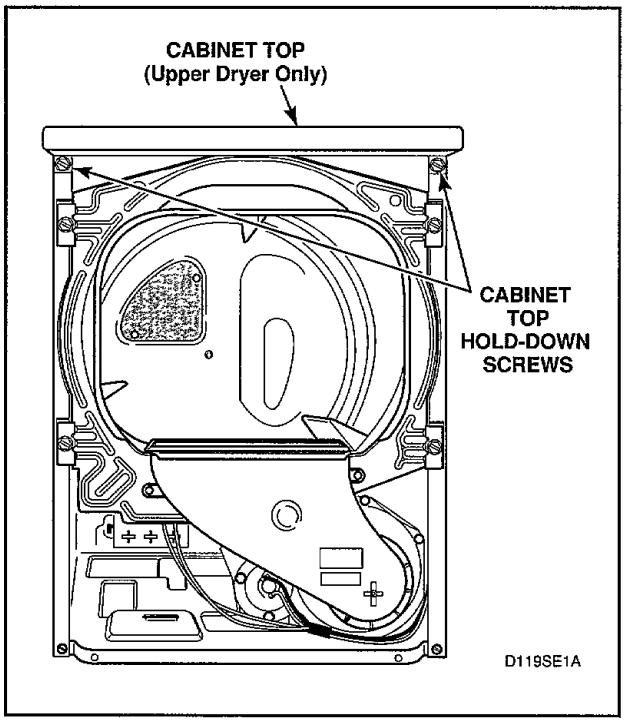

Figure 15

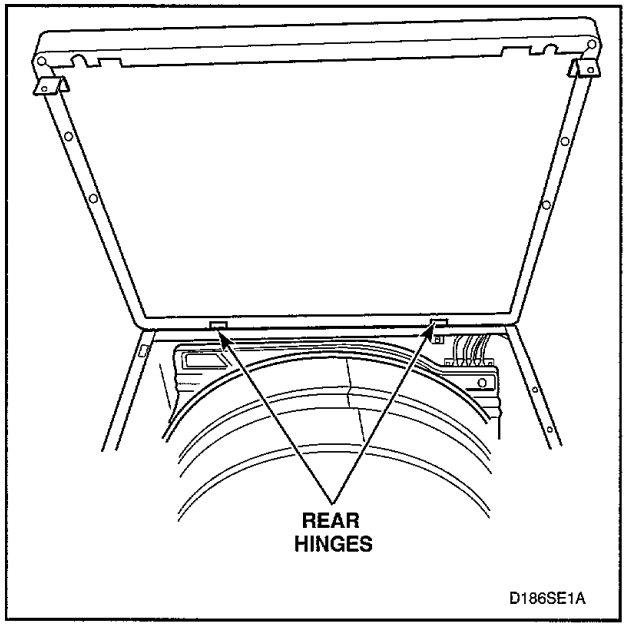

Figure 16

f. Lift cabinet top to a vertical position by hinging it on the rear hinges, *Figure 16.*

NOTE: While servicing, cabinet top may be raised and hinged on the rear hinges or supported against wall behind dryer.

⚠WARNING

To reduce the risk of electrical shock, fire, explosion, serious injury or death:

- **Disconnect electric power to the dryer before servicing.**
- **Close gas shut-off valve to gas dryer before servicing.**
- **Never start the dryer with any guards/panels removed.**
- **Whenever ground wires are removed during servicing, these ground wires must be reconnected to ensure that the dryer is properly grounded.**

W001

12. LINT FILTER *(Figure 17)*

a. Open loading door and remove screw from each end of lint filter.
b. Lift lint filter out of front bulkhead.

IMPORTANT: Make sure to replace the filter with the wording on the filter facing the front of the dryer.

13. LOADING DOOR AND HINGES

a. Open loading door, *Figure 17.*
b. Support loading door and remove screws holding loading door and hinges to front panel, *Figure 17.*

DOOR HINGE

Remove four screws holding hinge to loading door, *Figure 21.*

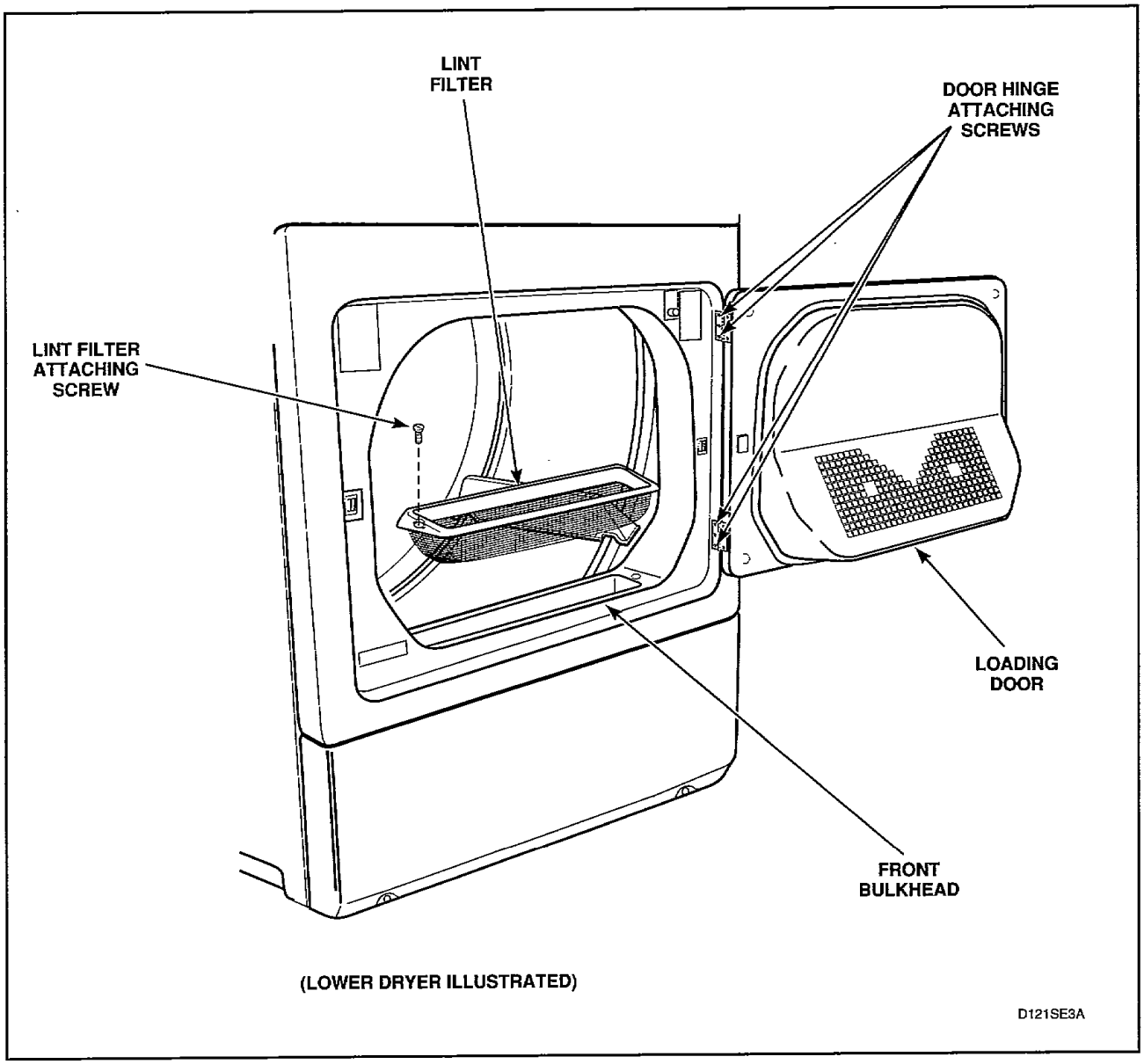

Figure 17

⚠WARNING

To reduce the risk of electrical shock, fire, explosion, serious injury or death:
- **Disconnect electric power to the dryer before servicing.**
- **Close gas shut-off valve to gas dryer before servicing.**
- **Never start the dryer with any guards/panels removed.**
- **Whenever ground wires are removed during servicing, these ground wires must be reconnected to ensure that the dryer is properly grounded.**

W001

Reversing Door Procedure (Optional)

NOTE: Dryer doors equipped with a window are not reversible.

The door on your dryer is completely reversible. It can be hinged on either side for your convenience. The door consists of 16 screws; 11 around the door perimeter, four on the front panel and one in the recessed door pull. All screws are interchangeable except for the one in the recessed door pull.

The dryer is shipped from the factory with the door hinged on the right side (viewed from front of dryer). To hinge the door on the left side, proceed as follows:

a. Support door and remove four screws holding hinges to front panel, *Figure 18*. Remove complete door assembly.

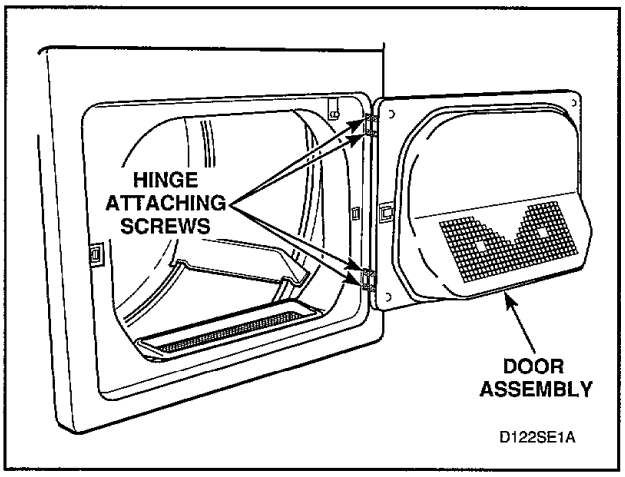

Figure 18

b. Remove screw from door pull, *Figure 19,* and the remaining screws around the door perimeter. Set hinges aside at this time.

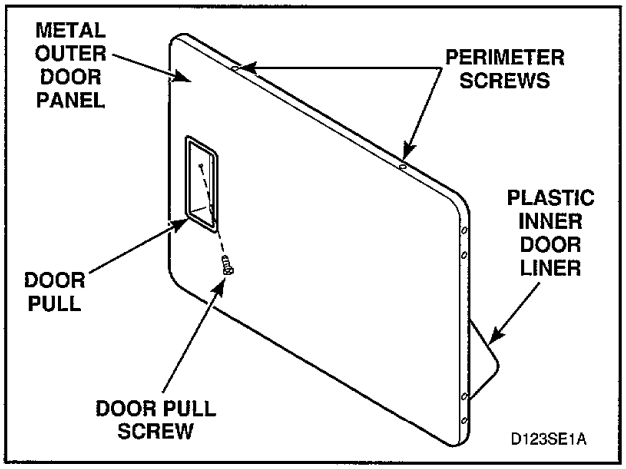

Figure 19

c. Remove plastic inner door liner (with the door strike attached) from the metal door panel.
d. Rotate the metal outer door panel 180 degrees.
e. Remove door strike from door liner, *Figure 20,* and reinstall strike on opposite side.

NOTE: Door strike must be located on the same side of door as the door pull. Once the door strike is in place, position the inner door liner into the outer door panel.

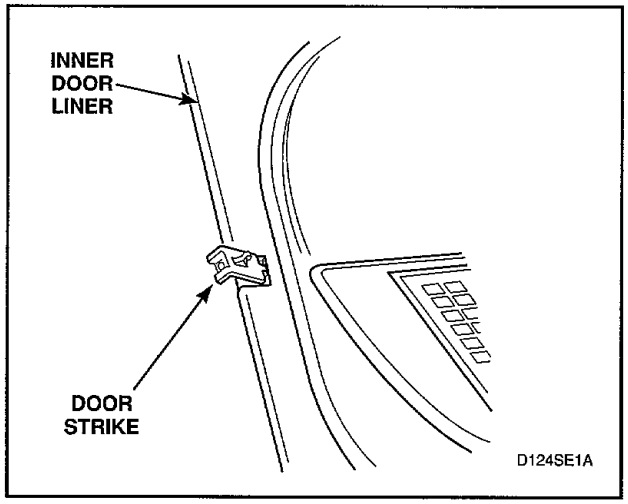

Figure 20

(continued)

⚠WARNING

To reduce the risk of electrical shock, fire, explosion, serious injury or death:
- **Disconnect electric power to the dryer before servicing.**
- **Close gas shut-off valve to gas dryer before servicing.**
- **Never start the dryer with any guards/panels removed.**
- **Whenever ground wires are removed during servicing, these ground wires must be reconnected to ensure that the dryer is properly grounded.**

W001

f. Reinstall the two hinges on the side of door opposite of door pull and door strike.

NOTE: Screw the hinges onto door with the hinge pin facing the front of the door, *Figure 21.*

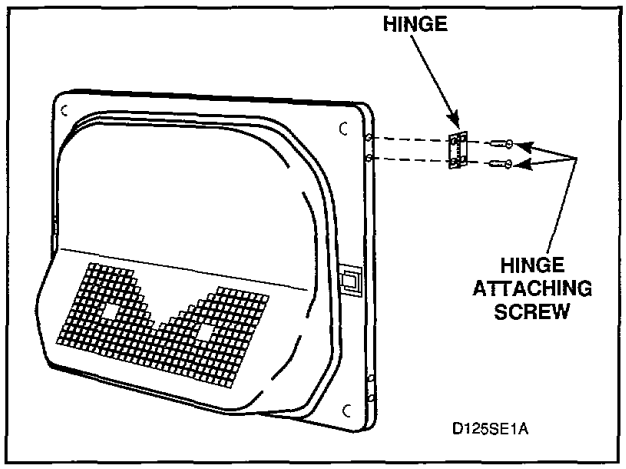

Figure 21

g. Reinstall door pull screw and the remaining screws around the door perimeter.
h. Remove plastic plugs (or screws) from left side of the door opening of the dryer front panel and place them into holes on right side, *Figure 22.*

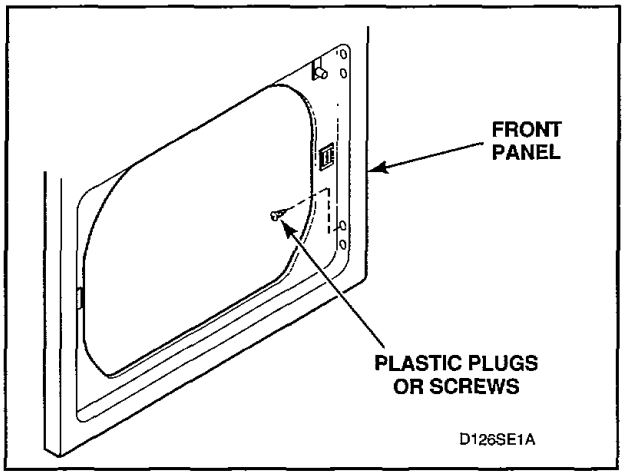

Figure 22

i. While supporting door assembly, secure hinges to front panel using the four remaining screws, *Figure 23.* Tighten all screws firmly.

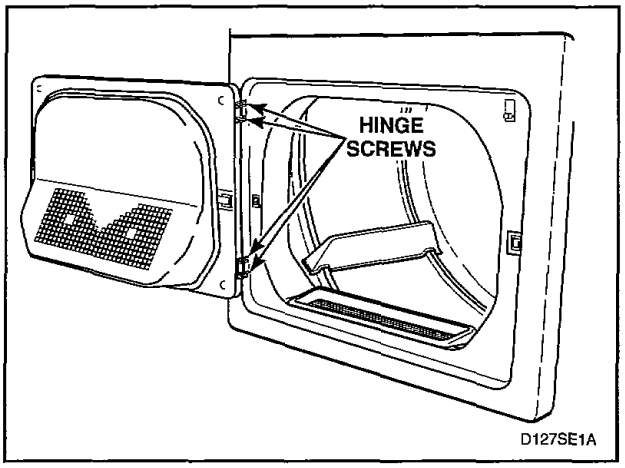

Figure 23

⚠WARNING

To reduce the risk of electrical shock, fire, explosion, serious injury or death:

- **Disconnect electric power to the dryer before servicing.**
- **Close gas shut-off valve to gas dryer before servicing.**
- **Never start the dryer with any guards/panels removed.**
- **Whenever ground wires are removed during servicing, these ground wires must be reconnected to ensure that the dryer is properly grounded.**

W001

14. INNER AND OUTER DOOR PANELS AND DOOR PULL

a. Remove screws holding loading door assembly and hinge to front panel, Figure 17.
b. Remove screw from door pull, *Figure 24,* and the remaining screws around the door perimeter and separate panels, *Figure 24.*

NOTE: All screws are interchangeable except for the screw in the recessed door pull.

IMPORTANT: When reinstalling door pull, DO NOT over-tighten the screw.

15. DOOR STRIKER

a. Open loading door.
b. Remove screw holding door strike and bracket to loading door, *Figure 24,* and remove striker and bracket.

NOTE: You may have to loosen the two screws on end of door to allow for striker and bracket removal.

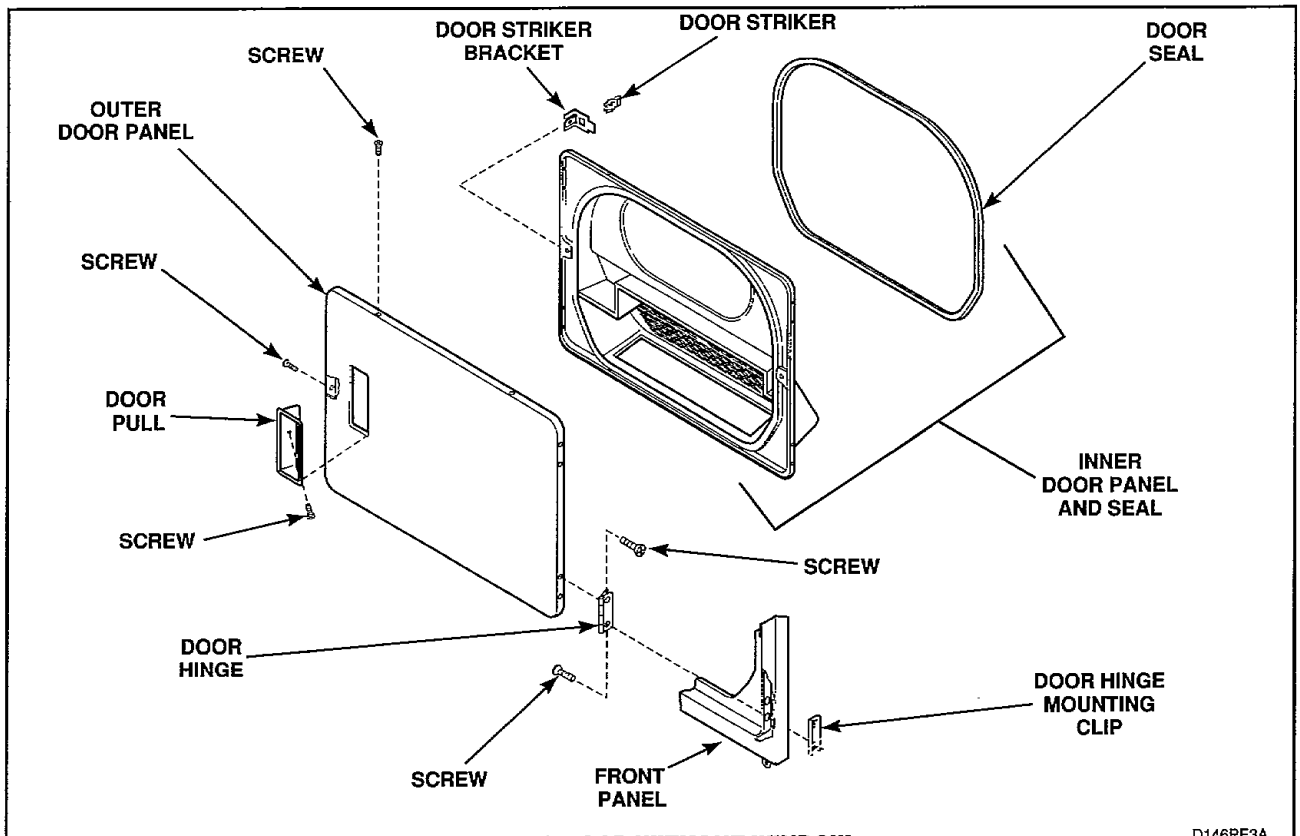

LOADING DOOR WITHOUT WINDOW

D146PE3A

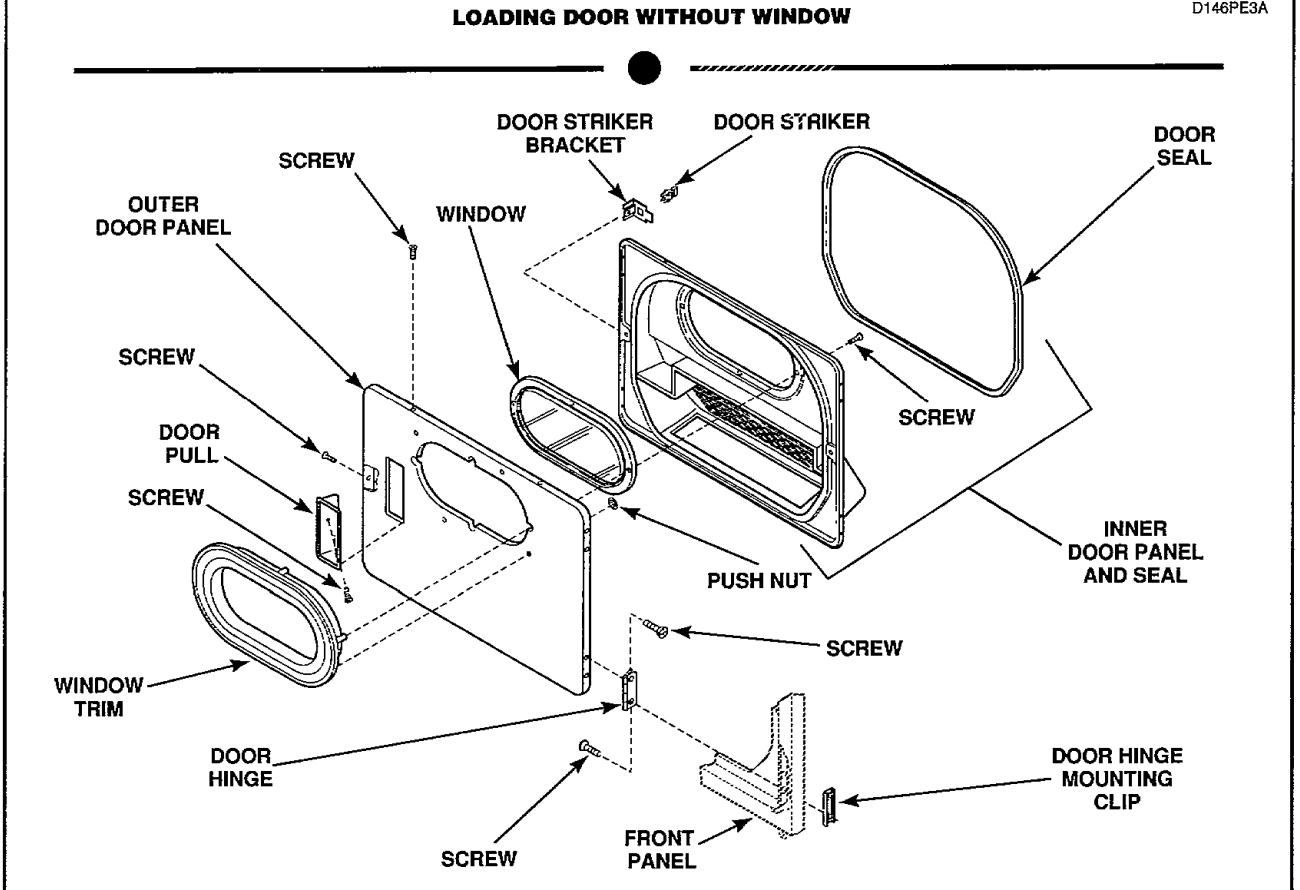

LOADING DOOR WITH WINDOW

D147PE3A

Figure 24

⚠WARNING

To reduce the risk of electrical shock, fire, explosion, serious injury or death:

- **Disconnect electric power to the dryer before servicing.**
- **Close gas shut-off valve to gas dryer before servicing.**
- **Never start the dryer with any guards/panels removed.**
- **Whenever ground wires are removed during servicing, these ground wires must be reconnected to ensure that the dryer is properly grounded.**

W001

16. DOOR SEAL

a. Open loading door.
b. Grasp either end of door seal at bottom of door and remove seal from tabs on inner door panel, *Figure 25.*

NOTE: When replacing seal, make sure seal is not stretched or distorted and the groove in the seal is installed on each tab on inner door panel, *Figure 25,* and the split in the seal is at the bottom of the door.

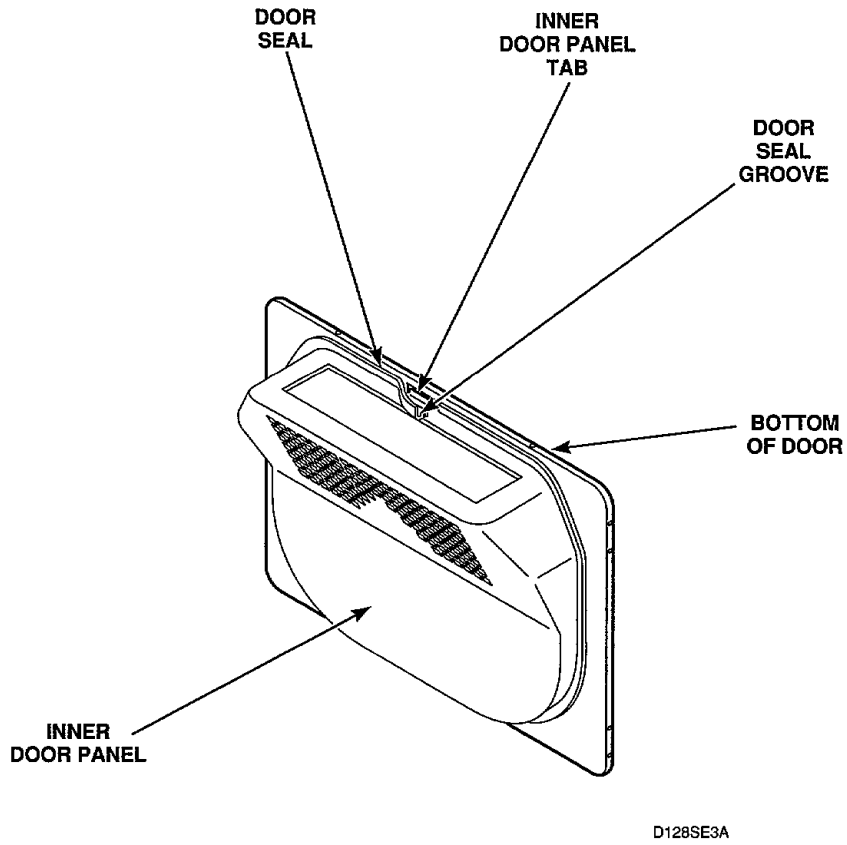

Figure 25

⚠WARNING

To reduce the risk of electrical shock, fire, explosion, serious injury or death:

- **Disconnect electric power to the dryer before servicing.**
- **Close gas shut-off valve to gas dryer before servicing.**
- **Never start the dryer with any guards/panels removed.**
- **Whenever ground wires are removed during servicing, these ground wires must be reconnected to ensure that the dryer is properly grounded.**

W001

17. FRONT PANEL AND PANEL SEAL

a. While supporting the lower access panel, remove two screws from bottom edge of lower front access panel, *Figure 9.*
b. Gently lower the access panel to disengage guide lugs from bottom edge of front panel.
c. Remove two screws holding bottom tabs on front panel to dryer cabinet, *Figure 10.* Swing bottom of front panel away from dryer to disengage hold-down clips (upper dryer) and guide lugs from control cabinet or cabinet top (depending on which dryer).
d. Disconnect wires from door switch, *Figure 11.*

NOTE: Refer to appropriate wiring diagram when rewiring switch.

e. Remove front panel seal from flange around inside of door opening, *Figure 26.*

NOTE: When reinstalling seal, make sure seal is properly positioned on front panel.

18. DOOR SWITCH

a. While supporting the lower access panel, remove two screws from bottom edge of lower front access panel, *Figure 9.*
b. Gently lower the access panel to disengage guide lugs from bottom edge of front panel.
c. Remove two screws holding bottom tabs on front panel to dryer cabinet, *Figure 10.* Swing bottom of front panel away from dryer to disengage hold-down clips (upper dryer) and guide lugs from control cabinet or cabinet top (depending on which dryer).
d. Disconnect wires from door switch, *Figure 11.*

NOTE: Refer to appropriate wiring diagram when rewiring switch.

e. Depress tabs on top and bottom of door switch and push switch out of front panel, *Figure 11.*

19. DOOR STRIKER CATCH

a. While supporting the lower access panel, remove two screws from bottom edge of lower front access panel, *Figure 9.*
b. Gently lower the access panel to disengage guide lugs from bottom edge of front panel.
c. Remove two screws holding bottom tabs on front panel to dryer cabinet, *Figure 10.* Swing bottom of front panel away from dryer to disengage hold-down clips (upper dryer) and guide lugs from control cabinet or cabinet top (depending on which dryer).
d. Disconnect wires from door switch, *Figure 11.*

NOTE: Refer to appropriate wiring diagram when rewiring switch.

e. Depress tabs on top and bottom of door catch and push catch out of front panel, *Figure 26.*

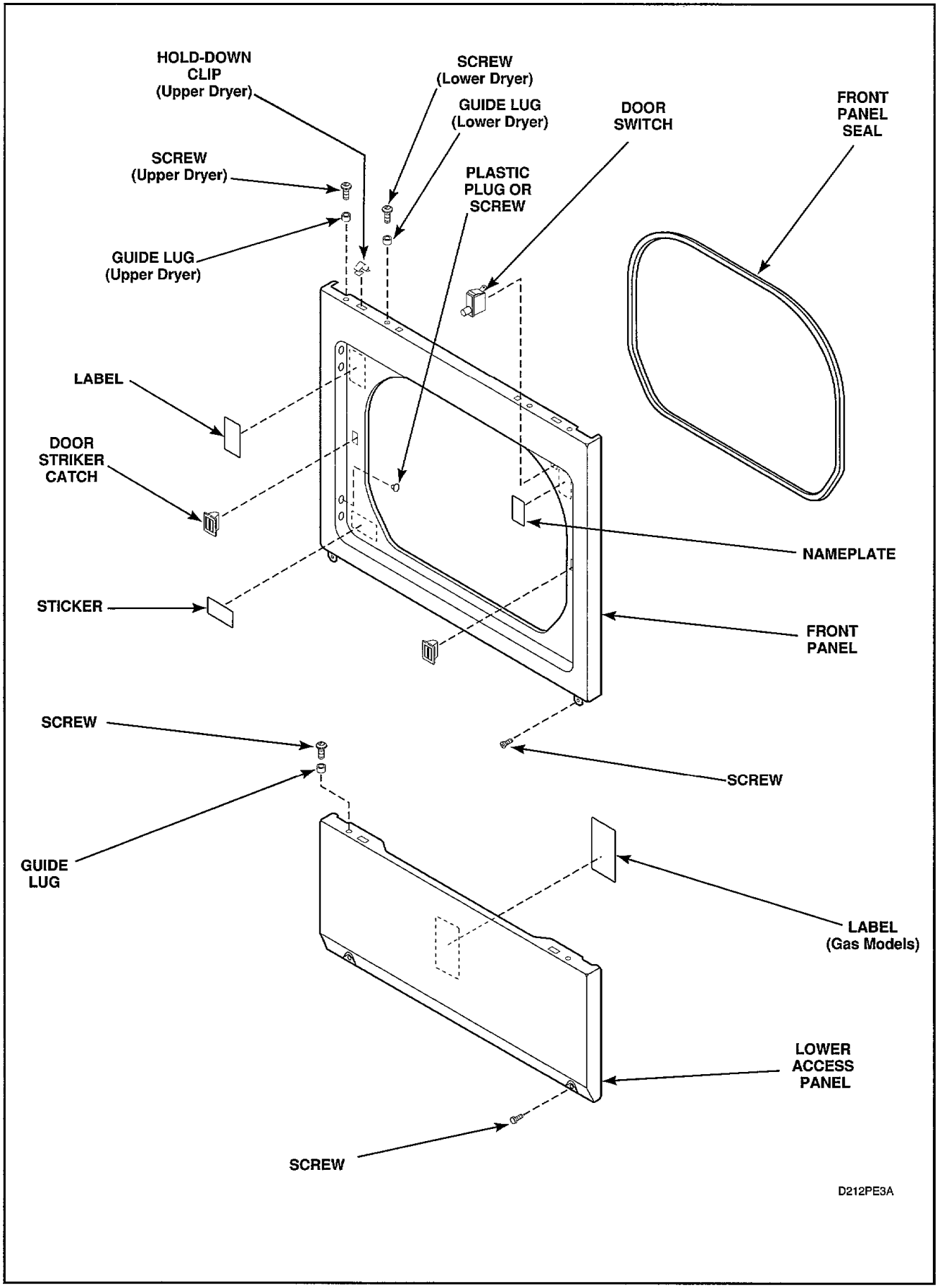
HOLD-DOWN CLIP (Upper Dryer)
SCREW (Lower Dryer)
GUIDE LUG (Lower Dryer)
DOOR SWITCH
FRONT PANEL SEAL
SCREW (Upper Dryer)
PLASTIC PLUG OR SCREW
GUIDE LUG (Upper Dryer)
LABEL
DOOR STRIKER CATCH
NAMEPLATE
STICKER
FRONT PANEL
SCREW
SCREW
GUIDE LUG
LABEL (Gas Models)
LOWER ACCESS PANEL
SCREW
D212PE3A

Figure 26

⚠WARNING

To reduce the risk of electrical shock, fire, explosion, serious injury or death:

- **Disconnect electric power to the dryer before servicing.**
- **Close gas shut-off valve to gas dryer before servicing.**
- **Never start the dryer with any guards/panels removed.**
- **Whenever ground wires are removed during servicing, these ground wires must be reconnected to ensure that the dryer is properly grounded.**

W001

20. HOLD-DOWN CLIPS AND GUIDE LUGS (FRONT PANEL)

a. While supporting the lower access panel, remove two screws from bottom edge of lower front access panel, *Figure 9.*
b. Gently lower the access panel to disengage guide lugs from bottom edge of front panel.
c. Remove two screws holding bottom tabs on front panel to dryer cabinet, *Figure 10.* Swing bottom of front panel away from dryer to disengage hold-down clips (upper dryer) and guide lugs from control cabinet or cabinet top (depending on which dryer).
d. Disconnect wires from door switch, *Figure 11.*

NOTE: Refer to appropriate wiring diagram when rewiring switch.

e. Compress hold-down clips and remove from slot in top flange of upper front panel.
f. Remove screws holding guide lugs to front panel, *Figure 26.*

⚠WARNING

To reduce the risk of electrical shock, fire, explosion, serious injury or death:
- **Disconnect electric power to the dryer before servicing.**
- **Close gas shut-off valve to gas dryer before servicing.**
- **Never start the dryer with any guards/panels removed.**
- **Whenever ground wires are removed during servicing, these ground wires must be reconnected to ensure that the dryer is properly grounded.**

W001

21. BURNER SYSTEM COMPONENTS (Gas Models)

a. **Complete Gas Valve Assembly.**

(1) While supporting the lower access panel, remove two screws from bottom edge of lower front access panel, *Figure 9.*
(2) Gently lower the access panel to disengage guide lugs from bottom edge of front panel.
(3) Close gas shut-off valve, disconnect igniter wires at disconnect blocks, sensor wires from flame sensor terminals, and wires from gas valve coils at the quick disconnect blocks, *Figure 29.*
(4) Disconnect gas shut-off valve from gas valve at the union nut, *Figure 27.*
(5) Remove two screws holding valve and mounting bracket to base.
(6) Slide assembly forward, then lift gas valve and mounting bracket from base, *Figure 27.*

NOTE: When reinstalling gas valve and mounting bracket, tab on rear of mounting bracket must be slid into slot in dryer base.

NOTE: The holding and booster coil, and secondary coil can be replaced individually. Refer to parts manual for correct part numbers.

b. **Burner Tube, Igniter and Bracket.**

NOTE: Burner tube and igniter can be removed without removing gas valve and bracket.

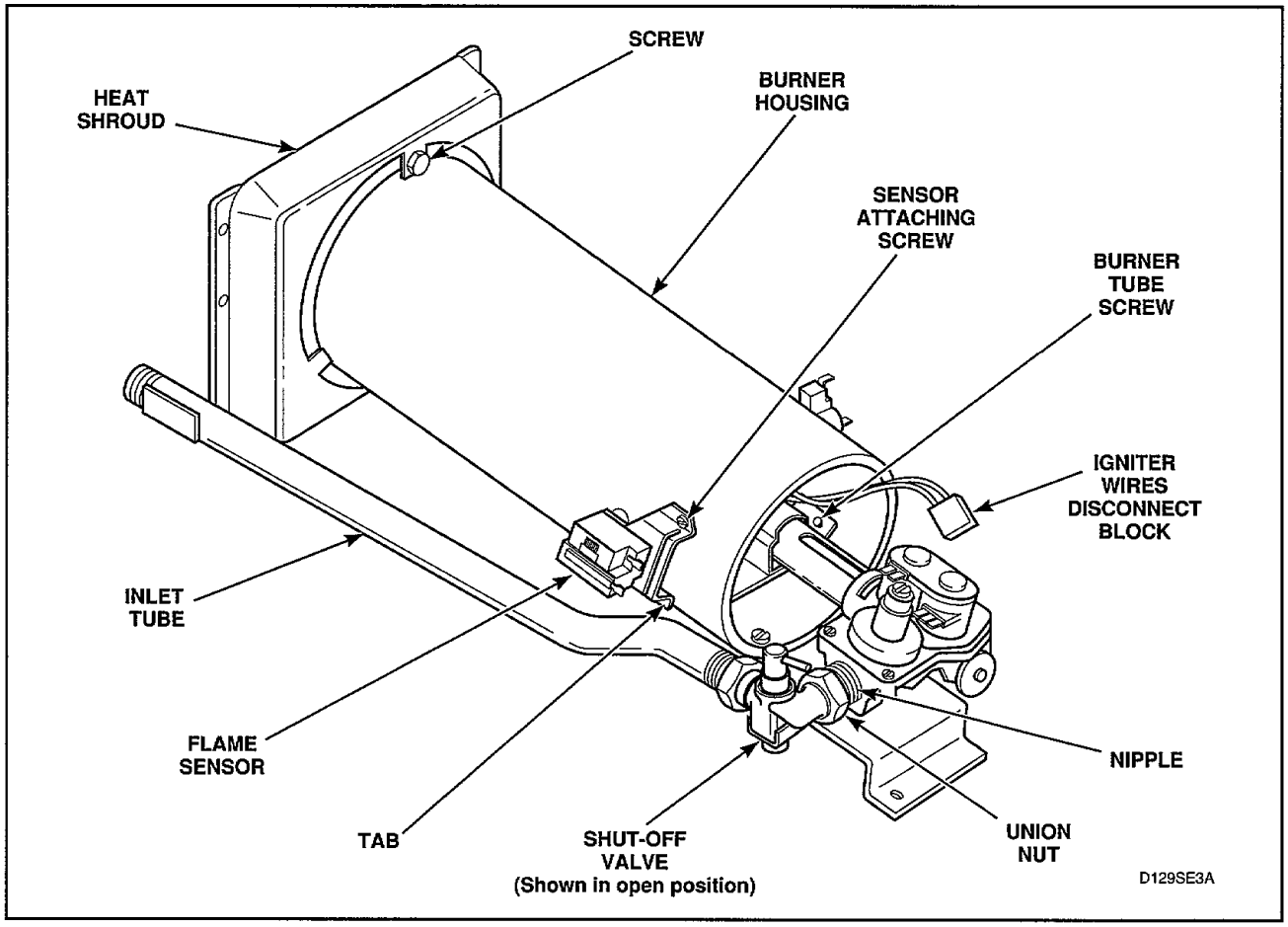

Figure 27

⚠WARNING

To reduce the risk of electrical shock, fire, explosion, serious injury or death:
- **Disconnect electric power to the dryer before servicing.**
- **Close gas shut-off valve to gas dryer before servicing.**
- **Never start the dryer with any guards/panels removed.**
- **Whenever ground wires are removed during servicing, these ground wires must be reconnected to ensure that the dryer is properly grounded.**

W001

(1) Remove one screw from right side of burner housing holding burner tube in place, *Figure 27.*
(2) Gently move burner tube toward rear of dryer to disengage tab from slot on left side of burner housing, *Figure 27.*
(3) Carefully rotate burner tube and igniter counterclockwise so tab is at 8 o'clock position.
(4) Move air shutter end of burner tube slightly to right and CAREFULLY remove burner tube and igniter assembly out through front of dryer.
(5) Remove screw holding igniter and bracket to burner tube and remove igniter and bracket, *Figure 28.*

IMPORTANT: The igniter is very fragile. Be careful not to damage it during removal.

IMPORTANT: Handle igniter by grasping the white ceramic portion or bracket only. DO NOT handle silicon carbide portion of igniter with hands or allow any oil, grease or other foreign material to contaminate it. Oil, grease and other impurities or hairline cracks will cause the igniter to burn out.

c. **Flame Sensor.**

1) While supporting the lower access panel, remove two screws from bottom edge of lower front access panel, *Figure 9.*
(2) Gently lower the access panel to disengage guide lugs from bottom edge of front panel.
(3) Remove wires from sensor terminals, *Figure 27.*
(4) Remove screw holding sensor to burner housing, *Figure 27.*

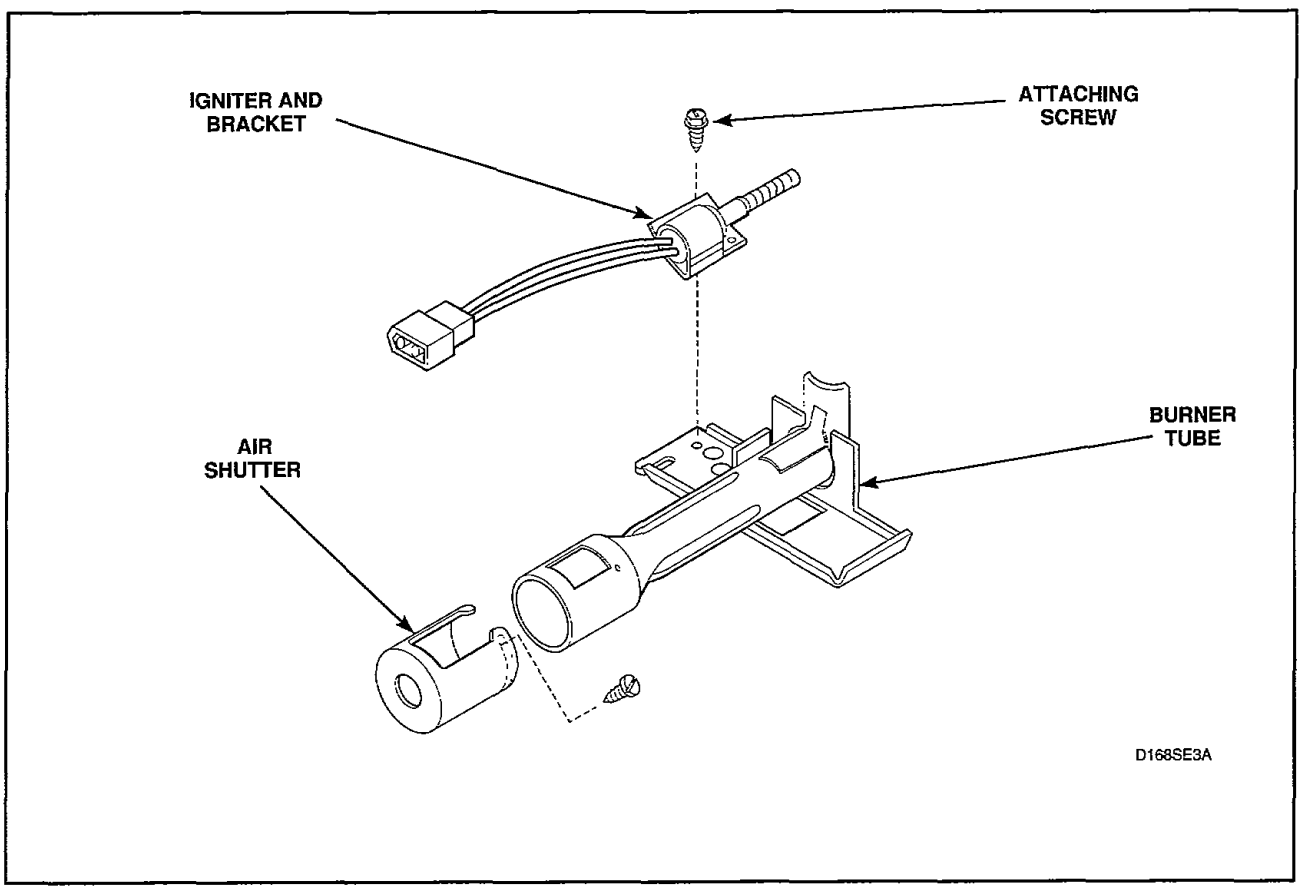

Figure 28

⚠WARNING

To reduce the risk of electrical shock, fire, explosion, serious injury or death:
- **Disconnect electric power to the dryer before servicing.**
- **Close gas shut-off valve to gas dryer before servicing.**
- **Never start the dryer with any guards/panels removed.**
- **Whenever ground wires are removed during servicing, these ground wires must be reconnected to ensure that the dryer is properly grounded.**

W001

22. BURNER HOUSING AND HEAT SHROUD (Gas Models)

a. While supporting the lower access panel, remove two screws from bottom edge of lower front access panel, *Figure 9.*
b. Gently lower the access panel to disengage guide lugs from bottom edge of front panel.
c. Disconnect igniter wires at disconnect blocks, sensor wires from flame sensor terminals, and wires from gas valve coils at quick disconnect blocks, *Figure 29.*
d. Remove screw from right side of burner housing holding burner tube in place, *Figure 29.*
e. Gently move burner tube toward rear of dryer to disengage tab, *Figure 27,* from slot on left side of burner housing.
f. Carefully rotate burner tube and igniter counterclockwise so tab is at 8 o'clock position.
g. Move air shutter end of burner tube slightly to the right and CAREFULLY remove burner tube and igniter assembly out through front of dryer.

IMPORTANT: The igniter is very fragile. Be careful not to damage it during removal.

h. Remove screw holding burner housing to heat shroud, *Figure 27.*
i. Remove screw holding front of burner housing to dryer base and remove housing out through front of dryer, *Figure 29.*
j. Remove two screws holding shroud to heater box and take shroud out through front of dryer.

23. LIMIT THERMOSTAT

a. While supporting the lower access panel, remove two screws from bottom edge of lower front access panel, *Figure 9.*
b. Gently lower the access panel to disengage guide lugs from bottom edge of front panel.
c. Disconnect wires and remove screws holding limit thermostat to burner housing or element plate, *Figure 29.*

24. HEATING ELEMENT (Electric Models)

a. While supporting the lower access panel, remove two screws from bottom edge of lower front access panel, *Figure 9.*
b. Gently lower the access panel to disengage guide lugs from bottom edge of front panel.
c. Remove two screws holding element and plate to heater box and pull element down and away from heater box, *Figure 29.*
d. Disconnect wires from element and plate, *Figure 29.*
e. Remove screws holding thermostat and thermal fuse to element plate, *Figure 29.*

NOTE: When reassembling, make sure all wire connections are tight on element terminals, thermal fuse and limit thermostat.

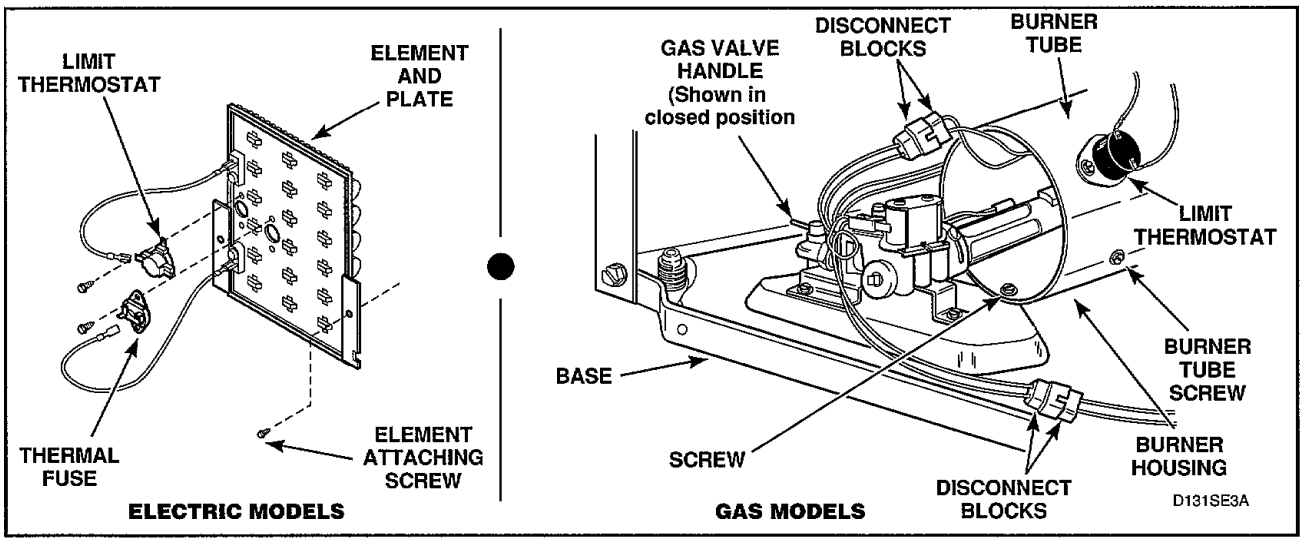

Figure 29

⚠WARNING

To reduce the risk of electrical shock, fire, explosion, serious injury or death:
- **Disconnect electric power to the dryer before servicing.**
- **Close gas shut-off valve to gas dryer before servicing.**
- **Never start the dryer with any guards/panels removed.**
- **Whenever ground wires are removed during servicing, these ground wires must be reconnected to ensure that the dryer is properly grounded.**

W001

25. THERMOSTAT AND HEATER

a. While supporting the lower access panel, remove two screws from bottom edge of lower front access panel, *Figure 9.*
b. Gently lower the access panel to disengage guide lugs from bottom edge of front panel.
c. Disconnect wires and remove thermostat attaching screws, *Figure 30,* and remove thermostat and heater.

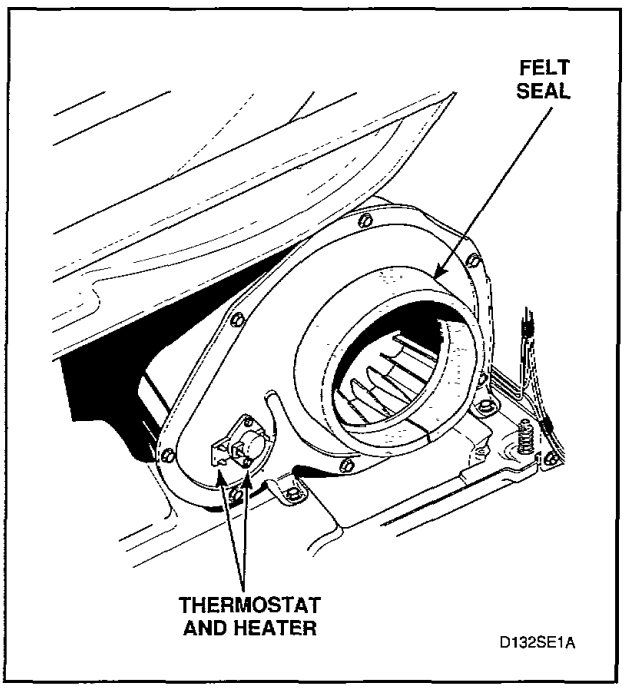

Figure 30

26. FRONT AIR DUCT

a. While supporting the lower access panel, remove two screws from bottom edge of lower front access panel, *Figure 9.*
b. Gently lower the access panel to disengage guide lugs from bottom edge of front panel.
c. Open loading door and remove two screws from lint filter and lift filter out of bulkhead, *Figure 17.*

IMPORTANT: When installing lint filter, make sure to install the filter with the wording on the filter facing the front of the dryer.

d. Remove two screws holding air duct to front bulkhead and remove air duct, *Figure 31.*

⚠WARNING

To reduce the risk of serious injury or death by carbon monoxide and other gases in gas dryers, carefully read and follow all instructions given in this section.

W005

IMPORTANT: When reassembling, make sure felt seal on exhaust fan cover, *Figure 30,* makes air tight seal on flange of duct, *Figure 31.* If the seal is installed improperly, the airflow through the exhaust system will be restricted which can adversly affect dryer performance.

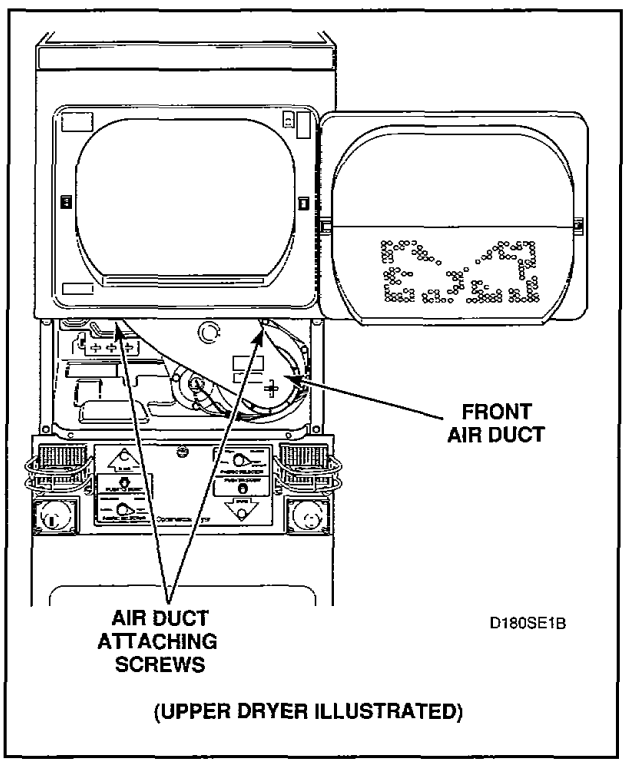

Figure 31

⚠WARNING

To reduce the risk of electrical shock, fire, explosion, serious injury or death:
- **Disconnect electric power to the dryer before servicing.**
- **Close gas shut-off valve to gas dryer before servicing.**
- **Never start the dryer with any guards/panels removed.**
- **Whenever ground wires are removed during servicing, these ground wires must be reconnected to ensure that the dryer is properly grounded.**

W001

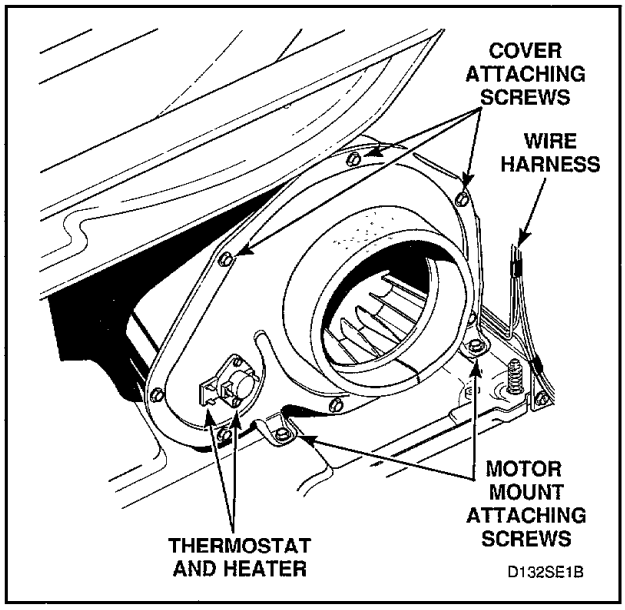

Figure 32

27. MOTOR AND EXHAUST ASSEMBLY

a. While supporting the lower access panel, remove two screws from bottom edge of lower front access panel, *Figure 9.*
b. Gently lower the access panel to disengage guide lugs from bottom edge of front panel.
c. Open loading door and remove two screws from lint filter and lift filter out of bulkhead, *Figure 17.*

NOTE: When installing lint filter, make sure to install the filter with the wording on the filter facing the front of the dryer.

d. Remove two screws holding air duct to front bulkhead and remove air duct, *Figure 31.*

⚠WARNING

To reduce the risk of serious injury or death by carbon monoxide and other gases in gas dryers, carefully read and follow all instructions given in this section.

W005

IMPORTANT: When reassembling, make sure felt seal on exhaust fan cover, *Figure 30,* makes air tight seal on flange of duct, *Figure 31.* If the seal is installed improperly, the airflow through the exhaust system will be restricted which can adversely affect dryer performance.

e. Disconnect wires from thermostat and heater, *Figure 32.*

NOTE: Refer to appropriate wiring diagram when rewiring thermostat and heater.

(continued)

⚠WARNING

To reduce the risk of electrical shock, fire, explosion, serious injury or death:
- **Disconnect electric power to the dryer before servicing.**
- **Close gas shut-off valve to gas dryer before servicing.**
- **Never start the dryer with any guards/panels removed.**
- **Whenever ground wires are removed during servicing, these ground wires must be reconnected to ensure that the dryer is properly grounded.**

W001

f. Remove cylinder belt from idler and motor pulleys, *Figure 33.*

NOTE: When installing belt, make sure belt is properly installed on motor and idler pulleys, and is on the correct side of the idler lever, *Figure 33.* Belt must be positioned around cylinder approximately three inches ahead of the rear rib on cylinder, *Figure 40,* with the ribbed surface of the belt against the cylinder. After installing belt, manually rotate cylinder counterclockwise to check that belt is properly aligned.

g. Disengage motor wire harness connection block from motor switch by pressing in on the movable locking tabs (located on each end of the connection block) and pulling away from motor, *Figure 36.*

IMPORTANT: When reinstalling motor and exhaust assembly, be sure wire harness on right side is clipped to motor mounting bracket and is routed along dryer base (between motor mounting bracket and right side of cabinet), *Figure 32.* Tab on rear of motor mounting bracket must be slid into slot in dryer base. Make sure the belt has been installed on the correct side of the idler lever, *Figure 33.*

h. Pull assembly forward and disengage the middle exhaust duct.

i. Rotate the motor and exhaust assembly 90° **counterclockwise** and slide out through front of dryer.

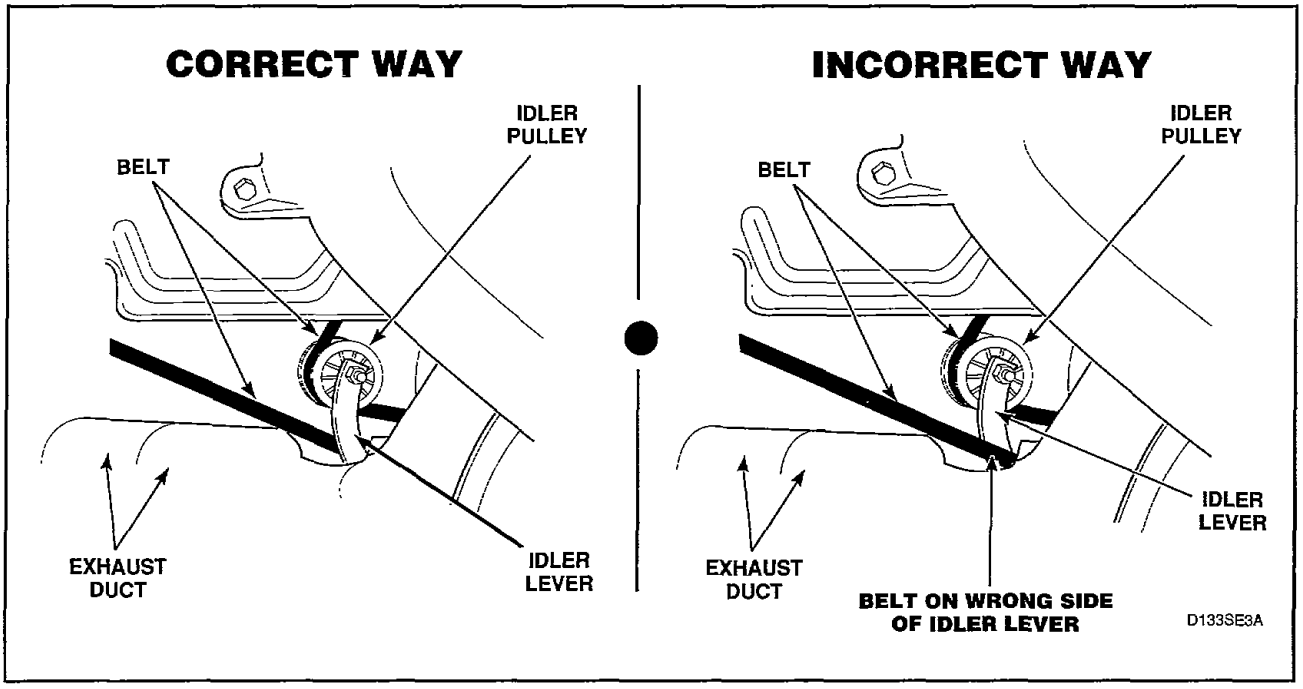

Figure 33

⚠WARNING

To reduce the risk of electrical shock, fire, explosion, serious injury or death:
- **Disconnect electric power to the dryer before servicing.**
- **Close gas shut-off valve to gas dryer before servicing.**
- **Never start the dryer with any guards/panels removed.**
- **Whenever ground wires are removed during servicing, these ground wires must be reconnected to ensure that the dryer is properly grounded.**

W001

j. **Motor pulley and idler pulley assemblies.**

Refer to *Figure 34* for motor and idler pulley removal.

NOTE: Use a 7/8 inch socket and unthread motor pulley from motor shaft (left hand thread).

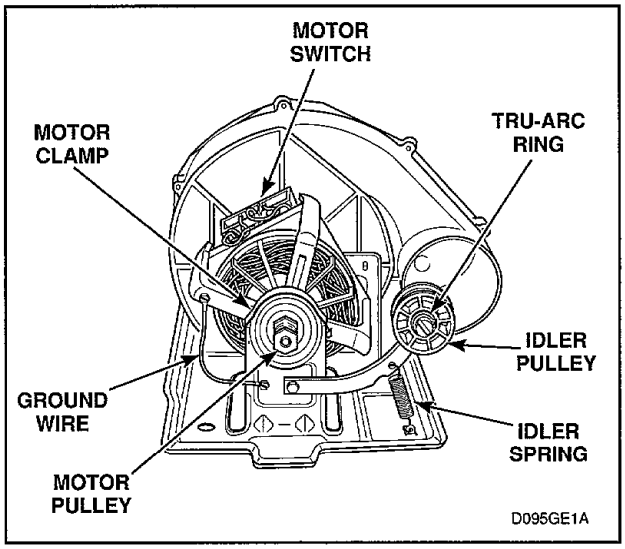

Figure 34

k. **Impeller and housing.**
(1) Remove screws holding cover to housing, *Figure 32.*
(2) Hold motor pulley securely and unthread impeller from motor shaft (right hand thread). Use a 7/8 inch, 6 point socket to aid in the removal of the impeller.
(3) Remove three screws holding the exhaust housing to the motor mounting bracket, *Figure 35.*

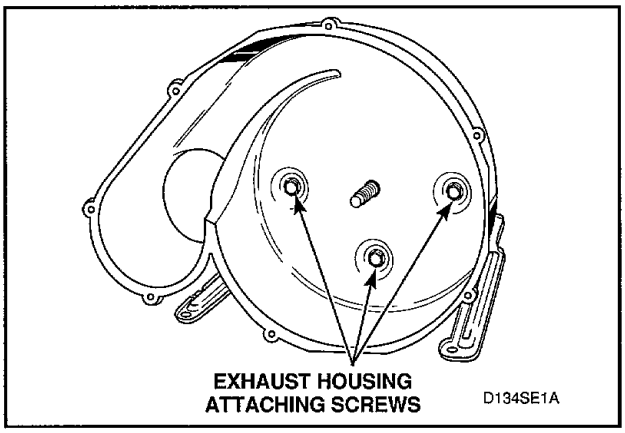

Figure 35

⚠WARNING

To reduce the risk of electrical shock, fire, explosion, serious injury or death:
- **Disconnect electric power to the dryer before servicing.**
- **Close gas shut-off valve to gas dryer before servicing.**
- **Never start the dryer with any guards/panels removed.**
- **Whenever ground wires are removed during servicing, these ground wires must be reconnected to ensure that the dryer is properly grounded.**

W001

l. **Motor**

(1) Disengage motor wire harness connection block from the motor by pressing in on the movable locking tabs (located on each side of the connection block) and pulling connection block away from motor, *Figure 36.*

IMPORTANT: To avoid an open circuit, DO NOT pull on the connection block wires when removing blocks from motor as this could damage the wires or terminal crimping.

Before attaching wire harness connection block to motor, make sure all the male terminals on motor are straight and are capable of accepting the terminals from the wire harness connection block.

(2) Disconnect ground wire from motor, *Figure 34.*

(3) Use a screwdriver and pry two motor clamps off motor mounting bracket, *Figure 34.* Then lift motor out of mounting bracket.

NOTE: When replacing motor, motor switch location should be at 10 o'clock position (viewed from pulley end, *Figure 34*) with the anti-rotating notch (located on the front and rear cradles) on the motor mounting bracket.

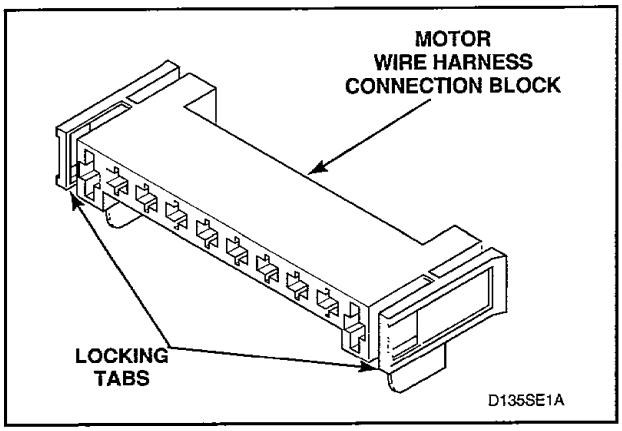

Figure 36

m. **Motor Connection Block Terminals**

Remove terminals from the motor wire harness connection block using No. 283P4 Terminal Extractor Tool as follows:

(1) Insert the tool into the block on the back of the terminal being removed, *Figure 37.*

(2) Apply tool pressure to compress the terminal locking tab on terminal and force the terminal and wire out back side of connection block, *Figure 37.*

To install terminal in connection block, insert terminal (with wire securely crimped in place) into back side of connection block. Push terminal into connection block until locking tab on terminal spreads and holds terminal in place.

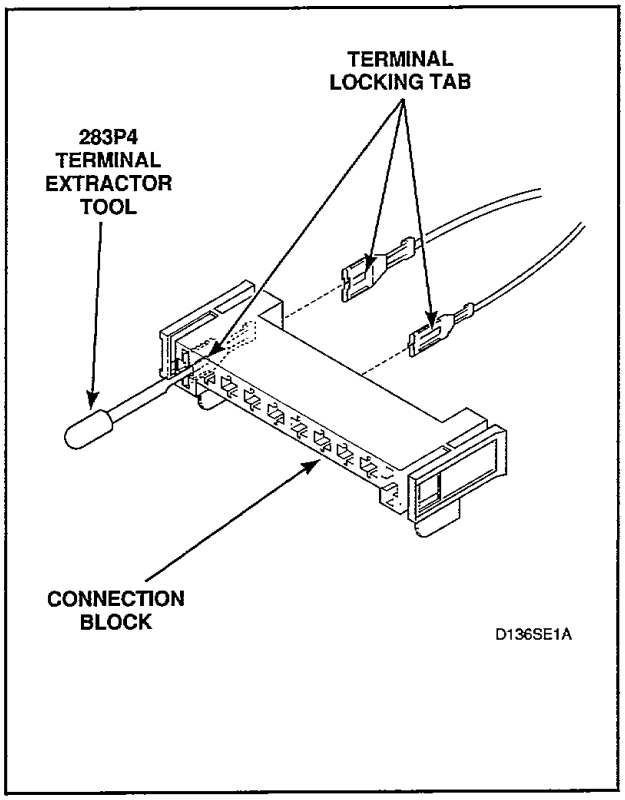

Figure 37

⚠WARNING

To reduce the risk of electrical shock, fire, explosion, serious injury or death:
- **Disconnect electric power to the dryer before servicing.**
- **Close gas shut-off valve to gas dryer before servicing.**
- **Never start the dryer with any guards/panels removed.**
- **Whenever ground wires are removed during servicing, these ground wires must be reconnected to ensure that the dryer is properly grounded.**

W001

28. FRONT BULKHEAD ASSEMBLY

a. While supporting the lower access panel, remove two screws from bottom edge of lower front access panel, *Figure 9.*
b. Gently lower the access panel to disengage guide lugs from bottom edge of front panel.
c. Remove two screws holding bottom tabs on front panel to dryer cabinet, *Figure 10.* Swing bottom of front panel away from dryer to disengage hold-down clips (upper dryer) and guide lugs from control cabinet or cabinet top (depending on which dryer).
d. Disconnect wires from door switch, *Figure 11.*

NOTE: Refer to appropriate wiring diagram when rewiring switch.

e. Disengage belt from motor and idler pulleys, *Figure 33.*

NOTE: When installing belt, make sure belt is properly installed on motor and idler pulleys, and is on the correct side of the idler lever, *Figure 33.* Belt must be positioned around cylinder approximately three inches ahead of the rear rib on cylinder, *Figure 40,* with the ribbed surface of the belt against the cylinder. After installing belt, manually rotate cylinder counterclockwise to check that belt is properly aligned.

f. Remove four screws holding bulkhead to front flange of cabinet, *Figure 38.* Lift complete bulkhead assembly out of slots in cabinet.

NOTE: When reassembling the front bulkhead to the cabinet, hold glides in position with finger tips on the edges of glides. Once bulkhead is in place, inspect the glide position with a mirror to insure the glides are aligned with the cylinder, making sure the tabs are visible, *Figure 39.*

⚠WARNING

To reduce the risk of serious injury or death by carbon monoxide and other gases in gas dryers, carefully read and follow all instructions given in this section.

W005

IMPORTANT: When reassembling, make sure felt seal on exhaust fan cover, *Figure 30,* makes airtight seal on flange of duct, *Figure 31.* If the seal is installed improperly, the airflow through the exhaust system will be restricted which can adversely affect dryer performance.

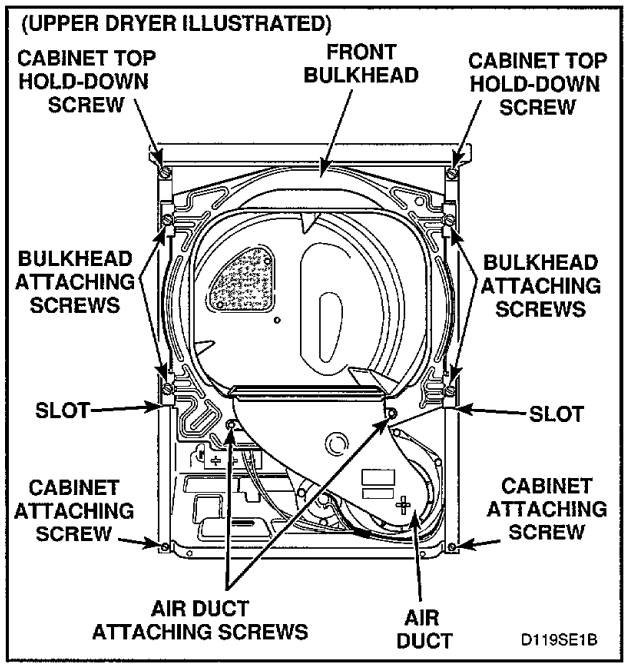

Figure 38

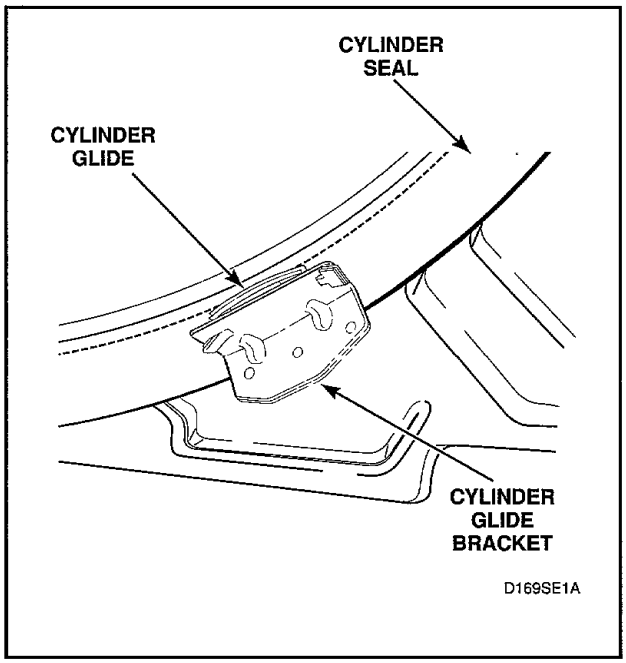

Figure 39

(continued)

⚠WARNING

To reduce the risk of electrical shock, fire, explosion, serious injury or death:
- **Disconnect electric power to the dryer before servicing.**
- **Close gas shut-off valve to gas dryer before servicing.**
- **Never start the dryer with any guards/panels removed.**
- **Whenever ground wires are removed during servicing, these ground wires must be reconnected to ensure that the dryer is properly grounded.**

W001

g. **Cylinder glides and pads** *(Figure 39)*
   (1) Unsnap glides from each glide bracket and remove glides and pads.
h. **Front cylinder seal** *(Figure 39)*
   Cylinder seal is cemented to the bulkhead.

IMPORTANT: The replacement seal can be adhered to the bulkhead using No. 22506P Sealant. This is accomplished by applying a bead of sealant around the entire flanged area where the felt seal contacts the bulkhead.

29. CYLINDER BELT

a. While supporting the lower access panel, remove two screws from bottom edge of lower front access panel, *Figure 9.*
b. Gently lower the access panel to disengage guide lugs from bottom edge of front panel.
c. Remove two screws holding bottom tabs on front panel to dryer cabinet, *Figure 10.* Swing bottom of front panel away from dryer to disengage hold-down clips (upper dryer) and guide lugs from control cabinet or cabinet top (depending on which dryer).
d. Disconnect wires from door switch, *Figure 11.*

NOTE: Refer to appropriate wiring diagram when rewiring switch.

e. Disengage belt from motor and idler pulleys, *Figure 33.*
f. Remove four screws holding bulkhead to front flange of cabinet and lift complete bulkhead assembly out of slots in cabinet, *Figure 38.*

NOTE: When reassembling the front bulkhead to the cabinet, hold glides in position with finger tips on the edges of glides. Once bulkhead is in place, inspect the glide position with a mirror to ensure the glides are aligned with the cylinder, making sure the tabs are visible, *Figure 39.*

⚠WARNING

To reduce the risk of serious injury or death by carbon monoxide and other gases in gas dryers, carefully read and follow all instructions given in this section.

W005

IMPORTANT: During reinstallation of front bulkhead, make sure that air duct is properly positioned with the flange inside of the felt seal on the exhaust fan cover, *Figure 30.* If the seal is installed improperly, the airflow through the exhaust system will be restricted which can adversely affect dryer performance.

g. While supporting cylinder, carefully remove belt off cylinder.

NOTE: When installing belt, make sure belt is properly installed on motor and idler pulleys, and is on the correct side of the idler lever, *Figure 33.* Belt must be positioned around cylinder approximately three inches ahead of the rear rib on cylinder, *Figure 40,* with the ribbed surface of the belt against cylinder. After installing belt, manually rotate cylinder counterclockwise to check that belt is properly aligned.

⚠WARNING

To reduce the risk of electrical shock, fire, explosion, serious injury or death:
- **Disconnect electric power to the dryer before servicing.**
- **Close gas shut-off valve to gas dryer before servicing.**
- **Never start the dryer with any guards/panels removed.**
- **Whenever ground wires are removed during servicing, these ground wires must be reconnected to ensure that the dryer is properly grounded.**

W001

30. CYLINDER ASSEMBLY

a. While supporting the lower access panel, remove two screws from bottom edge of lower front access panel, *Figure 9.*
b. Gently lower the access panel to disengage guide lugs from bottom edge of front panel.
c. Remove two screws holding bottom tabs on front panel to dryer cabinet, *Figure 10.* Swing bottom of front panel away from dryer to disengage hold-down clips (upper dryer) and guide lugs from control cabinet or cabinet top (depending on which dryer).
d. Disconnect wires from door switch, *Figure 11.*

NOTE: Refer to appropriate wiring diagram when rewiring switch.

e. Disengage belt from motor and idler pulleys, *Figure 33.*

NOTE: When installing belt, make sure belt is properly installed on motor and idler pulleys, and is on the correct side of the idler lever, *Figure 33.* Belt must be positioned around cylinder approximately three inches ahead of the rear rib on cylinder, *Figure 40,* with the ribbed surface of the belt against cylinder. After installing belt, manually rotate cylinder counterclockwise to check that belt is properly aligned.

f. Remove four screws holding bulkhead to front flange of cabinet and lift complete bulkhead assembly out of slots in cabinet, *Figure 38.*

NOTE: When reassembling the front bulkhead to the cabinet, hold glides in position with finger tips on the edges of glides. Once bulkhead is in place, inspect the glide position with a mirror to ensure the glides are aligned with the cylinder, making sure the tabs are visible, *Figure 39.*

⚠WARNING

To reduce the risk of serious injury or death by carbon monoxide and other gases in gas dryers, carefully read and follow all instructions given in this section.

W005

IMPORTANT: During reinstallation of front bulkhead, make sure that air duct is properly positioned with the flange inside of the felt seal on the exhaust fan cover, *Figure 30.* If the seal is installed improperly, the airflow through the exhaust system will be restricted which can adversely affect dryer performance.

g. Loosen two cabinet top hold-down screw, *Figure 38.*
h. Manually rotate cylinder until one of the baffles is at the 6 o'clock position and carefully remove cylinder out through front of dryer.
i. **Baffles**
Remove screws holding baffles to cylinder, *Figure 40.*

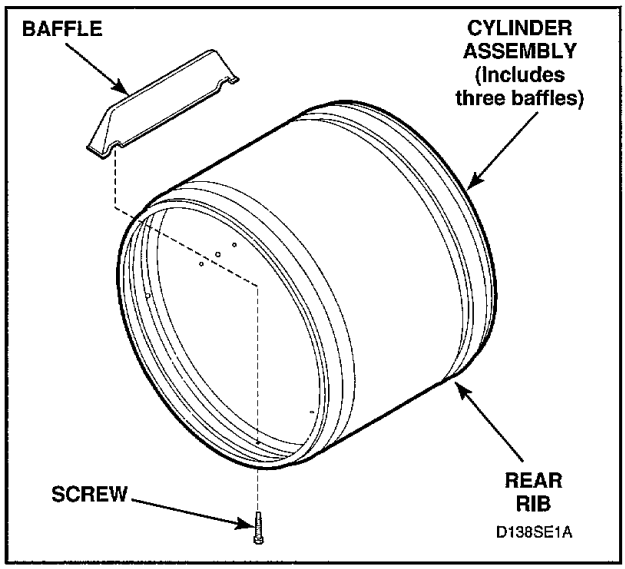

Figure 40

⚠WARNING

To reduce the risk of electrical shock, fire, explosion, serious injury or death:
- **Disconnect electric power to the dryer before servicing.**
- **Close gas shut-off valve to gas dryer before servicing.**
- **Never start the dryer with any guards/panels removed.**
- **Whenever ground wires are removed during servicing, these ground wires must be reconnected to ensure that the dryer is properly grounded.**

W001

31. REAR SEAL

a. While supporting the lower access panel, remove two screws from bottom edge of lower front access panel, *Figure 9.*
b. Gently lower the access panel to disengage guide lugs from bottom edge of front panel.
c. Remove two screws holding bottom tabs on front panel to dryer cabinet, *Figure 10.* Swing bottom of front panel away from dryer to disengage hold-down clips (upper dryer) and guide lugs from control cabinet or cabinet top (depending on which dryer).
d. Disconnect wires from door switch, *Figure 11.*

NOTE: Refer to appropriate wiring diagram when rewiring switch.

e. **Cabinet top — Upper Dryer:**
   (1) Remove two cabinet top hold-down screws, *Figure 38.*
   (2) Raise front of cabinet top hinging it on the rear hinges, *Figure 16.*

NOTE: When servicing, cabinet top may be raised and hinged on the rear hinges, or supported against the wall behind the dryer.

f. Disengage belt from motor and idler pulleys, *Figure 33.*

NOTE: When installing belt, make sure belt is properly installed on motor and idler pulleys, and is on the correct side of the idler lever, *Figure 33.* Belt must be positioned around cylinder approximatley three inches ahead of the rear rib on cylinder, *Figure 40,* with the ribbed surface of the belt against cylinder. After installing belt, manually rotate cylinder counterclockwise to check that belt is properly aligned.

k. Remove four screws holding bulkhead to front flange of cabinet and lift complete bulkhead assembly out of slots in cabinet, *Figure 38.*

NOTE: When reassembling the front bulkhead to the cabinet, hold glides in position with finger tips on the edges of glides. Once bulkhead is in place, inspect the glide position with a mirror to ensure the glides are aligned with the cylinder, making sure the tabs are visible, *Figure 39.*

⚠WARNING

To reduce the risk of serious injury or death by carbon monoxide and other gases in gas dryers, carefully read and follow all instructions given in this section.

W005

IMPORTANT: During reinstallation of front bulkhead, make sure that air duct is properly positioned with the flange inside of the felt seal on the exhaust fan cover, *Figure 30.* If the seal is installed improperly, the airflow through the exhaust system will be restricted which can adversely affect dryer performance.

l. Manually rotate cylinder until one of the baffles is at the 6 o'clock position and carefully remove cylinder out through front of dryer.
m. Pull rear cylinder seal from flanged edge of bulkhead, *Figure 41.*

IMPORTANT: The replacement seal can be adhered to the bulkhead using No. 22506P Sealant. This is accomplished by applying a bead of sealant around the entire flanged area where the felt seal contacts the bulkhead.

⚠WARNING

To reduce the risk of electrical shock, fire, explosion, serious injury or death:
- **Disconnect electric power to the dryer before servicing.**
- **Close gas shut-off valve to gas dryer before servicing.**
- **Never start the dryer with any guards/panels removed.**
- **Whenever ground wires are removed during servicing, these ground wires must be reconnected to ensure that the dryer is properly grounded.**

W001

32. CYLINDER ROLLERS

a. While supporting the lower access panel, remove two screws from bottom edge of lower front access panel, *Figure 9.*
b. Gently lower the access panel to disengage guide lugs from bottom edge of front panel.
c. Remove two screws holding bottom tabs on front panel to dryer cabinet, *Figure 10.* Swing bottom of front panel away from dryer to disengage hold-down clips (upper dryer) and guide lugs from control cabinet or cabinet top (depending on which dryer).
d. Disconnect wires from door switch, *Figure 11.*

NOTE: Refer to appropriate wiring diagram when rewiring switch.

e. Disengage belt from motor and idler pulleys, *Figure 33.*

NOTE: When installing belt, make sure belt is properly installed on motor and idler pulleys, and is on the correct side of the idler lever, *Figure 33.* Belt must be positioned around cylinder approximately three inches ahead of rear rib on cylinder, *Figure 40,* with the ribbed surface of the belt against cylinder. After installing belt, manually rotate cylinder counterclockwise to check that belt is properly aligned.

f. Remove four screws holding bulkhead to front flange of cabinet and lift complete bulkhead assembly out of slots in cabinet, *Figure 38.*

NOTE: When reassembling the front bulkhead to the cabinet, hold glides in position with finger tips on the edges of glides. Once bulkhead is in place, inspect the glide position with a mirror to ensure the glides are aligned with the cylinder, making sure the tabs are visible, *Figure 39.*

⚠WARNING

To reduce the risk of serious injury or death by carbon monoxide and other gases in gas dryers, carefully read and follow all instructions given in this section.

W005

IMPORTANT: During reinstallation of front bulkhead, make sure that air duct is properly positioned with the flange inside of the felt seal on the exhaust fan cover, *Figure 30.* If the seal is installed improperly, the airflow through the exhaust system will be restricted which can adversely affect dryer performance.

g. Pull cylinder forward allowing rear of cylinder to drop down exposing rollers, *Figure 42.*
h. Refer to *Figure 42* for removal of roller from bulkhead.

33. OUTLET COVER

Open door and remove two screws holding outlet cover to rear bulkhead, *Figure 41.*

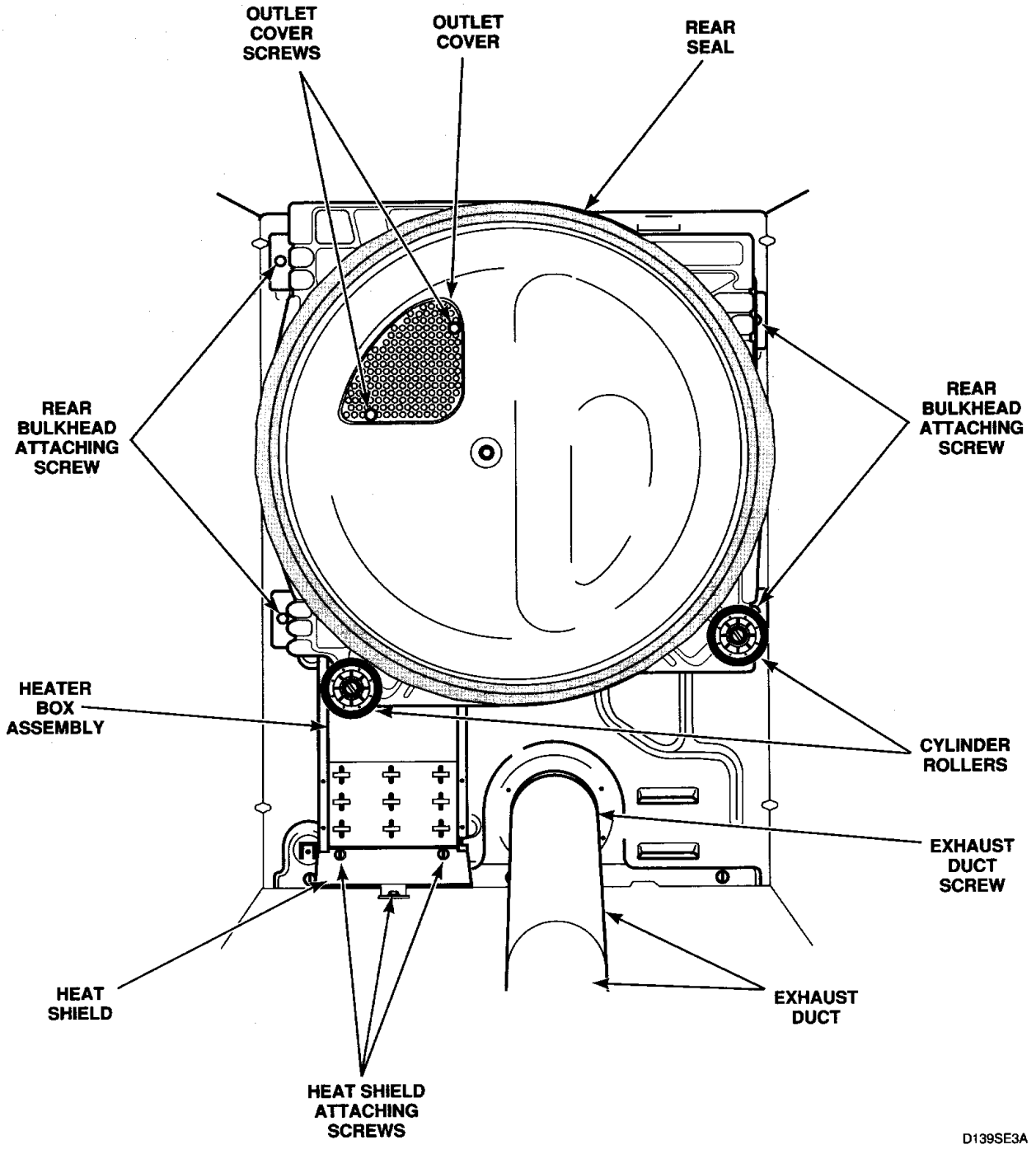

REAR BULKHEAD

Figure 41

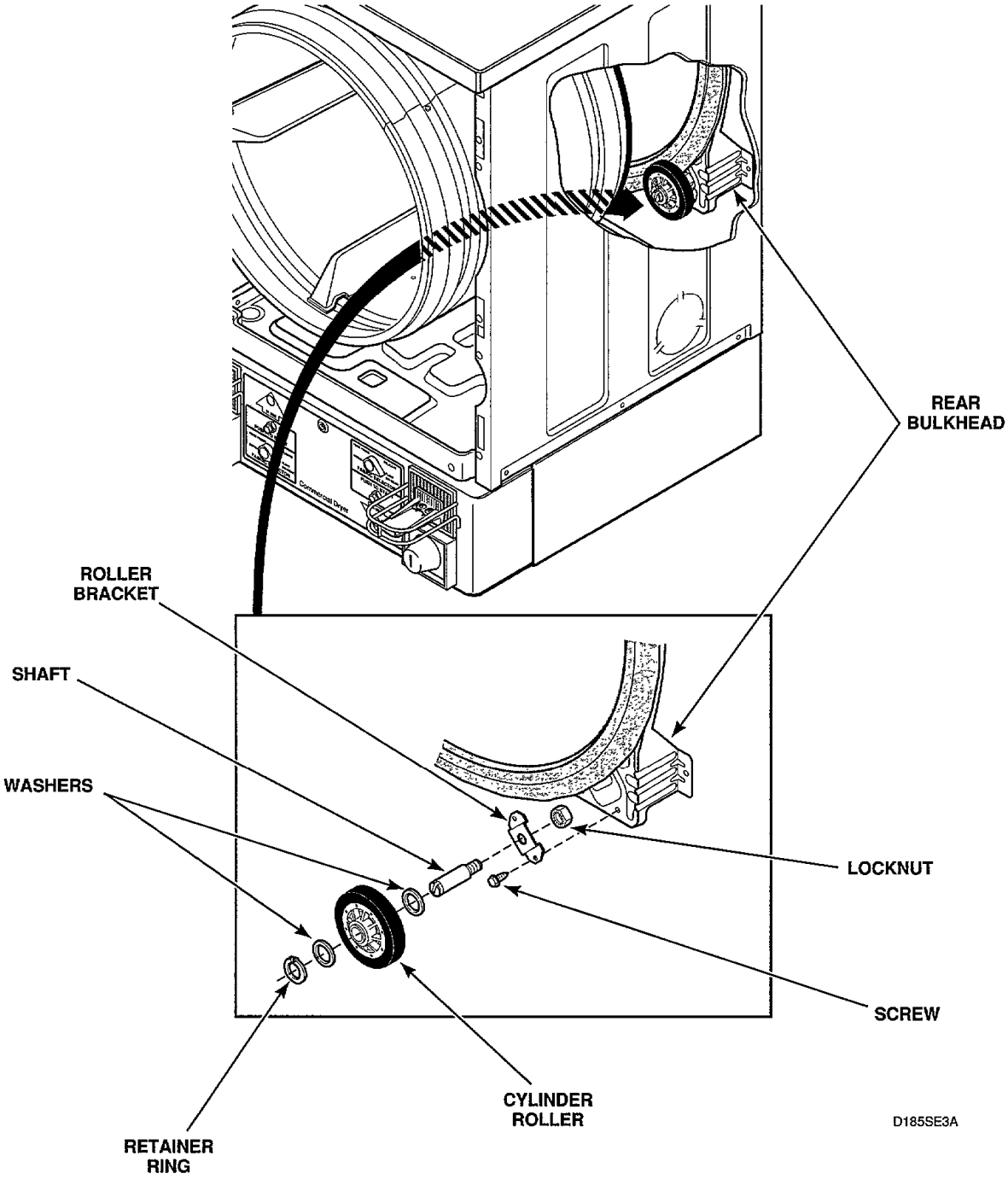

CYLINDER ROLLER

Figure 42

⚠WARNING

To reduce the risk of electrical shock, fire, explosion, serious injury or death:
- **Disconnect electric power to the dryer before servicing.**
- **Close gas shut-off valve to gas dryer before servicing.**
- **Never start the dryer with any guards/panels removed.**
- **Whenever ground wires are removed during servicing, these ground wires must be reconnected to ensure that the dryer is properly grounded.**

W001

34. REAR BULKHEAD AND HEATER BOX ASSEMBLIES

a. While supporting the lower access panel, remove two screws from bottom edge of lower front access panel, *Figure 9.*
b. Gently lower the access panel to disengage guide lugs from bottom edge of front panel.
c. Remove two screws holding bottom tabs on front panel to dryer cabinet, *Figure 10.* Swing bottom of front panel away from dryer to disengage hold-down clips (upper dryer) and guide lugs from control cabinet or cabinet top (depending on which dryer).
d. Disconnect wires from door switch, *Figure 11.*

NOTE: Refer to appropriate wiring diagram when rewiring switch.

e. Disengage belt from motor and idler pulleys, *Figure 33.*

NOTE: When installing belt, make sure belt is properly installed on motor and idler pulleys, and is on the correct side of the idler lever, *Figure 33.* Belt must be positioned around cylinder approximately three inches ahead of rear rib on cylinder, *Figure 40,* with the ribbed surface of the belt against cylinder. After installing belt, manually rotate cylinder counterclockwise to check that belt is properly aligned.

f. Remove four screws holding bulkhead to front flange of cabinet and lift complete bulkhead assembly out of slots in cabinet, *Figure 38.*

NOTE: When reassembling the front bulkhead to the cabinet, hold glides in position with finger tips on the edges of glides. Once bulkhead is in place, inspect the glide position with a mirror to ensure the glides are aligned with the cylinder, making sure the tabs are visible, *Figure 39.*

⚠WARNING

To reduce the risk of serious injury or death by carbon monoxide and other gases in gas dryers, carefully read and follow all instructions given in this section.

W005

IMPORTANT: During reinstallation of front bulkhead, make sure that air duct is properly positioned with the flange inside of the felt seal on the exhaust fan cover, *Figure 30.* If the seal is installed improperly, the airflow through the exhaust system will be restricted which can adversely affect dryer performance.

g. Loosen two cabinet top hold-down screw, *Figure 38.*
h. Manually rotate cylinder until one of the baffles is at the 6 o'clock position and carefully remove cylinder out through front of dryer.
i. **Gas models:**
   (1) Disconnect igniter wires at disconnect blocks, sensor wires from flame sensor terminals, and wires from gas valve coils at the quick disconnect blocks, *Figure 29.*

⚠WARNING

To reduce the risk of electrical shock, fire, explosion, serious injury or death:
- **Disconnect electric power to the dryer before servicing.**
- **Close gas shut-off valve to gas dryer before servicing.**
- **Never start the dryer with any guards/panels removed.**
- **Whenever ground wires are removed during servicing, these ground wires must be reconnected to ensure that the dryer is properly grounded.**

W001

(2) Remove screw from right side of burner housing, holding burner tube in place, *Figure 29.*
(3) Gently move burner tube toward rear of dryer to disengage tab, *Figure 27,* from slot on left side of burner housing.
(4) Carefully rotate burner tube and igniter **counterclockwise** so tab is at 8 o'clock position.
(5) Move air shutter end of burner tube slightly to right and CAREFULLY remove burner tube and igniter assembly out through front of dryer.

IMPORTANT: The igniter is very fragile. Be careful not to damage it during removal.

(6) Remove screw holding burner housing to heat shroud, *Figure 27.*
(7) Remove screw holding front of burner housing to dryer base and remove housing out through front of dryer, *Figure 29.*
(8) Remove four screws holding shroud to heater box, *Figure 27,* and remove shroud out through front of dryer.

j. **Electric models:**
Remove two screws holding element and plate to heater box, then pull element down and away from heater box, *Figure 29.*
k. Remove screw holding heat shield to dryer base, *Figure 41.*
l. While supporting bulkhead, remove the four screws holding rear bulkhead to dryer cabinet, *Figure 41,* then lift complete assembly out of dryer.
m. Remove two screws holding heat shield to heater box, *Figure 41.*
n. To remove heater box from rear bulkhead, refer to *Figure 43.*

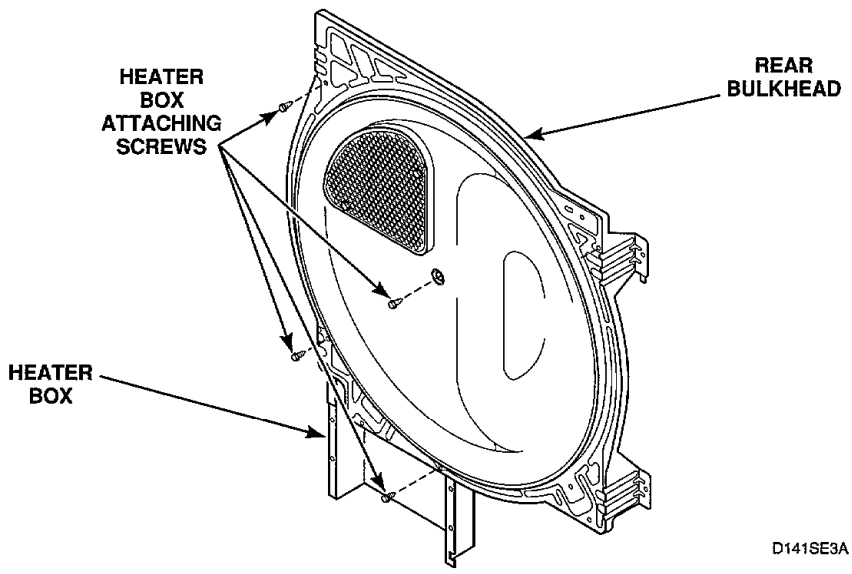

Figure 43

⚠WARNING

To reduce the risk of electrical shock, fire, explosion, serious injury or death:
- **Disconnect electric power to the dryer before servicing.**
- **Close gas shut-off valve to gas dryer before servicing.**
- **Never start the dryer with any guards/panels removed.**
- **Whenever ground wires are removed during servicing, these ground wires must be reconnected to ensure that the dryer is properly grounded.**

W001

35. TERMINAL BLOCK OR POWER CORD

a. **Terminal block – Electric models:**
(1) While supporting the lower access panel, remove two screws from bottom edge of lower front access panel, *Figure 9.*
(2) Gently lower the access panel to disengage guide lugs from bottom edge of front panel.
(3) Remove two screws holding bottom tabs on front panel to dryer cabinet, *Figure 10.* Swing bottom of front panel away from dryer to disengage hold-down clips (upper dryer) and guide lugs from control cabinet or cabinet top (depending on which dryer).
(4) Disconnect wires from door switch, *Figure 11.*

NOTE: Refer to appropriate wiring diagram when rewiring switch.

(5) Remove two cabinet top hold-down screws, *Figure 15.*
(6) Lift cabinet top to a vertical position by hinging it on the rear hold-down brackets, *Figure 16.*

NOTE: When servicing, cabinet top may be raised and hinged on the rear hold-down brackets, or supported against wall behind the dryer.

(7) Remove all wires from terminal block. (Refer to appropriate wiring diagram when rewiring terminal block.)
(8) Remove screw holding terminal block to rear bulkhead, *Figure 44.*

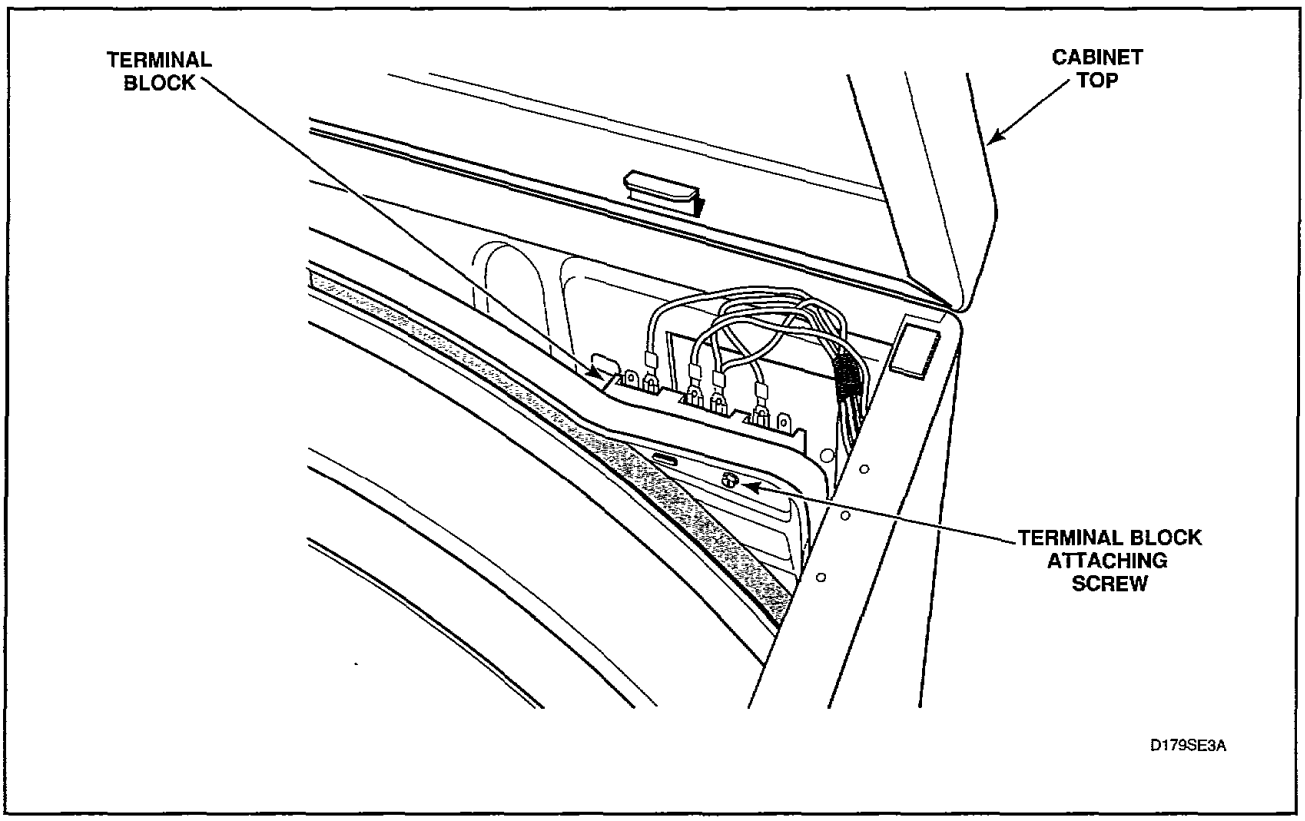

Figure 44

⚠WARNING

To reduce the risk of electrical shock, fire, explosion, serious injury or death:
- **Disconnect electric power to the dryer before servicing.**
- **Close gas shut-off valve to gas dryer before servicing.**
- **Never start the dryer with any guards/panels removed.**
- **Whenever ground wires are removed during servicing, these ground wires must be reconnected to ensure that the dryer is properly grounded.**

W001

b. **Power Cord – Gas models:**
(1) Remove access plate on rear of cabinet.
(2) Remove strain relief.
(3) Remove screw holding power cord ground wire to rear bulkhead, *Figure 45.*

NOITE: Reinstall screw and ground wires into same hole in bulkhead when reinstalling power cord.

(4) Disconnect molex plug and remove power cord from rear of dryer cabinet.

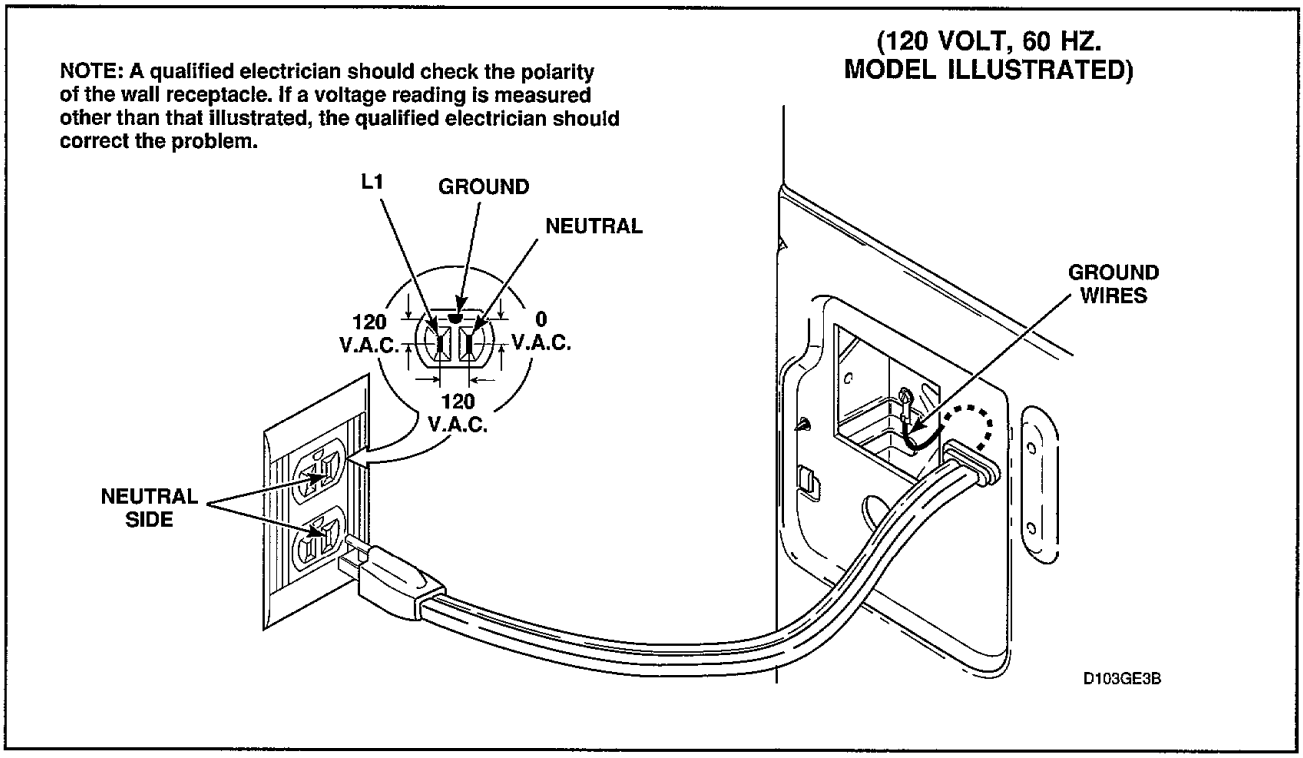

Figure 45

⚠WARNING

To reduce the risk of electrical shock, fire, explosion, serious injury or death:
- **Disconnect electric power to the dryer before servicing.**
- **Close gas shut-off valve to gas dryer before servicing.**
- **Never start the dryer with any guards/panels removed.**
- **Whenever ground wires are removed during servicing, these ground wires must be reconnected to ensure that the dryer is properly grounded.**

W001

36. CABINET AND BASE

a. While supporting the lower access panel, remove two screws from bottom edge of lower front access panel, *Figure 9.*
b. Gently lower the access panel to disengage guide lugs from bottom edge of front panel.
c. Remove two screws holding bottom tabs on front panel to dryer cabinet, *Figure 10.* Swing bottom of front panel away from dryer to disengage hold-down clips (upper dryer) and guide lugs from control cabinet or cabinet top (depending on which dryer).
d. Disconnect wires from door switch, *Figure 11.*

NOTE: Refer to appropriate wiring diagram when rewiring switch.

e. UPPER DRYER — Remove two cabinet top hold-down screws, *Figure 15* and carefully lift top off dryer.
f. Disengage belt from motor and idler pulleys, *Figure 33.*

NOTE: When reinstalling belt, make sure belt is properly installed on motor and idler pulleys and is on the correct side of the idler lever, *Figure 32.* Belt must be positioned around cylinder approximately three inches ahead of rear rib on cylinder, *Figure 40,* with the ribbed surface of the belt against cylinder. After installing belt, manually rotate cylinder counterclockwise to check that belt is properly aligned.

g. Remove four screws holding bulkhead to front flange of cabinet. Then lift complete bulkhead assembly out of slots in cabinet, *Figure 38.*

NOTE: When reassembling the front bulkhead to the cabinet, hold glides in position with finger tips on the edges of glides. Once bulkhead is in place, inspect the glide position with a mirror to ensure the glides are aligned with the cylinder, making sure the tabs are visible, *Figure 39.*

⚠WARNING

To reduce the risk of serious injury or death by carbon monoxide and other gases in gas dryers, carefully read and follow all instructions given in this section.

W005

IMPORTANT: During reinstallation of front bulkhead, make sure that air duct is properly positioned with the flange inside the felt seal on exhaust fan cover, *Figure 32.* If the seal is installed improperly, the airflow through the exhaust system will be restricted which can adversely affect dryer performance.

h. Manually rotate cylinder until one of the baffles is at the 6 o'clock position and carefully remove cylinder out through front of dryer.
i. Disconnect wires from thermostat and heater, *Figure 32.*

NOTE: Refer to appropriate wiring diagram when rewiring thermostat and heater.

j. Disengage motor wire harness connection block from motor switch by pressing in on the movable locking tabs (located on each end of the connection block) and pulling away from motor, *Figure 36.*

IMPORTANT: To avoid an open circuit, DO NOT pull on the connection block wires when removing blocks from motor as this could damage the wires or terminal crimping.

Before attaching wire harness connection block to motor, make sure all the male terminals on motor are straight and are capable of accepting the terminals from the wire harness connection block.

k. Remove two screws holding motor mounting bracket to dryer base, *Figure 32.*
l. Pull motor and exhaust assembly forward and disengage the middle exhaust duct.
m. Rotate the motor and exhaust assembly 90° **counterclockwise** and slide out through front of dryer.

IMPORTANT: When reinstalling motor and exhaust assembly, make sure wire harness on right side is clipped to motor mounting bracket and is routed along dryer base (between motor mounting bracket and right side of cabinet), *Figure 32.* Tab on rear of motor mounting bracket must be slid into slot in dryer base. Make sure the belt has been installed on the correct side of the idler lever, *Figure 33.*

⚠WARNING

To reduce the risk of electrical shock, fire, explosion, serious injury or death:
- **Disconnect electric power to the dryer before servicing.**
- **Close gas shut-off valve to gas dryer before servicing.**
- **Never start the dryer with any guards/panels removed.**
- **Whenever ground wires are removed during servicing, these ground wires must be reconnected to ensure that the dryer is properly grounded.**

W001

n **Gas models:**
(1) Disconnect igniter wires at disconnect blocks, sensor wires from flame sensor terminals and wires from gas valve coils at the quick disconnect blocks, *Figure 29.*
(2) Remove screw from right side of burner housing, holding burner tube in place, *Figure 29.*
(3) Gently move burner tube toward rear of dryer to disengage tab, Figure 27, from slot on left side of burner housing.
(4) Carefully rotate burner tube and igniter **counterclockwise** so tab is at 8 o'clock position.
(5) Move air shutter end of burner tube slightly to the right and CAREFULLY remove burner tube and igniter assembly out through front of dryer.

IMPORTANT: The igniter is very fragile. Be careful not to damage it during removal.

(6) Remove screw holding front of burner housing to heat shroud, *Figure 27.*
(7) Remove screw holding front of burner housing to dryer base and remove housing out through front of dryer, *Figure 27.*
(8) Remove four screws holding shroud to heater box, *Figure 27,* and remove shroud out through front of dryer.

Electric models:
(1) Remove two screws holding element and plate to heater box, then pull element down and away from heater box, *Figure 29.*
(2) Pull element and plate out of dryer far enough to disconnect wires from element.

IMPORTANT: Refer to appropriate wiring diagram when rewiring element and plate.

o. Remove screw holding heat shield to dryer base, *Figure 41.*
p. While supporting rear bulkhead, remove screws holding bulkhead to rear of dryer cabinet, and remove assembly out of dryer, *Figure 41.*
q. Remove screw holding exhaust duct to dryer cabinet and pull duct out of cabinet, *Figure 41.*
r. **UPPER DRYER —** Remove two screws from each rear hinge and remove hinges.
s. Remove screw holding terminal block access plate to rear of dryer cabinet and remove plate.
t. Remove wire harness clips.
u. Remove guide lugs and screws.
v. Remove two screws from front edge at each side of cabinet, *Figure 38.* Then remove remaining screws from around bottom of cabinet and lift cabinet off base.
w. Remove leveling legs from base.

SECTION III
Adjustments

⚠WARNING

To reduce the risk of electrical shock, fire, explosion, serious injury or death:
- **Disconnect electric power to the dryer before servicing.**
- **Close gas shut-off valve to gas dryer before servicing.**
- **Never start the dryer with any guards/panels removed.**
- **Whenever ground wires are removed during servicing, these ground wires must be reconnected to ensure that the dryer is properly grounded.**

W001

37. LEVELING LEGS *(Figure 46)*

NOTE: Dryer should be installed on a solid and level floor. DO NOT install the dryer on a weak or spongy floor.

a. Place dryer in position, adjust the legs until dryer is level.

NOTE: Legs can be adjusted outside the dryer by using a 1-1/4 inch size wrench, or from inside the dryer (with lower front access panel removed) by using a 1/4 inch drive ratchet with extension through center hole in leg.

b. Keep dryer as close to the floor as possible. All four legs must rest firmly on the floor so weight of the dryer is evenly distributed. The dryer MUST NOT rock.

c. Place a rubber cup (supplied with dryer) under each of the leveling legs, *Figure 46.*

IMPORTANT: DO NOT move the dryer at any time unless the dryer is completely assembled. DO NOT slide the dryer across the floor once the leveling legs have been extended as the legs and base could become damaged.

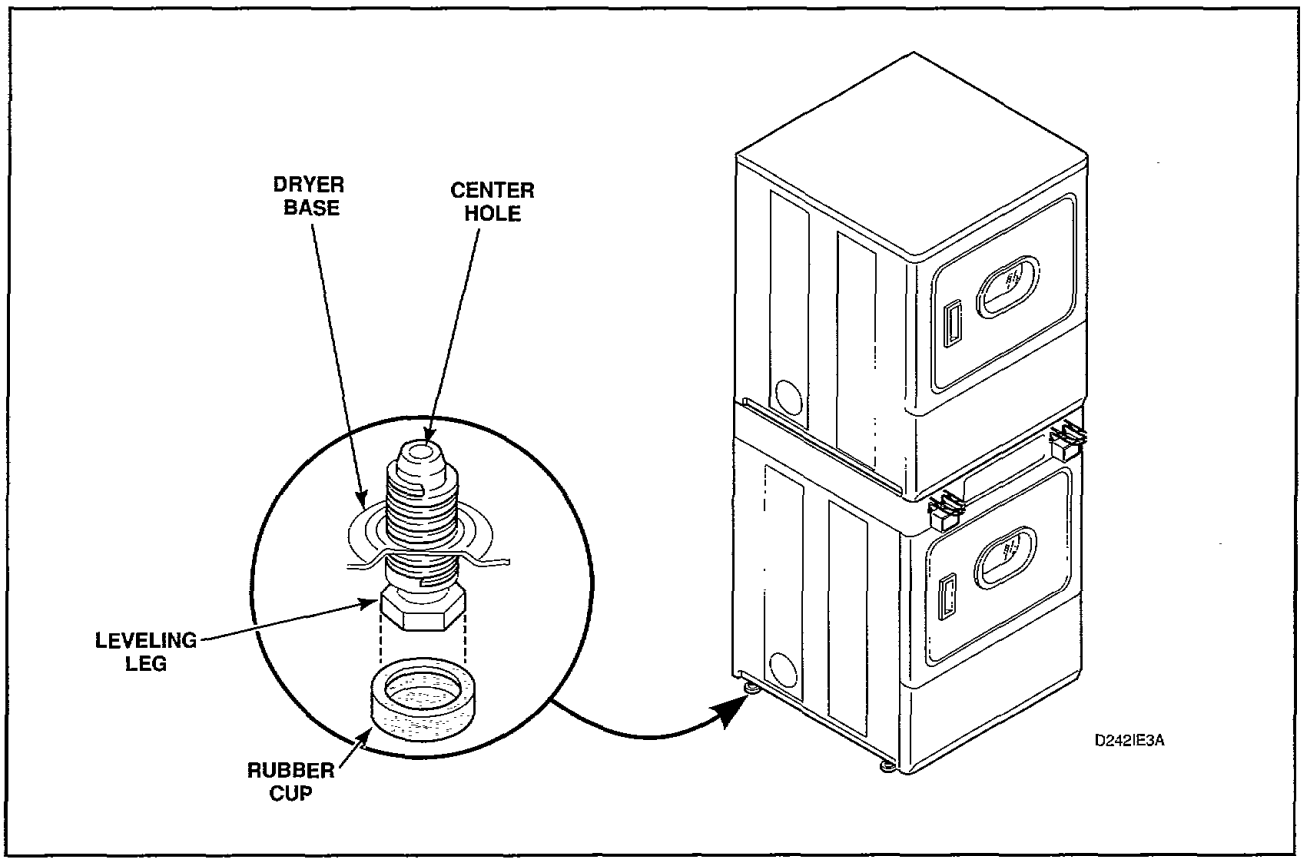

Figure 46

⚠WARNING

To reduce the risk of electrical shock, fire, explosion, serious injury or death:
- **Disconnect electric power to the dryer before servicing.**
- **Close gas shut-off valve to gas dryer before servicing.**
- **Never start the dryer with any guards/panels removed.**
- **Whenever ground wires are removed during servicing, these ground wires must be reconnected to ensure that the dryer is properly grounded.**

W001

38. BURNER FLAME (Gas Models)

a. While supporting the lower access panel, remove two screws from bottom edge of lower front access panel, *Figure 9.*
b. Gently lower the access panel to disengage guide lugs from bottom edge of front panel.
c. Set temperature switch at NORMAL.
   - Metered Models – Place coins in slide and carefully push slide in as far as possible
   - Nonmetered Models – set timer at "50" minutes.
d. Close the loading door, start the dryer in a heat setting (refer to Operating Instructions supplied with the dryer); the dryer will start, the igniter will glow red and the main burner will ignite.
e. Allow the dryer to operate for approximately five minutes, then loosen the air shutter lockscrew, *Figure 47.*
f. Turn air shutter to the left to get a luminous yellow-tipped flame, then turn it back slowly to the right to obtain a steady blue flame.
g. After proper flame is obtained, tighten air shutter lockscrew firmly, *Figure 47.*
h. Reinstall lower front access panel and screws.

⚠WARNING

To reduce the risk of fire and serious injury or death, the lower front access panel must be in place during normal operation.

After the dryer has operated for approximately three minutes, exhaust air or exhaust pipe should be warm.

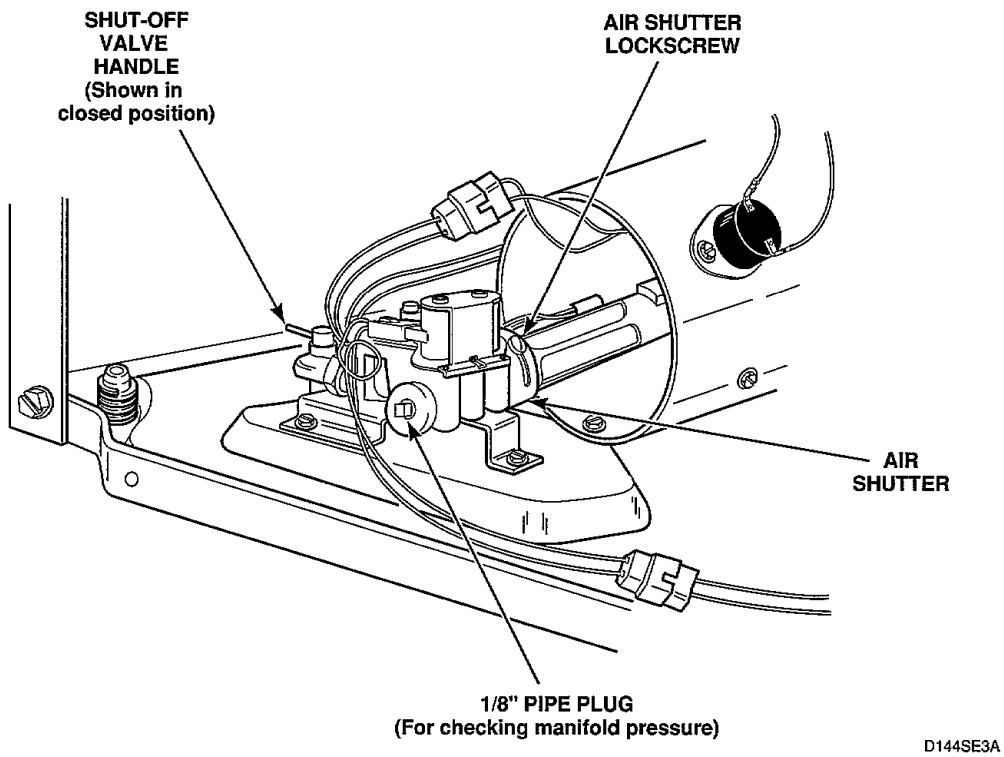

Figure 47

SECTION IV
Test Procedures

⚠WARNING

To reduce the risk of electrical shock, fire, explosion, serious injury or death:
- **Disconnect electric power to the dryer before servicing.**
- **Close gas shut-off valve to gas dryer before servicing.**
- **Never start the dryer with any guards/panels removed.**
- **Whenever ground wires are removed during servicing, these ground wires must be reconnected to ensure that the dryer is properly grounded.**

W001

IMPORTANT: Electrical test procedures in this service manual are performed by using a Volt-Ohm meter. Test can also be performed using a multi-meter or any other electrical testing equipment with which the service person is familiar.

39. DRIVE MOTOR ***(Figure 48)***

a. Remove motor and exhaust assembly, *paragraph 25.*
b. Disconnect motor wire harness at motor connection block.

NOTE: Refer to appropriate wiring diagram when rewiring motor switch.

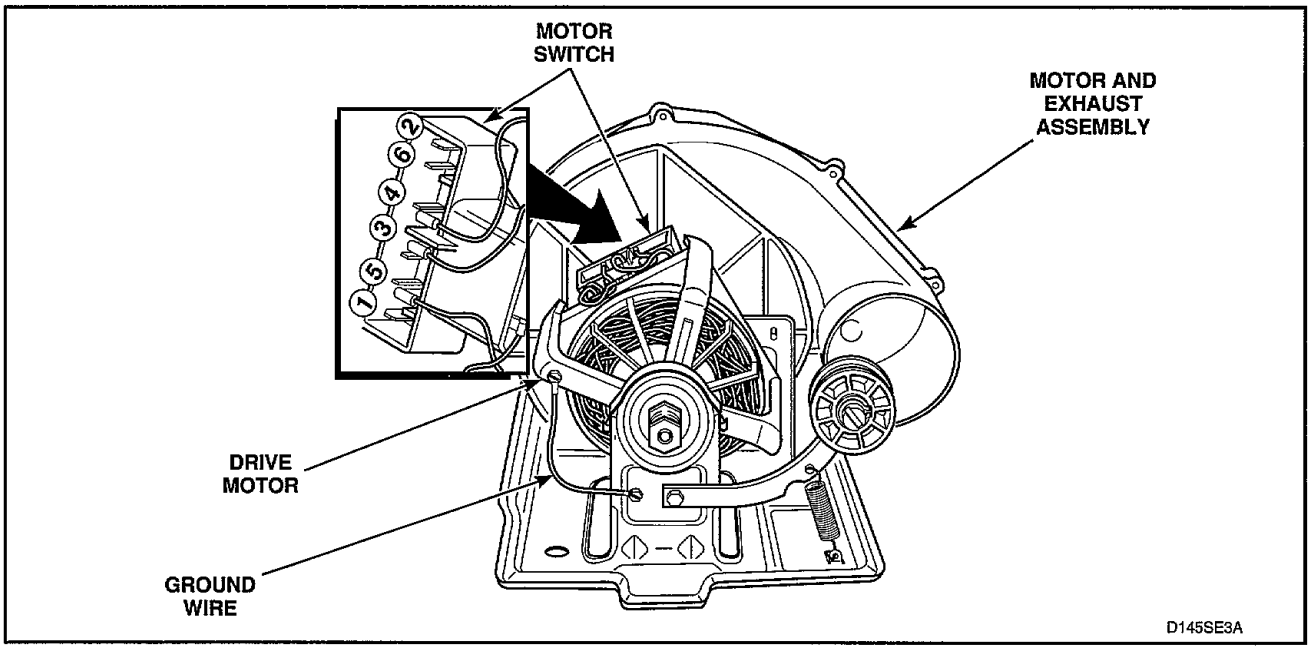

Figure 48

⚠WARNING

To reduce the risk of electrical shock, fire, explosion, serious injury or death:

- **Disconnect electric power to the dryer before servicing.**
- **Close gas shut-off valve to gas dryer before servicing.**
- **Never start the dryer with any guards/panels removed.**
- **Whenever ground wires are removed during servicing, these ground wires must be reconnected to ensure that the dryer is properly grounded.**

W001

c. **Emerson Motor Switch** (Refer to SECTION VI for Internal Wiring of the Dryer Motor Swtich.)

⚠WARNING

Disconnect electric power to dryer before performing any of the following steps or replacing inoperative motor switch.

Unplug motor connection block before starting this test

START TERMINALS

NOTE: Disconnect yellow wire from motor switch before testing start terminals.

A. Continuity exists between switch terminal 5 and black wire.

NO → **Inoperative start switch. Replace switch.**

YES

B. Manually depress actuator. Continuity broken between switch terminal 5 and black wire.

NO → **Inoperative start switch. Replace switch.**

YES

RUN TERMINALS

NOTE: Reconnect yellow wire to motor switch before testing run terminals.

C. Continuity broken between switch terminal 6 and yellow wire.

NO → **Inoperative start switch. Replace switch.**

YES

D. Manually depress actuator. Continuity exists between switch terminal 6 and yellow wire.

NO → **Inoperative start switch. Replace switch.**

YES

HEATER CIRCUIT TERMINALS

E. Continuity broken between switch terminal 1 and switch terminal 2.

NO → **Inoperative start switch. Replace switch.**

YES

F. Manually depress actuator. Continuity exists between switch terminal 1 and switch terminal 2.

NO → **Inoperative start switch. Replace switch.**

YES

Motor switch checks OK.

⚠WARNING

To reduce the risk of electrical shock, fire, explosion, serious injury or death:

- **Disconnect electric power to the dryer before servicing.**
- **Close gas shut-off valve to gas dryer before servicing.**
- **Never start the dryer with any guards/panels removed.**
- **Whenever ground wires are removed during servicing, these ground wires must be reconnected to ensure that the dryer is properly grounded.**

W001

d. **Emerson Motor Windings.** (Refer to SECTION VI for Internal Wiring of the Dryer Motor Switch.)

⚠WARNING

Disconnect electric power to dryer before performing any of the following steps or replacing inoperative motor.

START WINDING	G. 1-2 Ohms between black wire and orange wire.	NO	Inoperative run winding. Replace motor.
	YES		
RUN WINDING	H. 1-2 Ohms between yellow wire and orange wire.	NO	Inoperative run winding. Replace motor.
	YES		
PROTECTOR	I. Continuity exists between orange wire and brown wire.	NO	Inoperative run winding. Replace motor.
	YES		
	All motor windings check OK.		

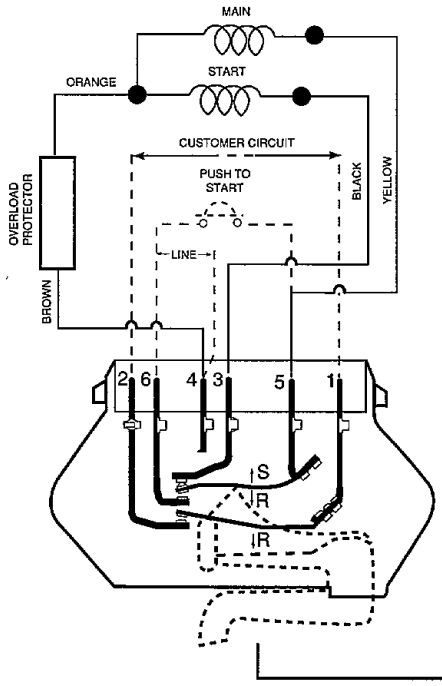

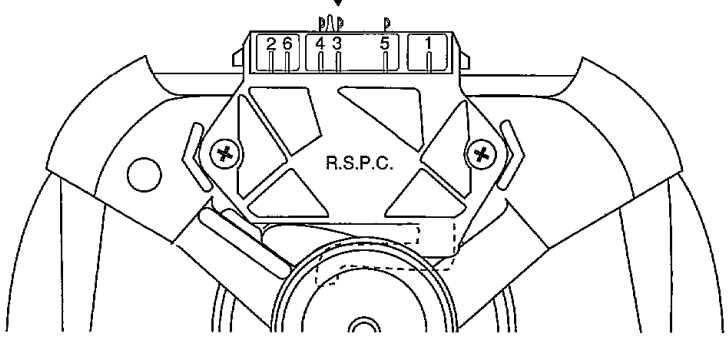

SWITCH SHOWN IN START POSITION

D166SE3B

⚠WARNING

To reduce the risk of electrical shock, fire, explosion, serious injury or death:

- **Disconnect electric power to the dryer before servicing.**
- **Close gas shut-off valve to gas dryer before servicing.**
- **Never start the dryer with any guards/panels removed.**
- **Whenever ground wires are removed during servicing, these ground wires must be reconnected to ensure that the dryer is properly grounded.**

W001

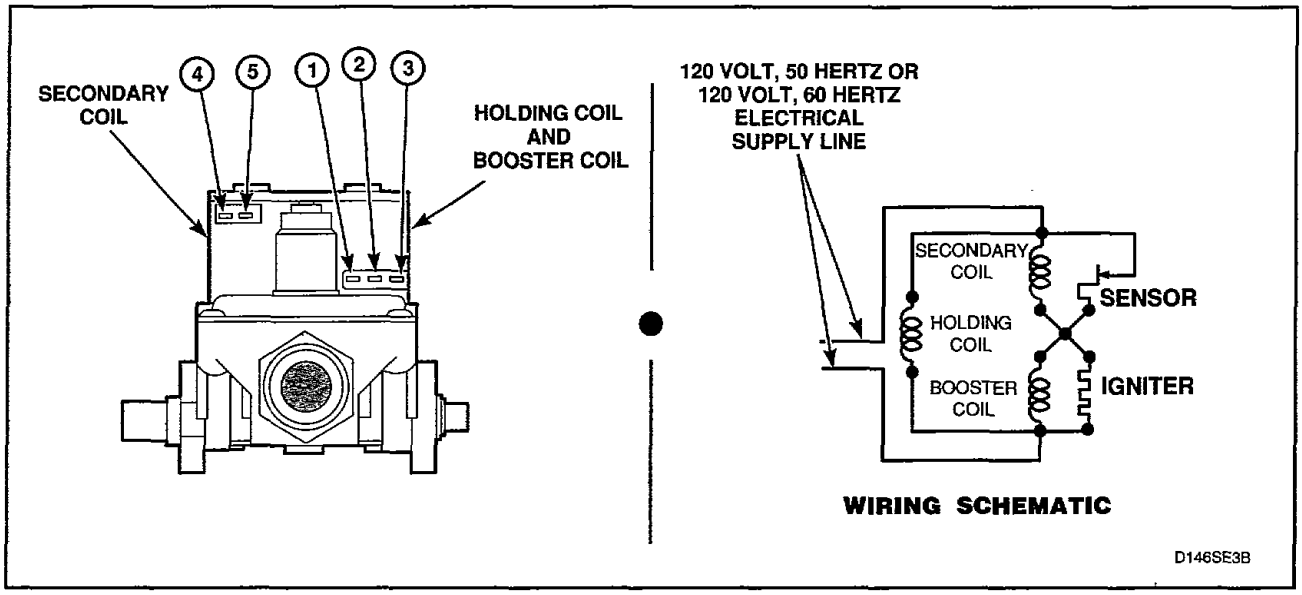

Figure 49

40. BURNER SYSTEM OPERATION (Gas Models - *Figure 49*)

Components

This burner has four basic components: A silicon carbide (glow bar) igniter, burner tube, flame sensor, and a two-stage gas valve consisting of a split-coil valve and a secondary coil valve. The split-coil valve is opened when the dryer thermostat calls for heat, while the secondary valve does not open until the igniter has attained ignition temperature.

Pre-Ignition Circuits

When the dryer thermostat calls for heat, circuits are completed through the holding coil, flame sensor, booster coil and igniter. Both coils must be energized to open split-coil valve. Once opened, the holding coil can hold the valve open without assistance from the booster coil. The current shunted around the secondary coil by the flame sensor, passes through the igniter causing it to get hot.

Burner Circuit

In approximately 30 seconds, the igniter attains ignition temperature and the flame sensor (located on burner housing beside the igniter) contacts open. A circuit is then completed through the secondary valve coil, opening the valve and allowing gas to flow. Ignition is made and the heat from the burner flame causes the flame sensor contacts to remain open.

41. IGNITION SYSTEM FEATURES (Gas Models - *Figure 49*)

MOMENTARY POWER INTERRUPTION: Upon resumption of power, flame sensor contacts will still be open, permitting secondary valve to open. However, with the secondary coil in the circuit, the booster coil cannot draw enough current to open the split-coil valve. When flame sensor contacts do reclose, the secondary valve will close, and the burner system will be in the normal pre-ignition circuit.

FLAME FAILURE: In case of flame failure, the flame sensor contacts will reclose in about 45 seconds. This will close the secondary valve and the burner system will be in the normal pre-ignition circuit.

IGNITION FAILURE: If flame is not established as flame sensor contacts open, secondary valve will remain open until flame sensor contacts reclose. Flame sensor will continue to recycle the igniter and secondary valve (about once per minute) until ignition is made or dryer is turned off.

⚠WARNING

To reduce the risk of electrical shock, fire, explosion, serious injury or death:

- **Disconnect electric power to the dryer before servicing.**
- **Close gas shut-off valve to gas dryer before servicing.**
- **Never start the dryer with any guards/panels removed.**
- **Whenever ground wires are removed during servicing, these ground wires must be reconnected to ensure that the dryer is properly grounded.**

W001

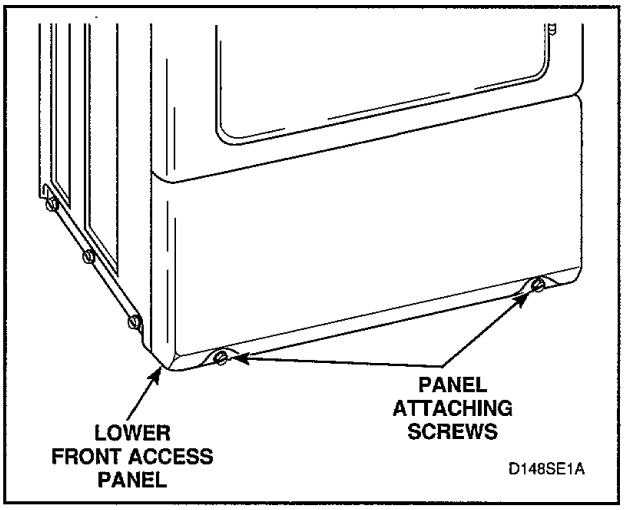

Figure 50

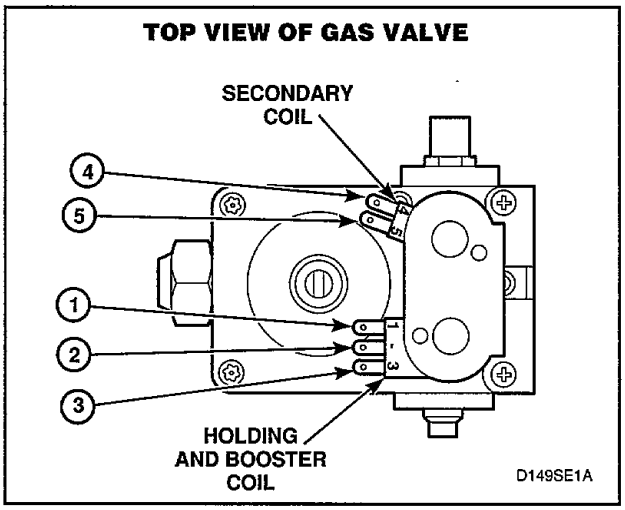

Figure 51

42. ELECTRICAL CIRCUIT TO IGNITION SYSTEM (Gas Models)

a. While supporting the lower access panel, remove two screws from bottom edge of lower front access panel, *Figure 50.*
b. Gently lower the access panel to disengage guide lugs from bottom edge of front panel.
c. Close gas shut-off valve, *Figure 47.*
d. Remove valve wire harness disconnect block from the holding and booster coil, *Figure 49.*
e. Plug dryer power cord into wall receptacle, start the dryer in a heat setting (refer to the Operating Instructions supplied with dryer).
f. Set test meter to read AC voltage and apply meter probes into terminals on the dryer harness that would correspond to terminals "1" and "2" on the coil, *Figure 49.* Meter should register line voltage in all temperature settings, except FLUFF which should read "zero" VAC.
g. If meter does not read line voltage in step "f", check motor switch, thermostat, temperature switch, accumulator, or timer.

43. GAS VALVE COILS (Gas Models)

a. While supporting the lower access panel, remove two screws from bottom edge of lower front access panel, *Figure 50.*
b. Gently lower the access panel to disengage guide lugs from bottom edge of front panel.
c. Close gas shut-off valve, *Figure 47.*
d. Remove disconnect blocks from gas valve coils, *Figure 49.*
e. Set test meter to read OHMS and put meter probes to terminals as follows:
   (1) **Holding Coil** *(see Figure 51)*
   Terminals 1 and 2 - Meter should read 1700 ± 75 Ohms.
   (2) **Booster Coil** *(see Figure 51)*
   Terminals 1 and 3 - Meter should read 750 ± 35 Ohms.
   (3) **Secondary Coil** *(see Figure 51)*
   Terminals 4 and 5 - Meter should read 1650 ± 75 Ohms.

NOTE: If meter registers any reading other than that listed above, the respective coil should be replaced.

⚠WARNING

To reduce the risk of electrical shock, fire, explosion, serious injury or death:

- **Disconnect electric power to the dryer before servicing.**
- **Close gas shut-off valve to gas dryer before servicing.**
- **Never start the dryer with any guards/panels removed.**
- **Whenever ground wires are removed during servicing, these ground wires must be reconnected to ensure that the dryer is properly grounded.**

W001

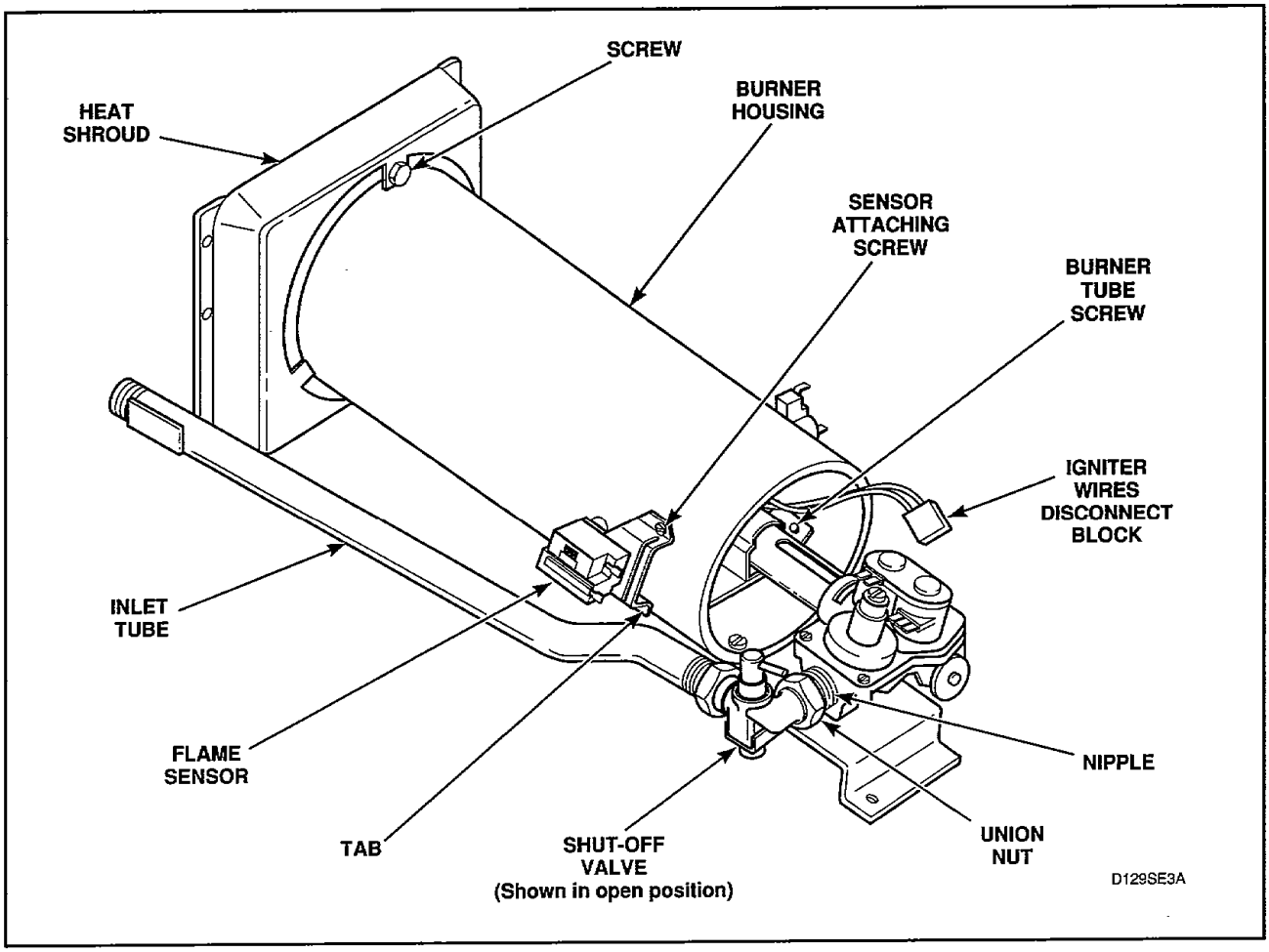

Figure 52

44. SENSOR (Gas Models)

a. While supporting the lower access panel, remove two screws from bottom edge of lower front access panel, *Figure 50.*
b. Gently lower the access panel to disengage guide lugs from bottom edge of front panel.
c. Close gas shut-off valve, *Figure 52.*
d. Remove wires from sensor terminals, *Figure 52.*
e. Set test meter to read OHMS and put meter probes on sensor terminals. Meter should read "zero" Ohms. If meter registers an Ohm reading of any amount, replace sensor.

⚠WARNING

To reduce the risk of electrical shock, fire, explosion, serious injury or death:
- **Disconnect electric power to the dryer before servicing.**
- **Close gas shut-off valve to gas dryer before servicing.**
- **Never start the dryer with any guards/panels removed.**
- **Whenever ground wires are removed during servicing, these ground wires must be reconnected to ensure that the dryer is properly grounded.**

W001

45. IGNITER (Gas Models)

a. While supporting the lower access panel, remove two screws from bottom edge of lower front access panel, *Figure 50.*
b. Gently lower the access panel to disengage guide lugs from bottom edge of front panel.
c. Close gas shut-off valve, *Figure 52.*
d. Disconnect igniter wires at disconnect block, *Figure 52.*
e. Set test meter to read OHMS and put meter probes on terminals of igniter wires.
f. Meter should register a reading of at least 75 to 800 Ohms. If meter does not read between 75 to 800 Ohms, replace the igniter.

IMPORTANT: Always examine all wires, terminals and connectors to be sure wiring is proper before replacing any components.

NOTE: Test procedures in *paragraph 43, 44 and 45* can be performed on workbench if gas valve, igniter, burner tube and burner housing have been removed from dryer.

46. DOOR SWITCH

a. While supporting the lower access panel, remove two screws from bottom edge of lower front access panel, *Figure 50.*
b. Gently lower the access panel to disengage guide lugs from bottom edge of front panel.
c. Remove two screws holding bottom tabs on front panel to dryer cabinet, *Figure 10.* Swing bottom of front panel away from dryer to disengage hold-down clips (upper dryer) and guide lugs from control cabinet or cabinet top (depending on which dryer).
d. Disconnect wires from door switch, *Figure 11.*

NOTE: Refer to appropriate wiring diagram when rewiring switch.

e. Set meter or read Ohms and apply meter probes on switch terminals 1 and 3 with door closed. You should get "zero" reading.
f. Apply probes to terminals 1 and 2 with door closed. The meter should read "infinite".
g. Open door. Meter should read "infinite" between 1 and 3 and "zero" between 1 and 2.

47. PUSH-TO-START SWITCH

a. Unlock control panel, *Figure 6, Step 1.*
b. Pull top of control panel away from control cabinet far enough to allow lifting the control panel up and off the rail support of the control cabinet, *Figure 6, Step 2* Remove control panel away from control cabinet, *Figure 6, Step 3.*
c. Unplug dryer from electrical supply and disconnect wires from switch terminals.
d. Set Volt-Ohm meter on OHMS scale and calibrate at appropriate scale.
e. Place meter probes on switch terminals. You should see an "infinite" reading on the meter.
f. With probes attached to switch, press the start switch button. You should read "0" Ohms.

⚠WARNING

To reduce the risk of electrical shock, fire, explosion, serious injury or death:
- **Disconnect electric power to the dryer before servicing.**
- **Close gas shut-off valve to gas dryer before servicing.**
- **Never start the dryer with any guards/panels removed.**
- **Whenever ground wires are removed during servicing, these ground wires must be reconnected to ensure that the dryer is properly grounded.**

W001

48. TEMPERATURE SWITCH

a. Unlock control panel, *Figure 6, Step 1.*
b. Pull top of control panel away from control cabinet far enough to allow lifting the control panel up and off the rail support of the control cabinet, *Figure 6, Step 2.* Remove control panel away from control cabinet, *Figure 6, Step 3.*
c. Disconnect all wires from temperature switch.

NOTE: Refer to appropriate wiring diagram when rewiring switch.

d. Set test meter to read OHMS and apply meter leads to terminals:

L1 and 2 } "zero" reading in NORMAL

L1 and 2 } "zero" reading in PERMANENT PRESS

L1 and 1, L1 and 2 } "zero" reading in DELICATE

Meter should give "no reading" from L1 to 1 and from L1 to 2 in FLUFF.

49. TIMER CONTACTS (Nonmetered Models)

a. Remove screws holding timer knob to timer shaft, *Figure 7.*
b. Remove four screws holding timer and plate to control cabinet, *Figure 7.*
c. Remove timer plate and timer out of control cabinet as far as wires will permit, *Figure 7.*
d. Disconnect wires from timer, *Figure 53,* except timer motor wires.

NOTE: Refer to appropriate wiring diagram when rewiring timer.

e. Manually rotate timer out of "OFF" position and into cycle.

f. Set test meter to read OHMS. The following readings should be found:
(1) Motor circuit test - L1 and M = "zero" Ohms (closed)
(2) Heat circuit test - L1 and H = "zero" Ohms (closed)
(3) Timer motor test - L1 and N = approximately 1100 Ohms or apply live power to timer motor terminals and motor should run.

NOTE: Timer Motor Resistance
120 Volt, 60 Hz. 2,460 - 3,100 Ohms
240 Volt, 50 Hz. 10,900 - 13,300 Ohms

g. Rotate timer to "cooldown" (5 minutes before "OFF"). "Infinite" (open) reading should be found between L1 and H.
h. Rotate timer to "OFF" position. "Infinite" (open) reading should be found between L1 and M and between L1 and H.

NOTE: Timer motor power is supplied through the "M" terminal.

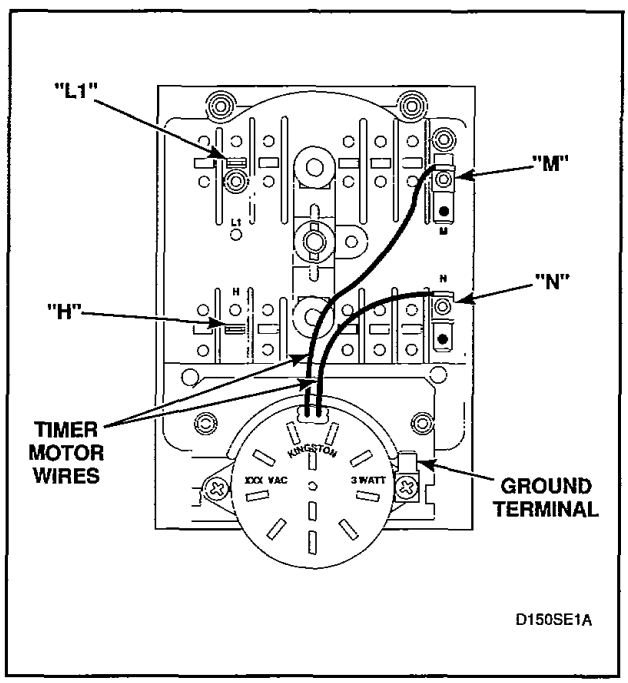

Figure 53

⚠WARNING

To reduce the risk of electrical shock, fire, explosion, serious injury or death:
- **Disconnect electric power to the dryer before servicing.**
- **Close gas shut-off valve to gas dryer before servicing.**
- **Never start the dryer with any guards/panels removed.**
- **Whenever ground wires are removed during servicing, these ground wires must be reconnected to ensure that the dryer is properly grounded.**

W001

50. ACCUMULATOR AND TIMING MOTOR (Metered Models - *Figure 54*)

a. Unlock control panel, *Figure 6, Step 1.*
b. Pull top of control panel away from control cabinet far enough to allow lifting the control panel up and off the rail support of the control cabinet, *Figure 6, Step 2* Remove control panel away from control cabinet, *Figure 6, Step 3.*
c. Remove wires from one side of each switch.

NOTE: Refer to appropriate wiring diagram when rewiring switches.

d. Manually advance timing cam to disengage it from ratchet wheel.
e. Set meter to read OHMS and apply leads on terminals of each switch. You should read the following:
   Switch A - "zero" Ohms (closed)
   Switch B - "zero" Ohms (closed)
   Switch C (if present) - "infinite" (open)
f. Manually advance timing cam until it engages with ratchet wheel and the first "click" is heard. Switch B should now read "infinite" (open).
g. Continue to rotate timing cam until second "click" is heard. Switch B should remain open. Switch A should read "infinite" (open) and Switch C (if present) should read "zero" Ohms (closed).
h. **Timing motor**
   Apply live power to timing motor leads. Timing motor should advance timing cam.

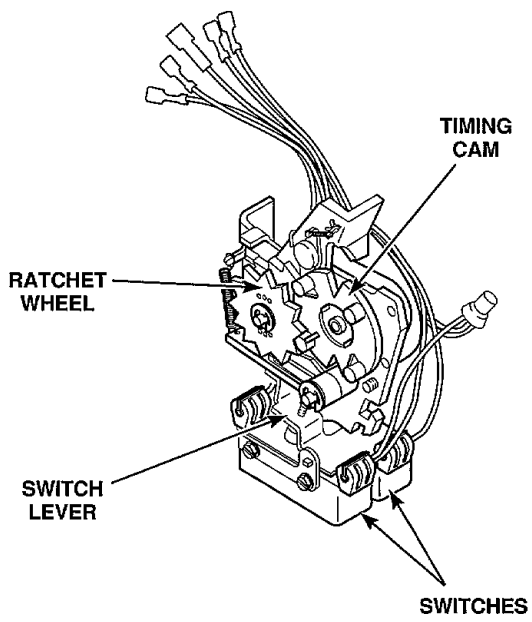

TWO SWITCH ACCUMULATOR

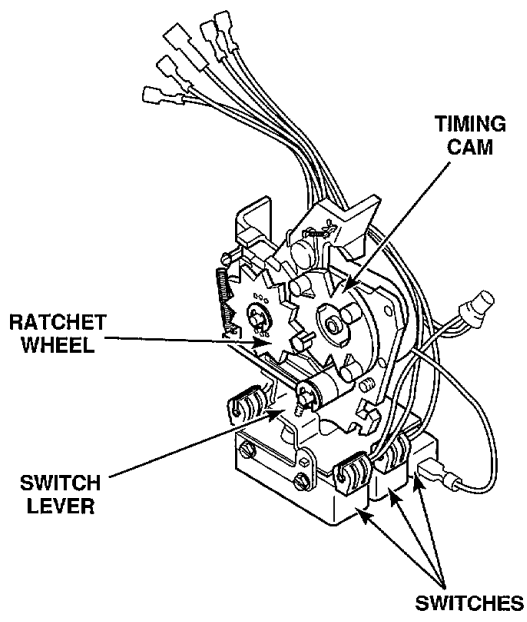

THREE SWITCH ACCUMULATOR

D188SE3A

Figure 54

⚠WARNING

To reduce the risk of electrical shock, fire, explosion, serious injury or death:
- **Disconnect electric power to the dryer before servicing.**
- **Close gas shut-off valve to gas dryer before servicing.**
- **Never start the dryer with any guards/panels removed.**
- **Whenever ground wires are removed during servicing, these ground wires must be reconnected to ensure that the dryer is properly grounded.**

W001

51. CYCLING OR LIMIT THERMOSTAT

a. While supporting the lower access panel, remove two screws from bottom edge of lower front access panel, *Figure 50.*
b. Gently lower the access panel to disengage guide lugs from bottom edge of front panel.
c. Disconnect wires from thermostat, *Figure 29* or *Figure 30.*

NOTE: Refer to appropriate wiring diagram when rewiring thermostat.

Cycling Thermostat (S.P.S.T.) or Limit Thermostat
(1) Set meter to read OHMS.
(2) Apply meter probes to the thermostat terminals.
(3) Meter should read "infinite".

52. THERMOSTAT HEATER

a. While supporting the lower access panel, remove two screws from bottom edge of lower front access panel, *Figure 50.*
b. Gently lower the access panel to disengage guide lugs from bottom edge of front panel.
c. Disconnect wires from thermostat heater, *Figure 30.*

NOTE: Refer to appropriate wiring diagram when rewiring thermostat heater.

d. Set meter to read OHMS. Apply meter probes to the thermostat heater terminals. Meter should read as follows: (Cold Ohms)

120 Volt, 60 Hz. 1,600 Ohms ± 160 Ohms.
240 Volt, 50 Hz. 9,600 Ohms ± 960 Ohms.

⚠WARNING

To reduce the risk of electrical shock, fire, explosion, serious injury or death:
- **Disconnect electric power to the dryer before servicing.**
- **Close gas shut-off valve to gas dryer before servicing.**
- **Never start the dryer with any guards/panels removed.**
- **Whenever ground wires are removed during servicing, these ground wires must be reconnected to ensure that the dryer is properly grounded.**

W001

53. THERMAL FUSE (Electric Models)

a. While supporting the lower access panel, remove two screws from bottom edge of lower front access panel, *Figure 50.*
b. Gently lower the access panel to disengage guide lugs from bottom edge of front panel.
c. Disconnect wires from thermal fuse, *Figure 29.*

NOTE: Refer to appropriate wiring diagram when rewiring thermal fuse.

d. Set meter to read OHMS on the X1 scale. Apply meter probes to thermal fuse terminals. Meter should read "infinite". If meter does not register any Ohms, replace both the thermal fuse and the limit thermostat.

54. HEATER ASSEMBLY (Electric Models)

a. While supporting the lower access panel, remove two screws from bottom edge of lower front access panel, *Figure 50.*
b. Gently lower the access panel to disengage guide lugs from bottom edge of front panel.
c. Disconnect wires from heater assembly, *Figure 29.*

NOTE: Refer to appropriate wiring diagram when rewiring heater assembly.

d. Set meter to read OHMS. Apply meter probes to the heater assembly terminals. Meter should read as follows: (Cold Ohms)

Color	Voltage/Hz.	Resistance Reading
Red	240 V 60 Hz.	10.39 ± .31 Ohms cold.
White	208 V 60 Hz.	8.2 ± .5 Ohms cold
Green	240 V 50 Hz.	10.75 ± .32 Ohms cold

SECTION V
Service Helps

⚠WARNING

To reduce the risk of electric shock, fire, explosion, serious injury or death:
- **Disconnect electric power to the dryer before servicing.**
- **Close gas shut-off valve to gas dryer before servicing.**
- **Never start the dryer with any guards/panels removed.**
- **Whenever ground wires are removed during servicing, these ground wires must be reconnected to ensure that the dryer is properly grounded.**

W001

IMPORTANT: Refer to appropriate Wiring Diagram for aid in testing dryer components.

55. MOTOR DOES NOT RUN

POSSIBLE CAUSE	TO CORRECT
Electrical power off, fuse blown, or power cord not plugged in.	Has the laundry room fuse(s) blown or become loosened, or are circuit breakers open? **The dryer itself does not have an electrical fuse.**
Loading door not closed or inoperative door switch.	Close door or test switch and replace if inoperative.
Timer improperly set (Nonmetered models).	Reset timer.
Inoperative timer (Nonmetered models).	Test timer and replace if inoperative.
Inoperative accumulator (Metered models).	Test accumulator and replace if inoperative.
Accumulator not being activated (Metered Models).	Install slide extention.
Start circuit not completed.	Press start switch button, or test switch and replace if inoperative.
Motor starting functions inoperative. No Start; or Motor hums only.	Refer to SECTION IV to check start switch and start windings.
Motor is dead, won't run.	Refer to SECTION IV to check start switch and start windings.
Motor overload protector has cycled.	Wait two or three minutes for overload protector to reset. If protector cycles repeatedly, refer to *paragraph 56*.
Motor centrifugal switch sticky or plugged with lint.	Remove dust or lint and spray with "SLYDE", No. 131P4, to clean and lubricate.
Bind in motor bearings.	Remove belt and determine if motor shaft will spin. Replace motor if shaft is locked up.
Loose motor wire harness connection block.	Firmly press connection block onto motor switch.
Broken, loose, or incorrect wiring.	Refer to appropriate wiring diagram.
Power cord is miswired.	Refer to appropriate wiring diagram and correct wiring.

⚠WARNING

To reduce the risk of electric shock, fire, explosion, serious injury or death:
- **Disconnect electric power to the dryer before servicing.**
- **Close gas shut-off valve to gas dryer before servicing.**
- **Never start the dryer with any guards/panels removed.**
- **Whenever ground wires are removed during servicing, these ground wires must be reconnected to ensure that the dryer is properly grounded.**

W001

56. DRYER STOPS IN CYCLE; QUITS AFTER A COUPLE LOADS; HAS A BURNING SMELL; CYCLES ON MOTOR THERMAL OVERLOAD PROTECTOR.

POSSIBLE CAUSE	TO CORRECT
Incorrect Voltage.	Refer to the nameplate (see Page 2 for location) for correct voltage. Refer to INSTALLATION INSTRUCTIONS (supplied with dryer) for electrical requirements.
Clothes load too large.	Remove part of load. A normal washer load is a normal dryer load. Maximum load: Dryer cylinder one half full of wet clothes.
Clothes cylinder is binding.	Check cylinder for binding and "out of round" condition. Also check front and rear bulkheads for warping. Check support rollers for binding. Check cylinder seals and glides for wear or damage. Check for clothes lodged between cylinder baffle and bulkhead.
Broken, loose or incorrect wiring.	Refer to appropriate wiring diagram.
Motor switch functions inoperative. Short in motor winding.	Refer to SECTION IV to check switch and windings.
Belt not installed properly.	Refer to *Figure 33* for proper belt position.

57. MOTOR RUNS BUT CYLINDER DOES NOT TURN

POSSIBLE CAUSE	TO CORRECT
Motor drive pulley loose.	Tighten pulley, *Figure 34.*
Belt not installed on pulley, belt upside down or twisted.	Install belt properly, *Figure 33.*
Broken cylinder belt.	Replace belt.
Clothes cylinder is binding.	Check cylinder for binding and "out of round" condition. Also check front and rear bulkheads for warping. Check cylinder rollers for binding. Check cylinder seals and glides for wear or damage.
Broken or disconnected idler lever spring.	Replace or reconnect spring, *Figure 34.*

58. MOTOR DOES NOT STOP WHILE IN OPERATION

POSSIBLE CAUSE	TO CORRECT
Motor switch rewired improperly.	Refer to appropriate wiring diagram and correct wiring.
Motor centrifugal switch sticky or plugged with lint.	Remove dust or lint and spray with "SLYDE", No. 131P4, to clean and lubricate.
Inoperative door switch.	Test switch and replace if inoperative.
Inoperative timer (Nonmetered models).	Test timer and replace if inoperative.
Inoperative accumulator (Metered models).	Test accumulator and replace if inoperative.

⚠WARNING

To reduce the risk of electric shock, fire, explosion, serious injury or death:
- **Disconnect electric power to the dryer before servicing.**
- **Close gas shut-off valve to gas dryer before servicing.**
- **Never start the dryer with any guards/panels removed.**
- **Whenever ground wires are removed during servicing, these ground wires must be reconnected to ensure that the dryer is properly grounded.**

W001

59. MOTOR STARTS WHEN DOOR IS CLOSED

POSSIBLE CAUSE	TO CORRECT
Inoperative start switch.	Test switch and replace if inoperative.

60. HEATER ASSEMBLY DOES NOT HEAT OR BURNER DOES NOT IGNITE.

POSSIBLE CAUSE	TO CORRECT
Improper or inadequate exhaust system.	See INSTALLATION INSTRUCTIONS (supplied with dryer) for exhaust requirements.
Use of plastic or thin foil exhaust duct.	Replace with solid or rigid flexible metal exhaust duct.
Blown house fuse or tripped circuit breaker.	Has the laundry room fuse(s) blown or become loosened, or are circuit breakers OFF? **The dryer itself does not have an electrical fuse.**
Temperature selector switch set at FLUFF, or inoperative.	Reset switch, or test switch and replace if inoperative.
Timer improperly set.	Reset timer. Try another cycle.
Inoperative limit thermostat.	Test thermostat and replace if inoperative.
Electric Models: Inoperative heater assembly.	Test heater assembly. Replace heater assembly if cold Ohms do not read between 8 and 10.5 Ohms.
Gas Models: Insufficient gas supply.	Check gas shut-off valve in dryer and main gas line valve. Open partially closed gas shut-off valve, or correct low gas pressure.
Inoperative drive motor switch.	Test switch and replace if inoperative.
Gas Models: Inoperative gas valve coils.	Test coils and replace if inoperative, refer to *paragraph 43.*
Gas Models: Inoperative flame sensor.	Test flame sensor and replace if inoperative. Refer to *paragraph 44.*
Gas Models: Inoperative igniter.	Test igniter and replace if inoperative. Refer to *paragraph 45.*
Electric Models: Inoperative thermal fuse.	Test thermal fuse and replace if inoperative.
Inoperative cycling thermostat.	Test thermostat and replace if inoperative.
Inoperative timer (Nonmetered models).	Test timer and replace if inoperative.
Inoperative accumulator (Metered models).	Test accumulator and replace if inoperative.
Broken, loose, or incorrect wiring.	Refer to appropriate wiring diagram.

⚠WARNING

To reduce the risk of electric shock, fire, explosion, serious injury or death:
- **Disconnect electric power to the dryer before servicing.**
- **Close gas shut-off valve to gas dryer before servicing.**
- **Never start the dryer with any guards/panels removed.**
- **Whenever ground wires are removed during servicing, these ground wires must be reconnected to ensure that the dryer is properly grounded.**

W001

61. IGNITER DOES NOT GLOW (gas supply sufficient) — GAS MODELS

POSSIBLE CAUSE	TO CORRECT
No power to power leads on valve.	Check electrical circuit, *paragraph 42.*
Flame sensor failed with contacts open.	Replace flame sensor.
Igniter broken or open.	Replace igniter.

62. BURNER IGNITES AND GOES OUT REPEATEDLY — GAS MODELS

POSSIBLE CAUSE	TO CORRECT
Improper or inadequate exhaust system. Weather hood flapper restricted.	See INSTALLATION INSTRUCTIONS (supplied with dryer) for exhaust requirements.
Burner heat not holding flame sensor contacts open.	Replace flame sensor, or correct gas supply problem.
Insufficient gas supply.	Check gas supply and pressure. Is gas shut-off valve turned on?
Cracked igniter.	Replace igniter and bracket.
Inoperative or intermittent gas valve coils.	Check and replace appropriate coil. Refer to *paragraph 43.*

63. IGNITER GLOWS BUT BURNER DOES NOT IGNITE — GAS MODELS

POSSIBLE CAUSE	TO CORRECT
Flame sensor failed in closed position.	Replace flame sensor.
Open secondary coil or holding coil.	Replace gas valve (in-warranty), or replace coils (out-of-warranty). Refer to *paragraph 43.*
Insufficient gas supply.	Check gas supply and pressure. Is gas shut-off valve turned on?
Igniter and bracket installed improperly on burner tube assembly.	Loosen screw and properly position igniter and bracket on burner tube assembly.
Flame sensor installed improperly on burner housing.	Loosen screw and properly position the flame sensor on the burner housing.

⚠WARNING

To reduce the risk of electric shock, fire, explosion, serious injury or death:

- **Disconnect electric power to the dryer before servicing.**
- **Close gas shut-off valve to gas dryer before servicing.**
- **Never start the dryer with any guards/panels removed.**
- **Whenever ground wires are removed during servicing, these ground wires must be reconnected to ensure that the dryer is properly grounded.**

W001

64. HEATER ASSEMBLY OR BURNER SHUTS OFF PREMATURELY

POSSIBLE CAUSE	TO CORRECT
Improper or inadequate exhaust system. Weather hood flapper restricted. (Repeatedly cycling on limit thermostat.)	See INSTALLATION INSTRUCTIONS (supplied with dryer) for exhaust requirements.
Gas Models: Insufficient gas supply.	Check gas shut-off valve in dryer and main gas line valve. Open partially closed gas shut-off valve, or correct low pressure.
Gas Models: Dryer not properly equipped for type of gas used.	Refer to "Gas Burner Conversion Procedures" supplied in gas burner conversion kit.
Gas Models: Improperly adjusted burner flame.	Adjust flame, *paragraph 38.*
Cycling off on limit thermostat.	Momentarily connect a jumper wire across thermostat terminals. If heater element heats or burner ignites when jumper wire is connected, refer to *paragraph 65.*
Gas models: Flame sensor contact closing prematurely. Burner flame improperly adjusted.	Replace flame sensor or adjust burner flame, *paragraph 38.*
Inoperative cycling thermostat.	Test thermostat and replace if inoperative.
Inoperative timer (Nonmetered models).	Test timer and replace if inoperative.
Broken, loose, or incorrect wiring.	Refer to appropriate wiring diagram.

65. HEATER ASSEMBLY OR BURNER REPEATEDLY CYCLES OFF ON LIMIT THERMOSTAT

POSSIBLE CAUSE	TO CORRECT
External exhaust system longer or providing greater restriction than recommended.	Refer to INSTALLATION INSTRUCTIONS (supplied with dryer) for exhaust system requirements.
Use of plastic or thin foil exhaust duct.	Replace with solid or rigid flexible metal exhaust duct.
Clogged lint filter.	Clean lint filter.
Lint in internal dryer ductwork.	Disassemble dryer ductwork and clean.
Lint or other obstruction in external exhaust system.	Disassemble and clean exhaust system.
Hinged damper on exhaust system weather hood not free to open.	Free hinged damper or replace weather hood.
Limit thermostat cycling at too low a temperature.	Replace thermostat, *paragraph 23.*
Air leak around loading door. (Door not sealing due to damaged seal or inoperative door catch.)	Replace seal or catch.
Air leak at blower seal.	Check and replace seal if necessary.

⚠WARNING

To reduce the risk of electric shock, fire, explosion, serious injury or death:
- **Disconnect electric power to the dryer before servicing.**
- **Close gas shut-off valve to gas dryer before servicing.**
- **Never start the dryer with any guards/panels removed.**
- **Whenever ground wires are removed during servicing, these ground wires must be reconnected to ensure that the dryer is properly grounded.**

W001

66. HEATER ASSEMBLY OR BURNER DOES NOT SHUT OFF

POSSIBLE CAUSE	TO CORRECT
Inoperative motor switch. (Timer must be in a heat setting.)	Test switch and replace if inoperative.
Motor does not stop.	Refer to *paragraph 58.*
Rewired improperly.	Refer to appropriate wiring diagram and correct wiring.
Heater assembly shorted.	Remove heater assembly and check for short.

67. CLOTHES DO NOT DRY

POSSIBLE CAUSE	TO CORRECT
Improper or inadequate exhaust system. Weather hood flapper restricted.	See INSTALLATION INSTRUCTIONS (supplied with dryer) for exhaust requirements.
Heater assembly does not heat or burner does not ignite.	Refer to *paragraph 60.*
Too much water in articles being dried.	Remove excess water.
Clothes load too large.	Remove part of load. A normal washer load is normal dryer load. Maximum load: Dryer cylinder one half full of wet clothes.
Excessive lint on lint filter.	Clean lint filter.
Load too small.	Add one or two bath towels to load.
Heat selector switch set on FLUFF or inoperative	Reset switch, or test and replace the switch if inoperative.
Improper or inadequate exhaust system.	See INSTALLATION INSTRUCTIONS (supplied with dryer) for exhaust requirements.
Heater assembly or burner shuts off prematurely.	Refer to *paragraph 64.*
Gas Models: Gas line pressure too high or too low.	If Natural Gas line pressure to dryer exceeds 8 inch water column pressure, or is lower than 4 inch water column, ask Gas Company to correct.
Improper belt installation (Low RPM). Is belt connected on motor shaft?	Check for proper belt installation, *Figure 33*

⚠WARNING

To reduce the risk of electric shock, fire, explosion, serious injury or death:

- **Disconnect electric power to the dryer before servicing.**
- **Close gas shut-off valve to gas dryer before servicing.**
- **Never start the dryer with any guards/panels removed.**
- **Whenever ground wires are removed during servicing, these ground wires must be reconnected to ensure that the dryer is properly grounded.**

W001

68. CLOTHES ARE TOO HOT WHEN REMOVED FROM DRYER

POSSIBLE CAUSE	TO CORRECT
Improper or inadequate exhaust system.	Refer to INSTALLATION INSTRUCTIONS (supplied with dryer) for exhaust requirements.
Clothes are removed from dryer before cycle has completed.	Allow the dryer to complete the cycle through the cool-down to the OFF position.
Inoperative cycling thermostat. Inoperative thermostat heater on the DELICATE setting.	Test cycling thermostat or thermostat heater and replace if inoperative.
Inoperative timer (Nonmetered models).	Test timer and replace if inoperative.

SECTION VI
Internal Wiring of Dryer Motor Switch

⚠WARNING

To reduce the risk of electric shock, fire, explosion, serious injury or death:
- **Disconnect electric power to the dryer before servicing.**
- **Close gas shut-off valve to gas dryer before servicing.**
- **Never start the dryer with any guards/panels removed.**
- **Whenever ground wires are removed during servicing, these ground wires must be reconnected to ensure that the dryer is properly grounded.**

W001

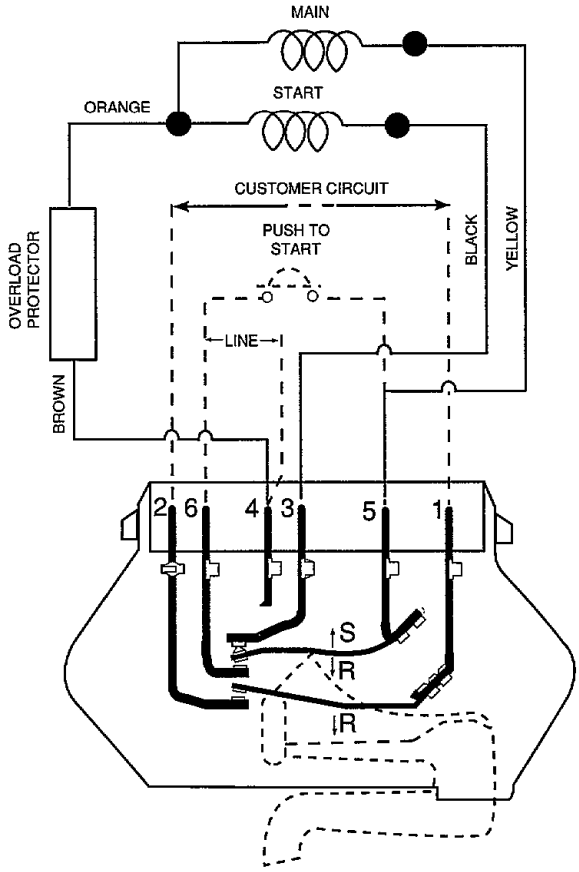

SWITCH SHOWN IN START POSITION

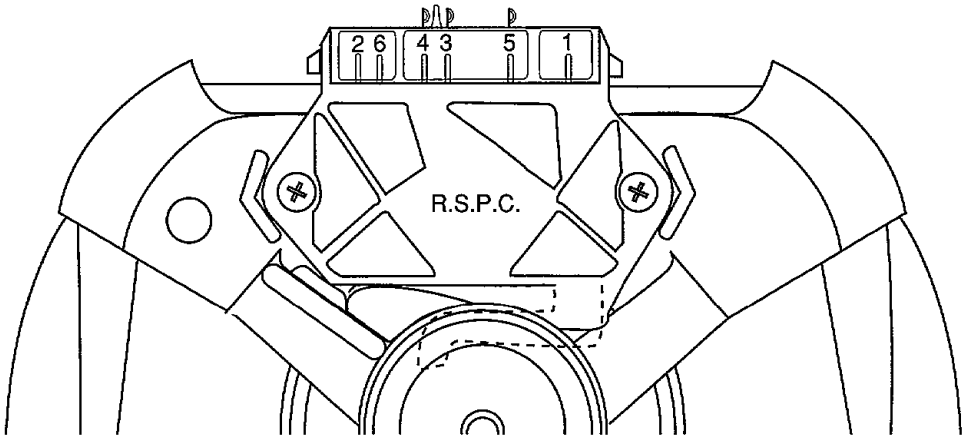

D166SE3A