Tumble Dryers

120 Pound Capacity
170 Pound Capacity

Models Through Serial No. 0907000048

Refer to Page 7 for Model Numbers

Troubleshooting

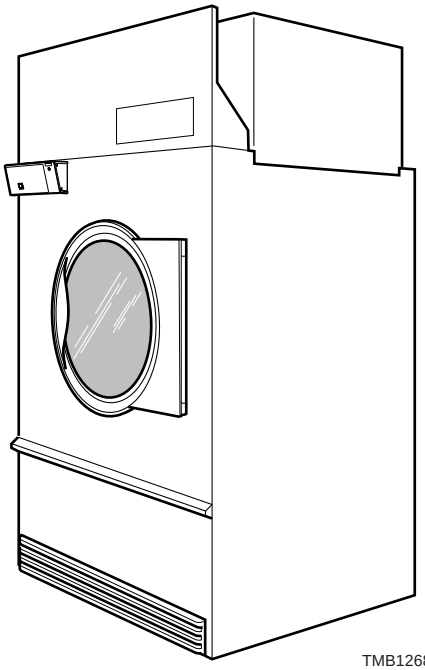

Alliance Laundry Systems

www.alliancelaundry.com

Part No. 70399901R2
December 2016

Table of Contents

Section 1 – Safety Information 3
Locating an Authorized Service Person 5
Safety Warnings and Decals 5
Safety Precautions for Servicing Tumble Dryers 5

Section 2 – Introduction 6
Model Identification 6
Customer Service 8
Serial Plate Location 8
How a Tumble Dryer Works 9

Section 3 – Troubleshooting 10
1. Motor Does Not Start 11
2. Motor Overload Protector Cycles Repeatedly 12
3. Motor Runs But Cylinder Does Not Turn 13
4. Motor Does Not Stop 14
5. No Heat Condition (Non-CE and Non-Australian Models) 15
6. Gas Burner Does Not Ignite 17
7. Burner Ignites and Goes Out Repeatedly 19
8. Burner Shuts off Prematurely 20
9. Burner Repeatedly Cycles Off On High Limit Thermostat 21
10. Steam Valve or Burner Does Not Shut-off 22
11. Clothes Do Not Dry 23
12. Tumble Dryer Overheating 24
13. Burners Not Burning Properly - Gas Models 25
14. Loading Door Opens During Operation 26
15. Tumble Dryer Runs But No Steam To Coils - Steam Models 27
16. Water In Steam Line - Steam Models 28
17. Tumble Dryer Will Not Start, Time On Drying Timer, Door Closed 29
18. Motor Runs But Will Not Heat 31
19. Cylinder Turns, But Will Not Heat 32

Section 4 – Adjustments 34
20. Main Gas Burner Air Inlet Shutters (All Gas Models) 34
21. Airflow Switch 35
22. Loading Door Strike 35
23. Cylinder Belt Tension 36
24. Cylinder Clearance 38
25. Drive Belt Tension 40
26. Fan Belt Tension 41

Section 5 – Hybrid Timer Control Troubleshooting 43
27. Control Has No Display – OPL Models 44
28. Display Flashes “dr” With Door Closed – OPL Models 46
29. Motor Will Not Start/Run – OPL Models 48
30. Unit Will Not Heat – Gas – OPL Models 50
31. Error Codes 53

Section 6 – On Premise Micro Control (RM) Troubleshooting 54
32. Control Has No Display.....55
33. Door Open Indicator 57
34. Motor Will Not Start/Run 60
35. Unit Will Not Heat – Gas/Steam 62
36. Error Codes 65

Section 1
Safety Information

Throughout this manual and on machine decals, you will find precautionary statements (“CAUTION”, “WARNING”, and “DANGER”) followed by specific instructions. These precautions are intended for the personal safety of the operator, user, servicer, and those maintaining the machine.

DANGER

Danger indicates an imminently hazardous situation that, if not avoided, will cause severe personal injury or death.

WARNING

Warning indicates a hazardous situation that, if not avoided, could cause severe personal injury or death.

CAUTION

Caution indicates a hazardous situation that, if not avoided, may cause minor or moderate personal injury or property damage.

Additional precautionary statements (“IMPORTANT” and “NOTE”) are followed by specific instructions.

IMPORTANT: The word “IMPORTANT” is used to inform the reader of specific procedures where minor machine damage will occur if the procedure is not followed.

NOTE: The word “NOTE” is used to communicate installation, operation, maintenance or servicing information that is important but not hazard related.

In the interest of safety, some general precautions relating to the operation of this machine follow.

WARNING

- **Failure to install, maintain and/or operate this product according to the manufacturer’s instructions may result in conditions which can produce serious injury, death and/or property damage.**
- **Do not repair or replace any part of the product or attempt any servicing unless specifically recommended or published in this Service Manual and unless you understand and have the skills to carry out the servicing.**
- **Whenever ground wires are removed during servicing, these ground wires must be reconnected to ensure that the product is properly grounded and to reduce the risk of fire, electric shock, serious injury or death.**

W006R2

IMPORTANT INFORMATION: During the lifetime of a tumble dryer, it may require service. The information contained in this manual was written and is intended for use by qualified service technicians who are familiar with the safety procedures required in the repair of a tumble dryer, and who are equipped with the proper tools and testing equipment.

WARNING

To reduce the risk of electric shock, fire, explosion, serious injury or death:

- **Disconnect electric power to the tumbler before servicing.**
- **Never start the tumbler with any guards/ panels removed.**
- **Whenever ground wires are removed during servicing, these ground wires must be reconnected to ensure that the tumbler is properly grounded.**

W240

WARNING

Repairs that are made to your products by unqualified persons can result in hazards due to improper assembly or adjustments subjecting you, or the inexperienced person making such repairs, to the risk of serious injury, electrical shock, or death.

W007

CAUTION

If you or an unqualified person perform service on your product, you must assume the responsibility for any personal injury or property damage which may result. The manufacturer will not be responsible for any injury or property damage arising from improper service and/or service procedures.

W008

NOTE: The WARNING and IMPORTANT instructions appearing in this manual are not meant to cover all possible conditions and situations that may occur. It must be understood that common sense, caution and carefulness are factors which CANNOT be built into this tumble dryer. These factors MUST BE supplied by the person(s) installing, maintaining or operating the tumble dryer.

Always contact your dealer, distributor, service agent or the manufacturer on any problems or conditions you do not understand.

Locating an Authorized Service Person

Alliance Laundry Systems is not responsible for personal injury or property damage resulting from improper service. Review all service information before beginning repairs.

Warranty service must be performed by an authorized technician, using authorized factory parts. If service is required after the warranty expires, Alliance Laundry Systems also recommends contacting an authorized technician and using authorized factory parts.

Safety Warnings and Decals

SAFETY WARNINGS and decals have been provided in key locations to remind you of important precautions for the safe operation and maintenance of your tumble dryer. Please take the time to review these warnings before proceeding with service work.

All decals have been designed and applied to withstand washing and cleaning. Decals should be checked periodically to be sure they have not been damaged, removed, or painted. Refer to the ***Parts Manual*** for ordering replacement decals.

Safety Precautions for Servicing Tumble Dryers

- **Disconnect electrical service.**
- **Shut off supply gas valve before servicing gas components.**
- **Access panel MUST be reinstalled after inspection or servicing of tumble dryer is completed.**
- **Use a non-corrosive leak detecting compound to check all pipe connections for gas leaks. DO NOT USE AN OPEN FLAME TO CHECK FOR GAS LEAKS!**
- **Belt guard MUST be reinstalled after inspection or servicing of tumble dryer is completed.**
- **Contactor box cover MUST be reinstalled after inspection or servicing of electric and/or reversing tumble dryer is completed.**
- **Loading door switch MUST be operational before putting tumble dryer into service.**
- **Junction box cover MUST be reinstalled after inspection or servicing of tumble dryer is completed.**

Section 2
Introduction

Model Identification

Information in this manual is applicable to these models:

	Gas			Steam/Thermal Oil	
120 Pound	AT120L AT120N CA120L CA120N CT120L CT120N CU120L CU120N DR120G2-BA120L DR120G2-BA120N DR120G2-BT120L DR120G2-BT120N DR120G2-BU120L DR120G2-BU120N GA120L GA120N GT120L GT120N GU120L GU120N HA120L HA120N	HT120L HT120N HU120L HU120N IPD120G2-IT120L IPD120G2-IT120N KA120L KA120N KT120L KT120N KU120L KU120N LA120L LA120N LT120L LT120N LU120L LU120N PA120L PA120N PT120L PT120N	PU120L PU120N SA120L SA120N ST120L ST120N SU120L SU120N UA120L UA120N UT120L UT120N UU120L UU120N WT120L WT120N XT120L XT120N XU120L XU120N YT120L YT120N	AT120S CT120S CT120T CU120S CU120T DR120S2-BT120S DR120S2-BT120T DR120S2-BU120S DR120S2-BU120T GT120S GT120T GU120S GU120T HT120S HT120T HU120S HU120T IPD120S2-IT120S IPD120S2-IT120T KT120S KT120T KU120S KU120T LT120S LT120T	LU120S LU120T PT120S PT120T PU120S PU120T ST120S ST120T SU120S SU120T UT120S UT120T UU120S UU120T WT120S WT120T XT120S XT120T XU120S XU120T YT120S YT120T YU120S YU120T

	Gas			Steam/Thermal Oil	
170 Pound	AT170L AT170N CA170L CA170N CT170L CT170N CU170L CU170N DR170G2-BA170L DR170G2-BA170N DR170G2-BT170L DR170G2-BT170N DR170G2-BU170L DR170G2-BU170N GA170L GA170N GT170L GT170N GU170L GU170N HA170L HA170N	HT170L HT170N HU170L HU170N IPD170G2-IT170L IPD170G2-IT170N KA170L KA170N KT170L KT170N KU170L KU170N LA170L LA170N LT170L LT170N LU170L LU170N PA170L PA170N PT170L PT170N	PU170L PU170N SA170L SA170N ST170L ST170N SU170L SU170N UA170L UA170N UT170L UT170N UU170L UU170N WT170L WT170N XT170L XT170N XU170L XU170N YT170L YT170N	AT170S CT170S CT170T CU170S CU170T DR170S2-BT170S DR170S2-BT170T DR170S2-BU170S DR170S2-BU170T GT170S GT170T GU170S GU170T HT170S HT170T HU170S HU170T IPD170S2-IT170S IPD170S2-IT170T KT170S KT170T KU170S KU170T LT170S	LT170T LU170S LU170T PT170S PT170T PU170S PU170T ST170S ST170T SU170S SU170T UT170S UT170T UU170S UU170T WT170S WT170T XT170S XT170T XU170S XU170T YT170S YT170T

Includes models with the following control suffixes:

R3 – reversing DX4 OPL
RD – reversing DMP OPL
RM – reversing OPL micro
RQ – reversing dual digital timer
RT – reversing manual timer

Customer Service

If literature or replacement parts are required, contact the source from whom the machine was purchased or contact Alliance Laundry Systems at (920) 748-3950 for the name and address of the nearest authorized parts distributor.

For technical assistance, call (920) 748-3121.

Serial Plate Location

When calling or writing about your product, be sure to mention model and serial numbers. Model and serial numbers are located on serial plate as shown.

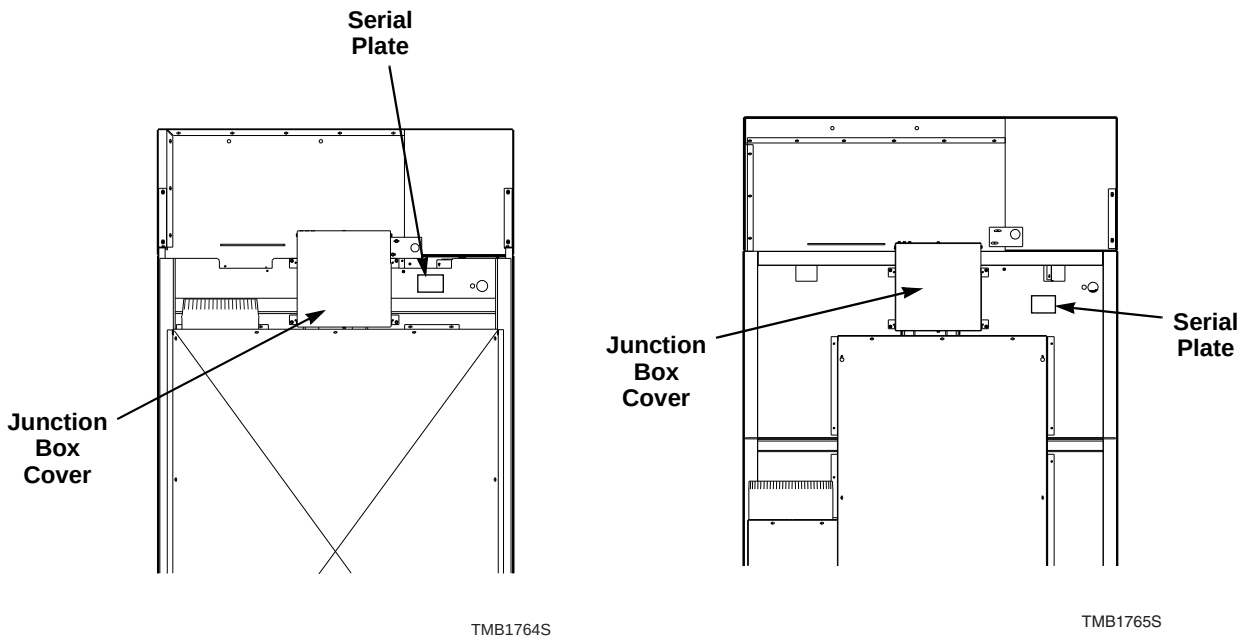

How a Tumble Dryer Works

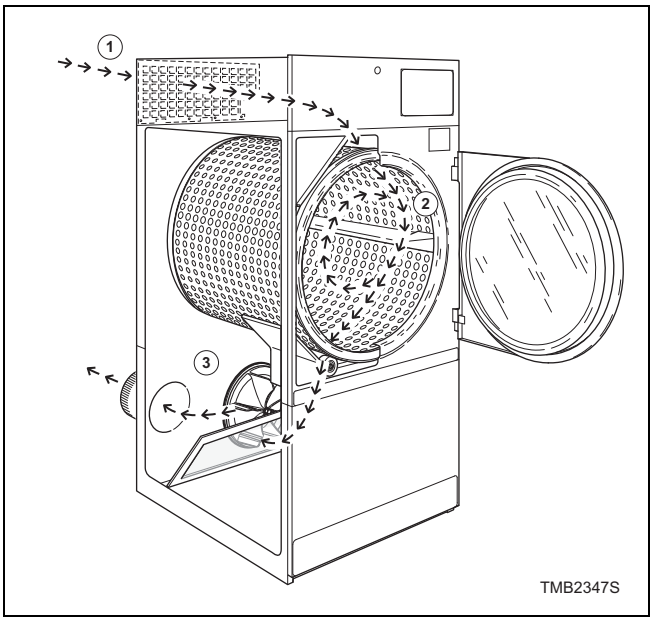

A tumble dryer uses heated air to dry loads of laundry.

① When the motor is started, the exhaust fan pulls room temperature air in through the air intake at the rear of the tumble dryer and over the heat source (burner flame for gas, heating element for electric, and coil for steam).

② The heated air moves into the cylinder, where it is circulated through the wet load by the tumbling action of the cylinder.

③ The air then passes through the lint filter, exhaust fan, and is vented to the outdoors.

Section 3
Troubleshooting

WARNING

To reduce the risk of electric shock, fire, explosion, serious injury or death:
- **Disconnect electric power to the tumble dryer before servicing.**
- **Close gas shut-off valve to gas tumble dryer before servicing.**
- **Close steam valve to steam tumble dryer before servicing.**
- **Never start the tumble dryer with any guards/panels removed.**
- **Whenever ground wires are removed during servicing, these ground wires must be reconnected to ensure that the tumble dryer is properly grounded.**

W002R1

IMPORTANT: Refer to appropriate wiring diagram for aid in testing tumble dryer components.

1. Motor Does Not Start

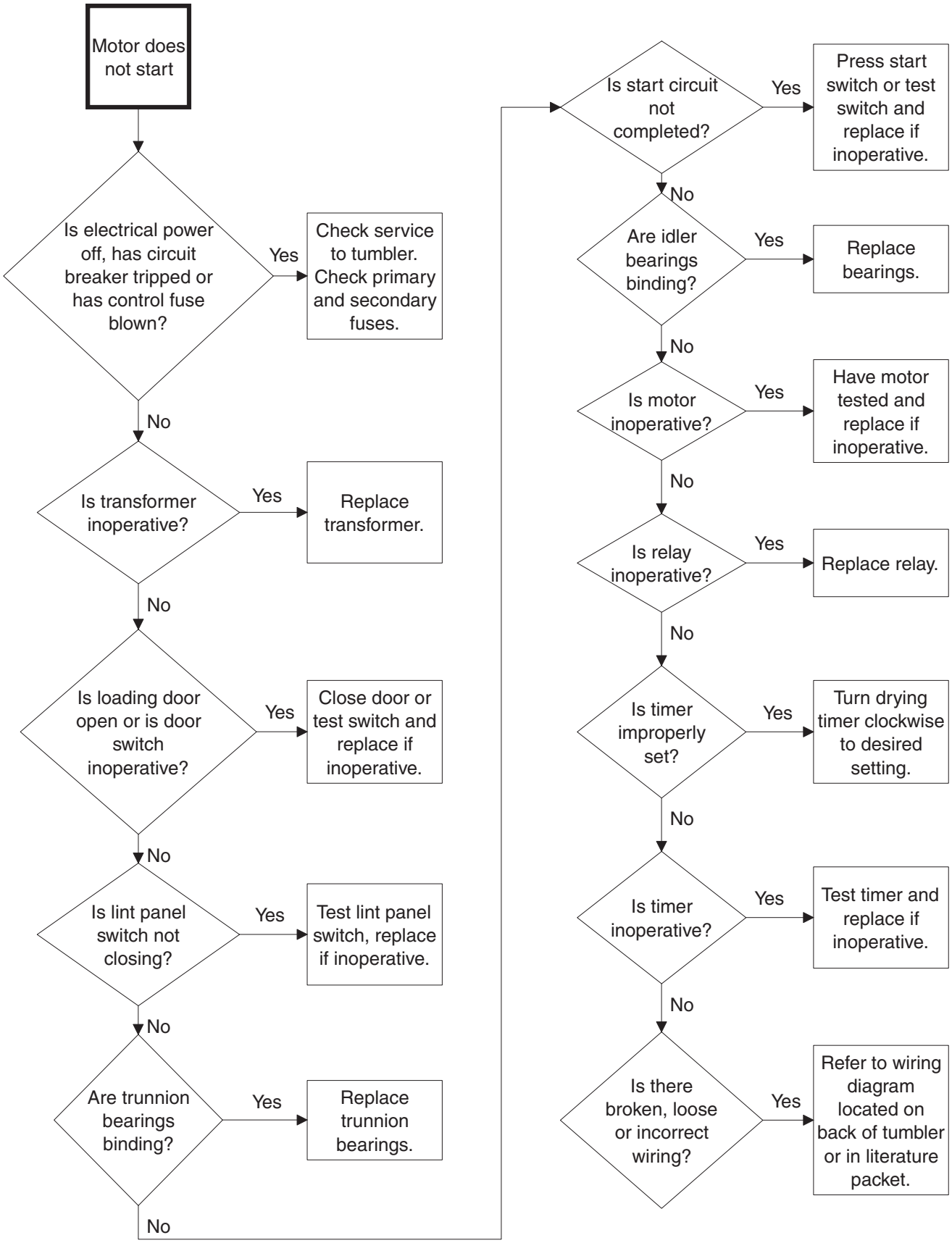

TMB1918S

2. Motor Overload Protector Cycles Repeatedly

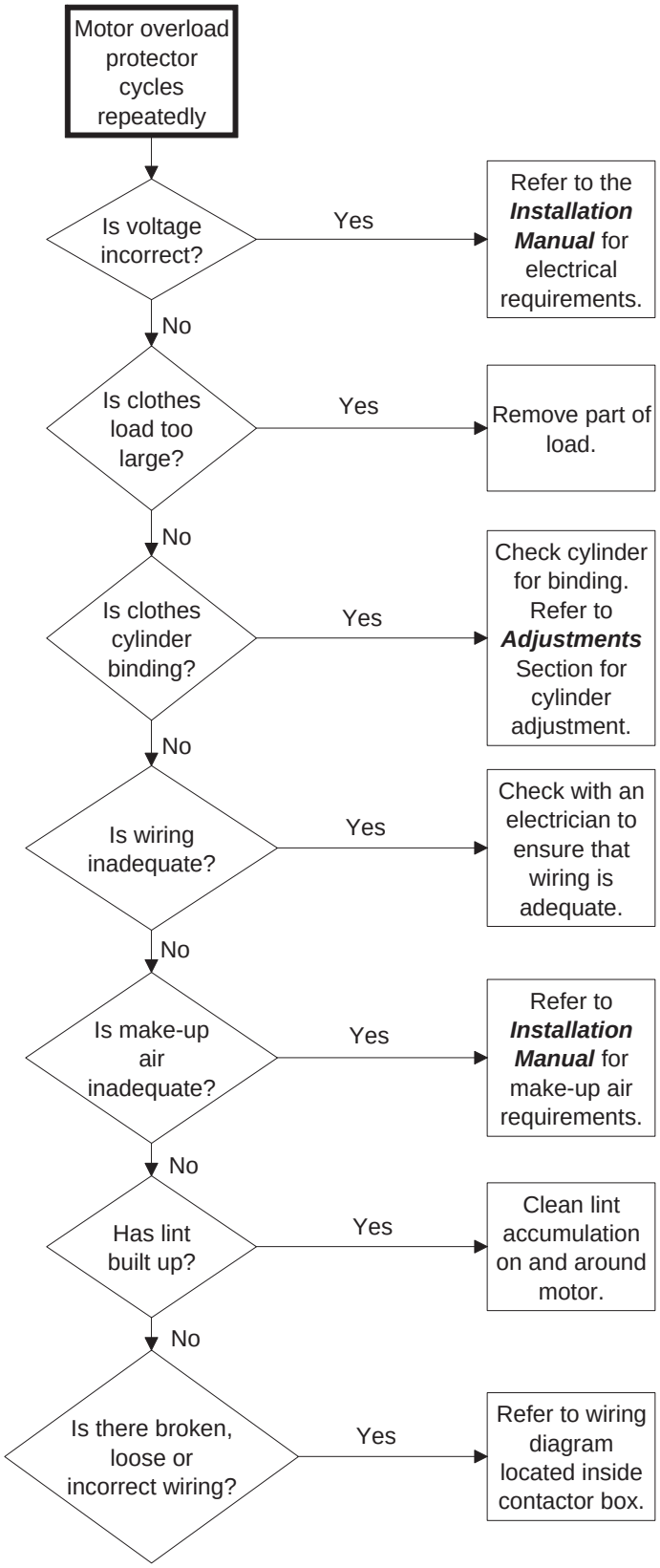

TMB1874S

3. Motor Runs But Cylinder Does Not Turn

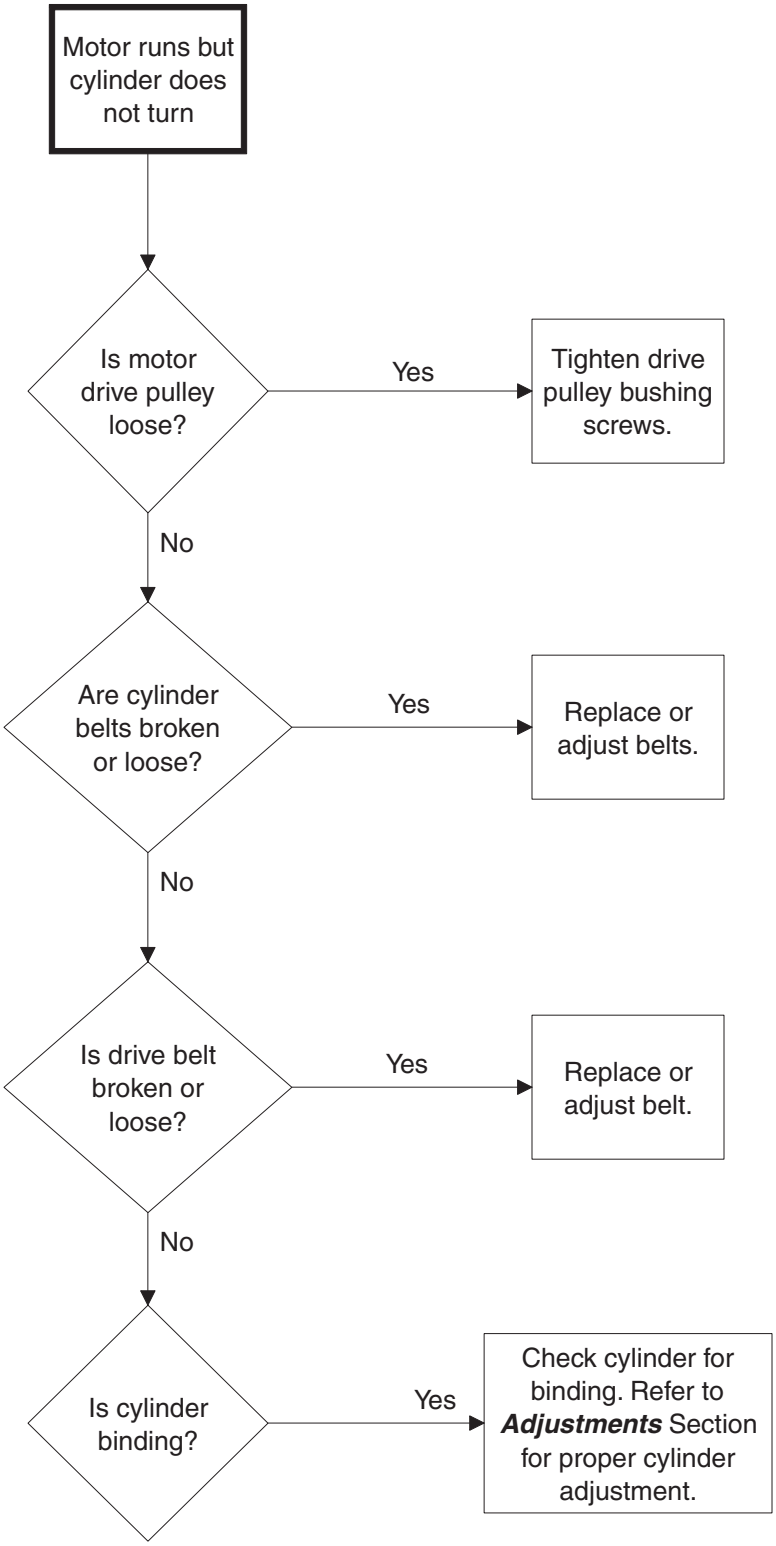

TMB1919S

4. Motor Does Not Stop

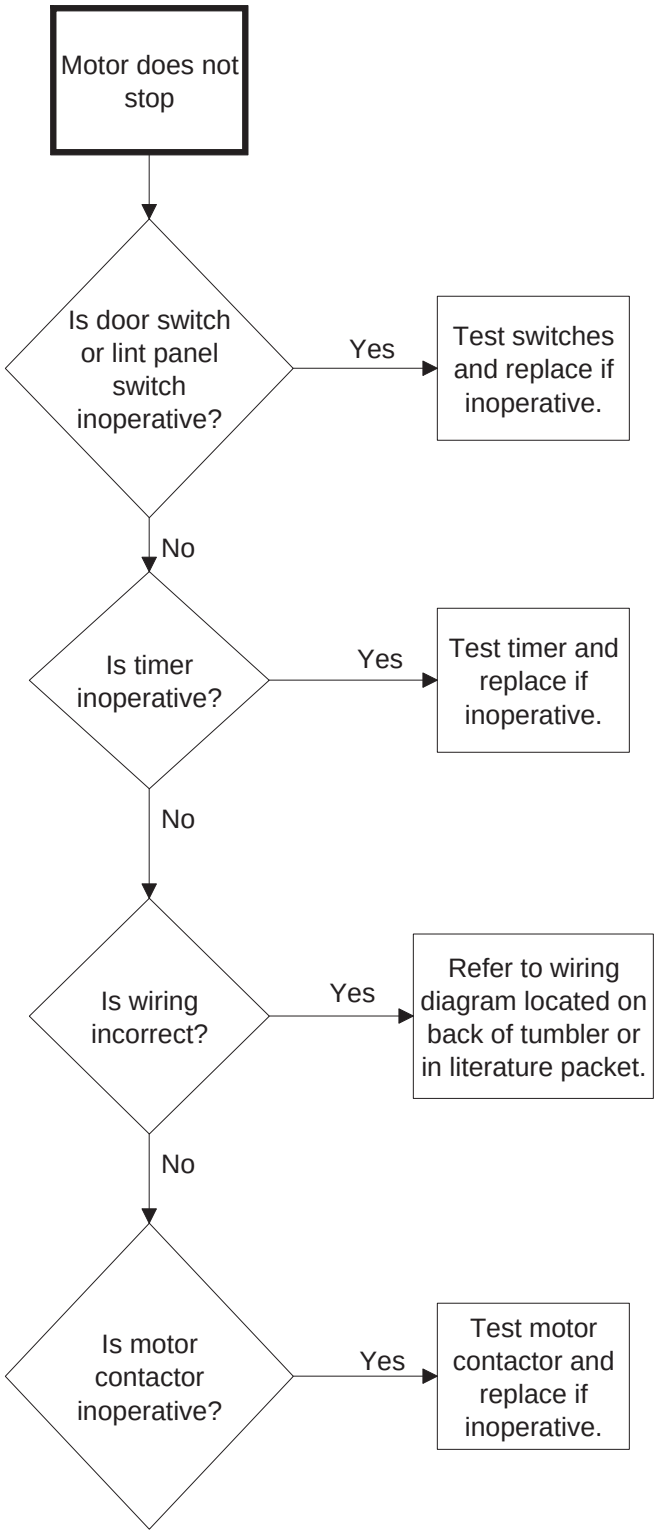

TMB1920S

5. No Heat Condition (Non-CE and Non-Australian Models)

Ignition Control Module Function

There are four components to the ignition system: the module, the spark ignitor, the high voltage cable and ground wire. When 24 VAC is applied between the TH and GND terminals on the module, the module will send the high voltage signal to the igniter and 24 VAC to the gas valve coils. Gas will hit the sparking igniter and flame will be established. The igniter being engulfed in flame will create a millivolt electric signal that is sent back to the module by the high voltage cable; this is what the module sees as flame recognition. If the millivolt signal is not at the module in ten seconds, the module will go into safety lockout. The voltage will be cut from the igniter and gas valve coils and will not be stored until voltage is cycled at the module.

Intermittent Heat Test Procedure

On ignition control modules with date codes higher than 08t2, perform the following test.

Start the tumble dryer and run for 10 minutes (verify that the tumble dryer is heating properly). After the 10 minute cycle, re-start the tumble dryer and once again verify the unit is heating. Repeat this procedure 3 times. If the tumble dryer passes this test, the ignition control module is operating properly and SHOULD NOT be changed. Refer to ***SECTION 3*** for additional service procedures.

5. No Heat Condition (Non-CE and Non-Australian Models) (continued)

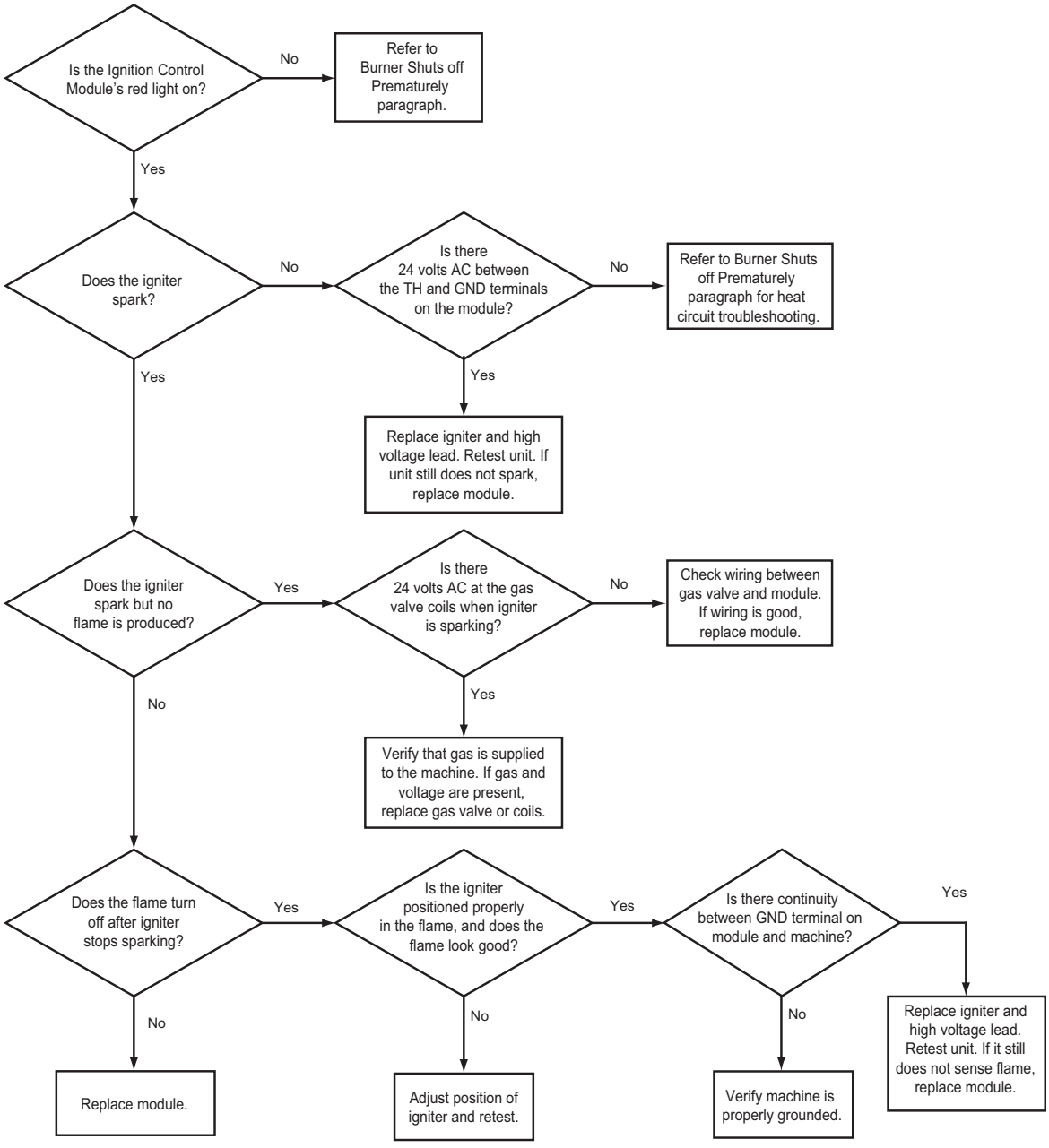

6. Gas Burner Does Not Ignite

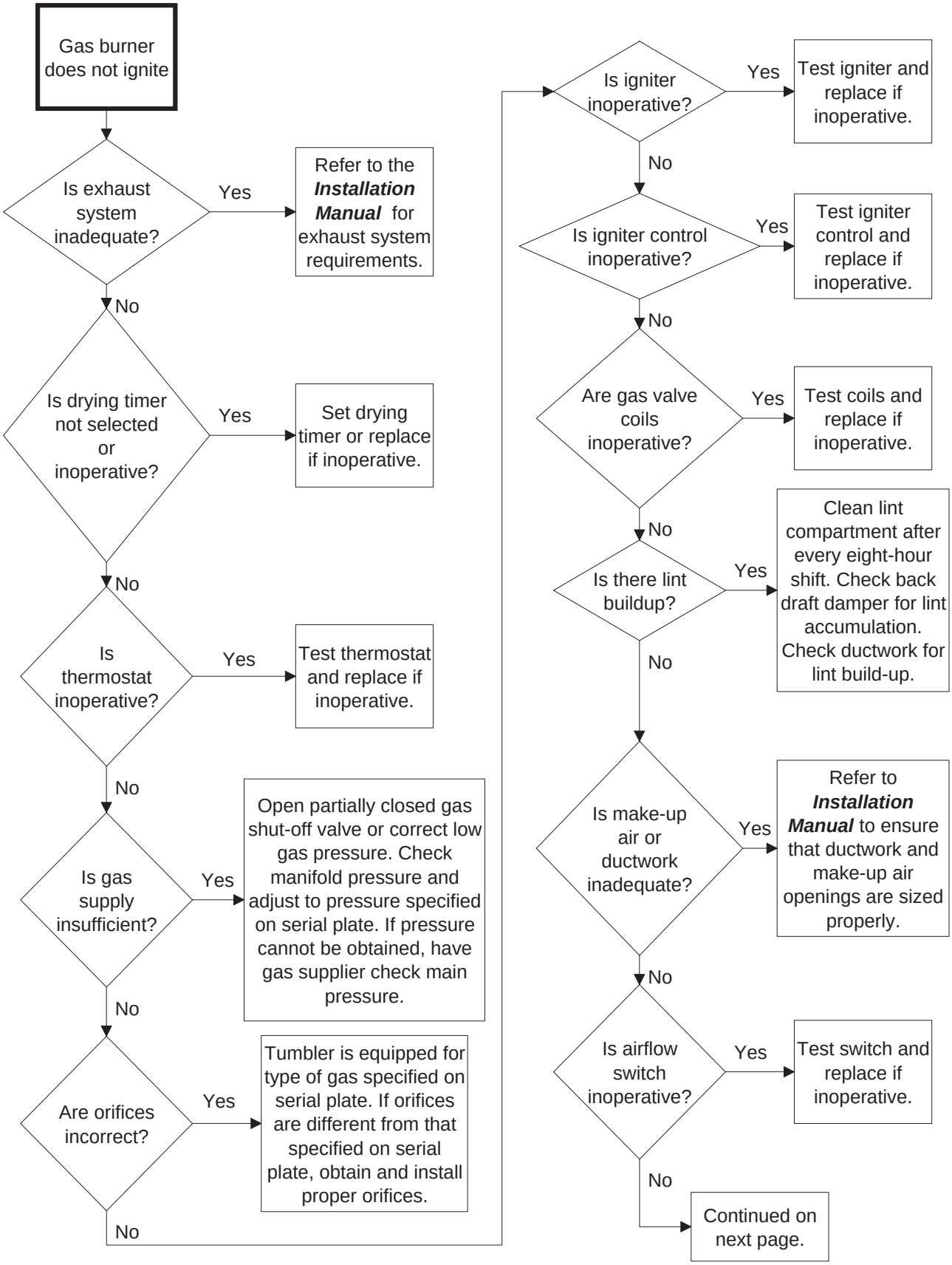

TMB1921S-a

6. Gas Burner Does Not Ignite (continued)

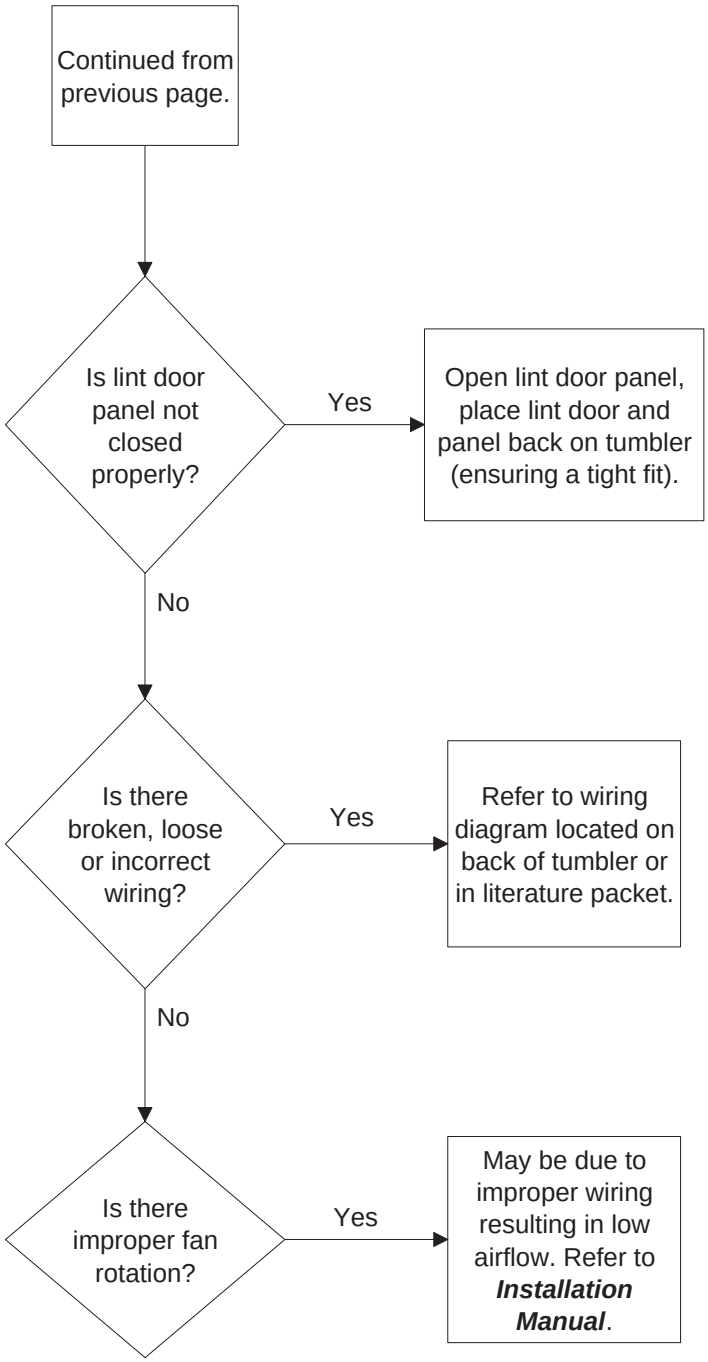

TMB1921S-b

7. Burner Ignites and Goes Out Repeatedly

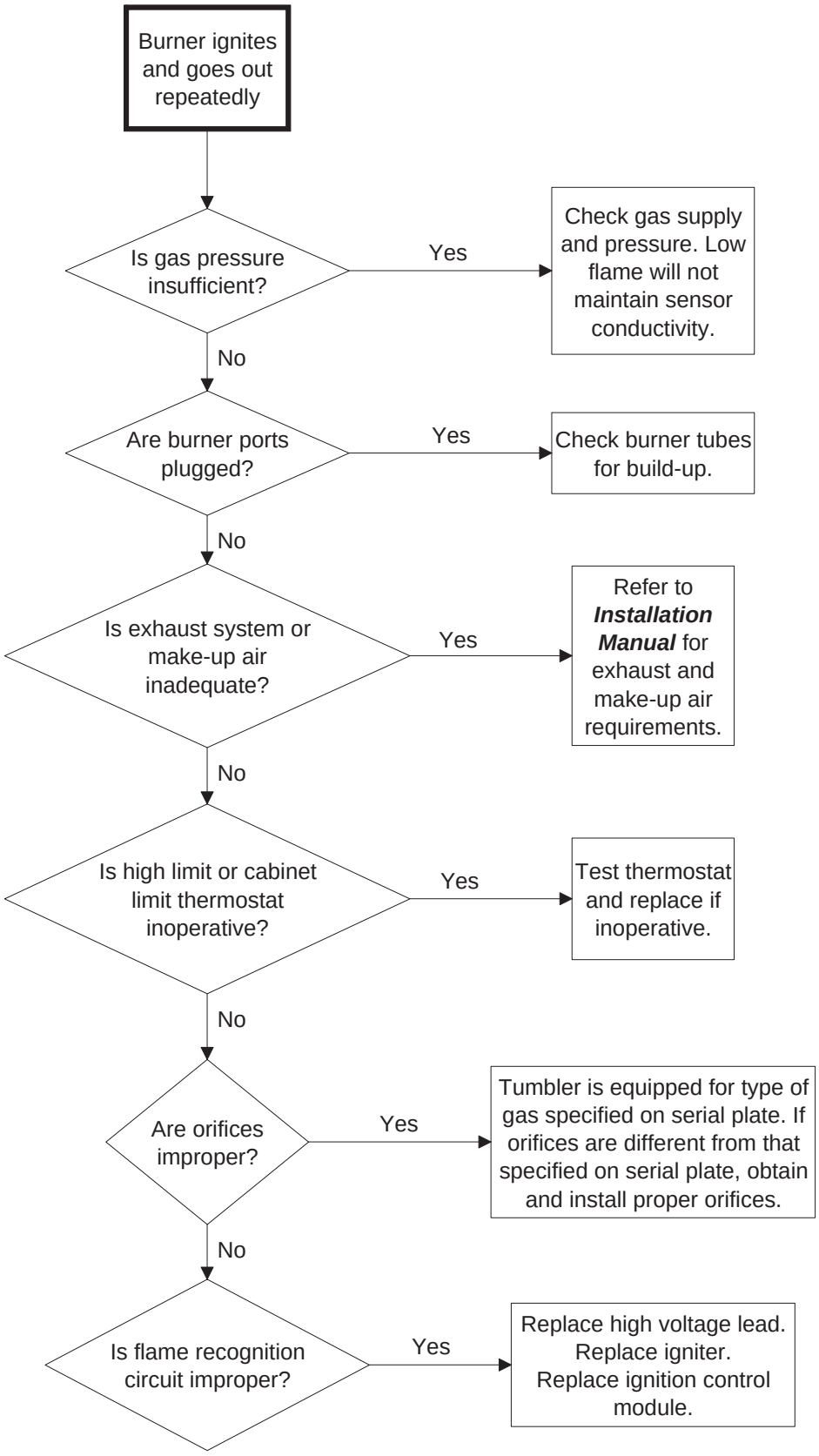

TMB1922S

8. Burner Shuts off Prematurely

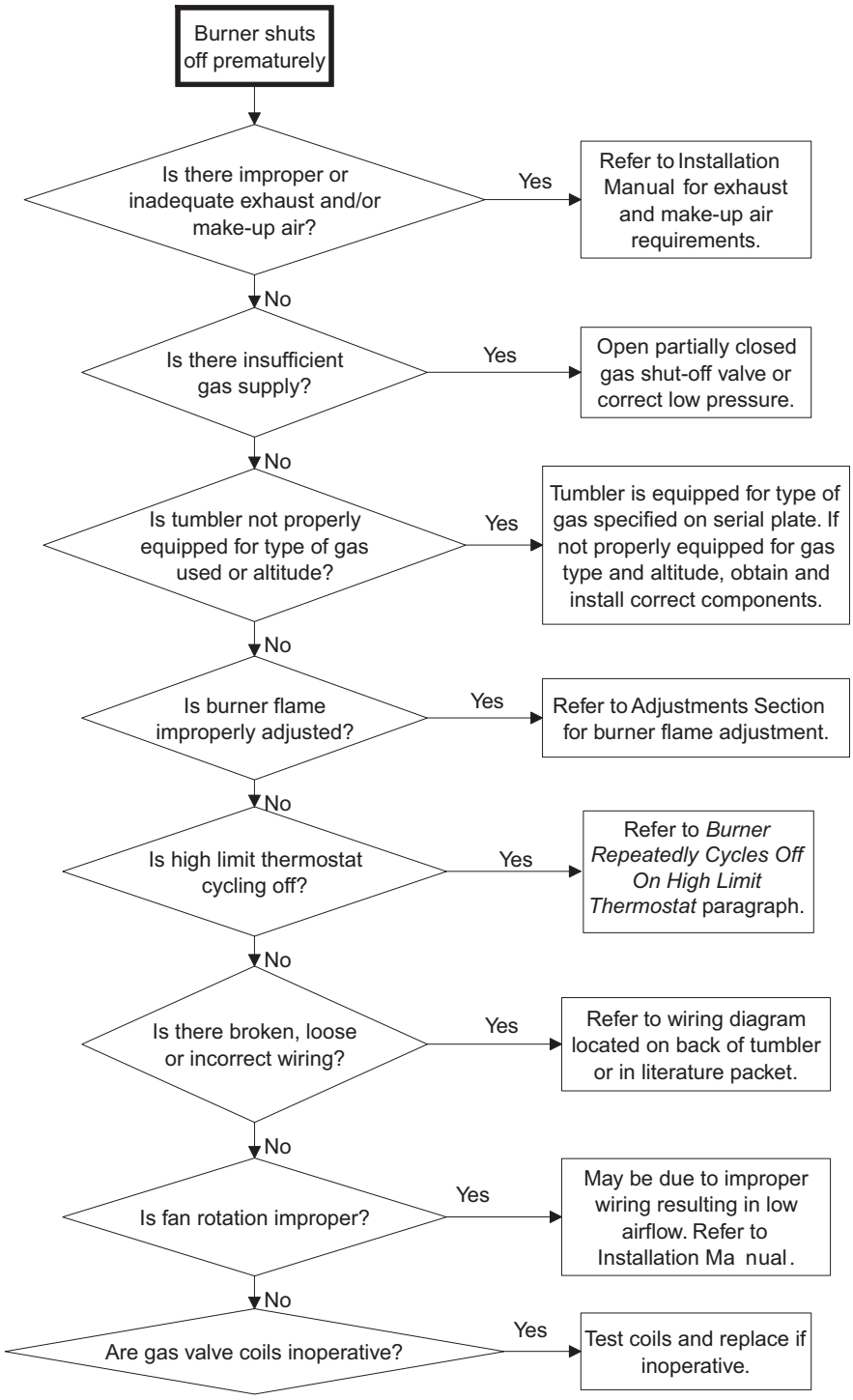

TMB2412S

9. Burner Repeatedly Cycles Off On High Limit Thermostat

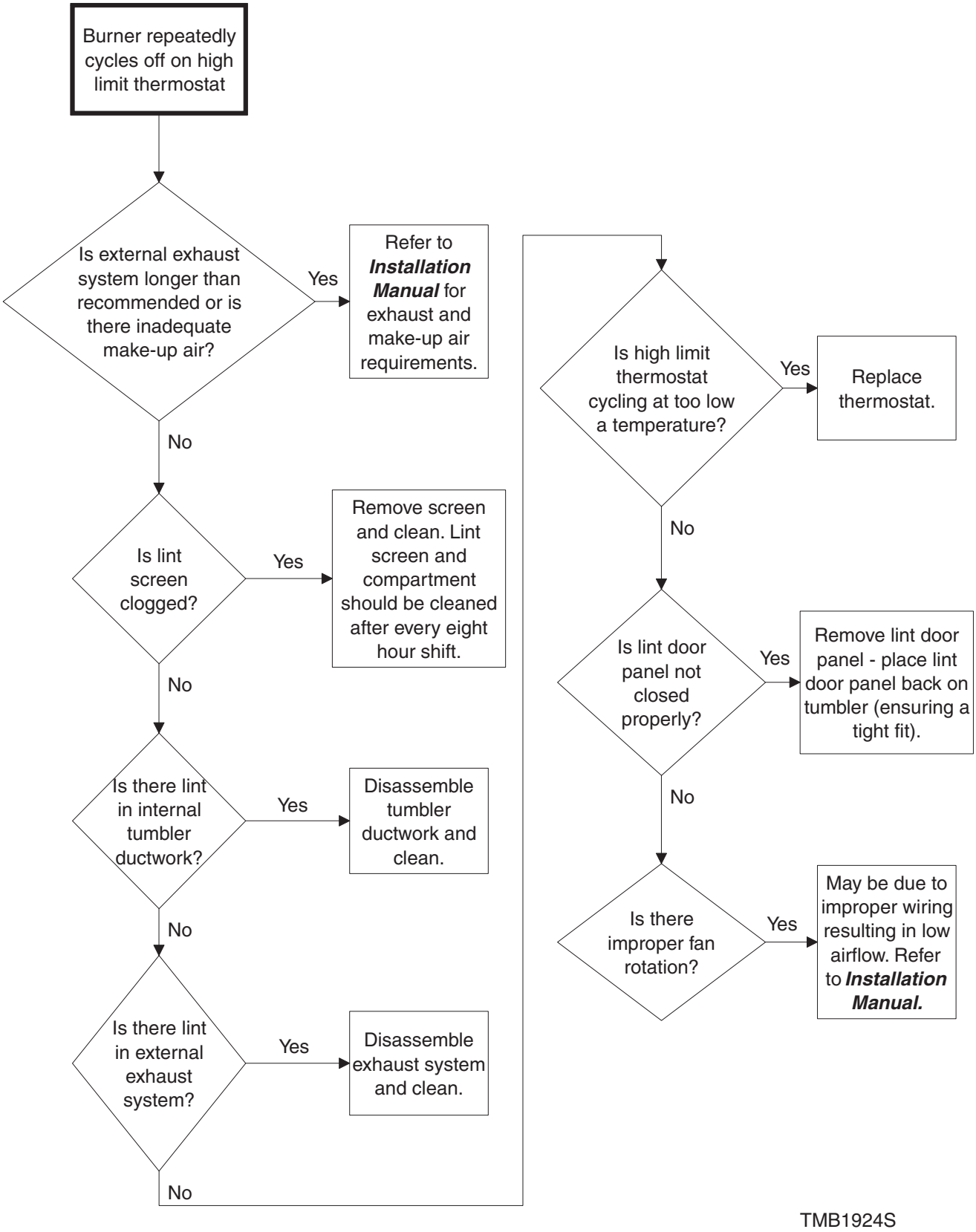

10. Steam Valve or Burner Does Not Shut-off

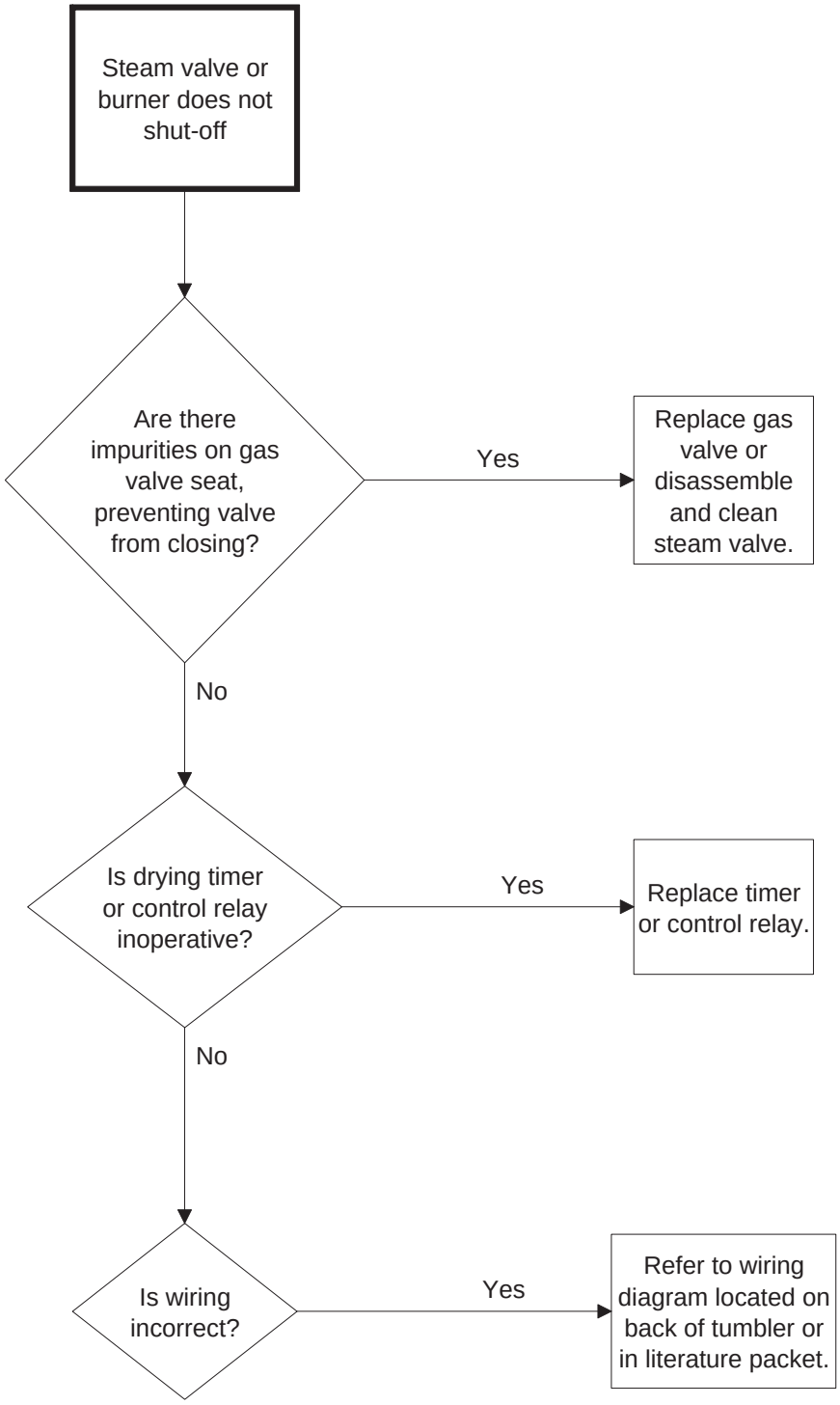

TMB1925S

11. Clothes Do Not Dry

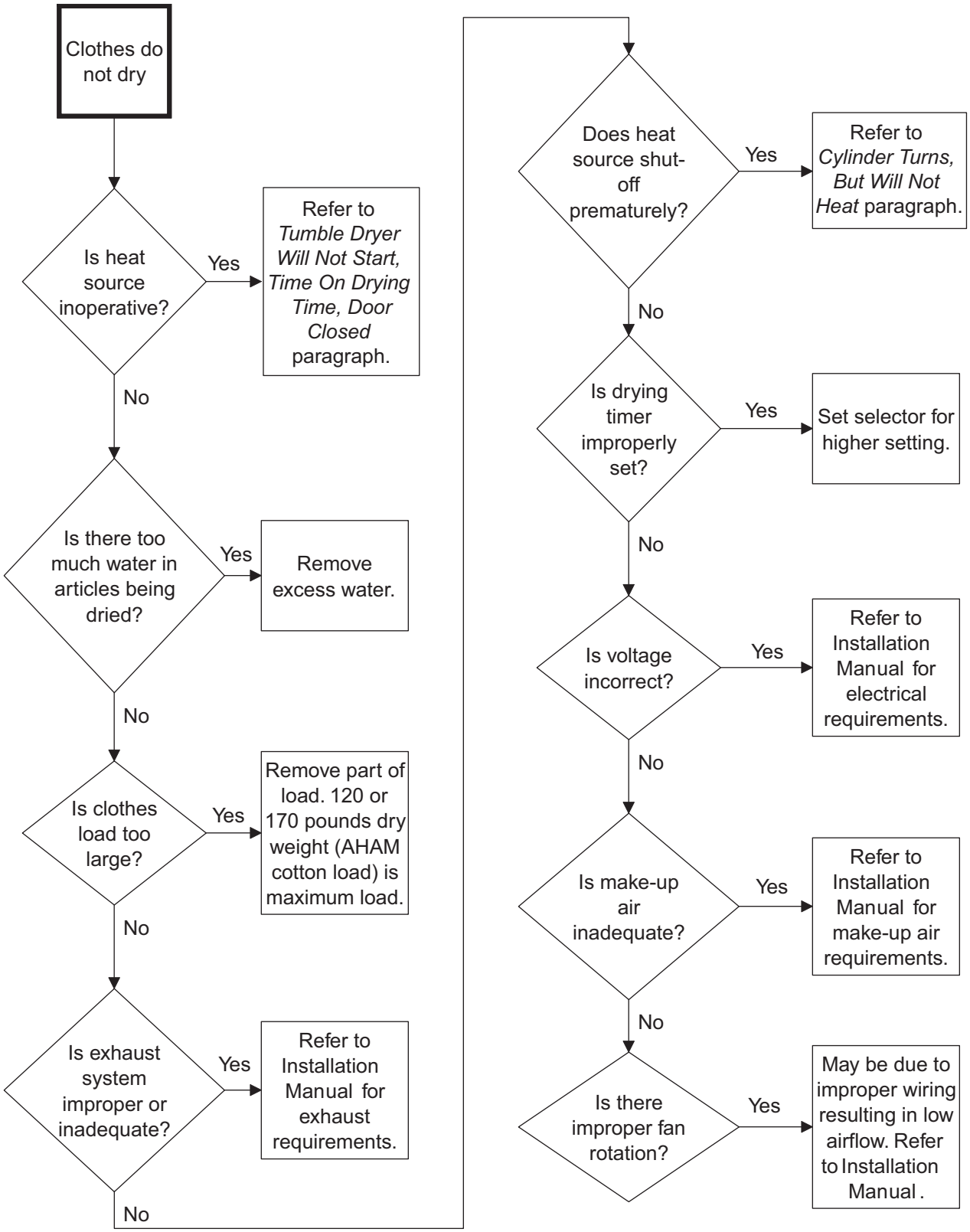

TMB2413S

12. Tumble Dryer Overheating

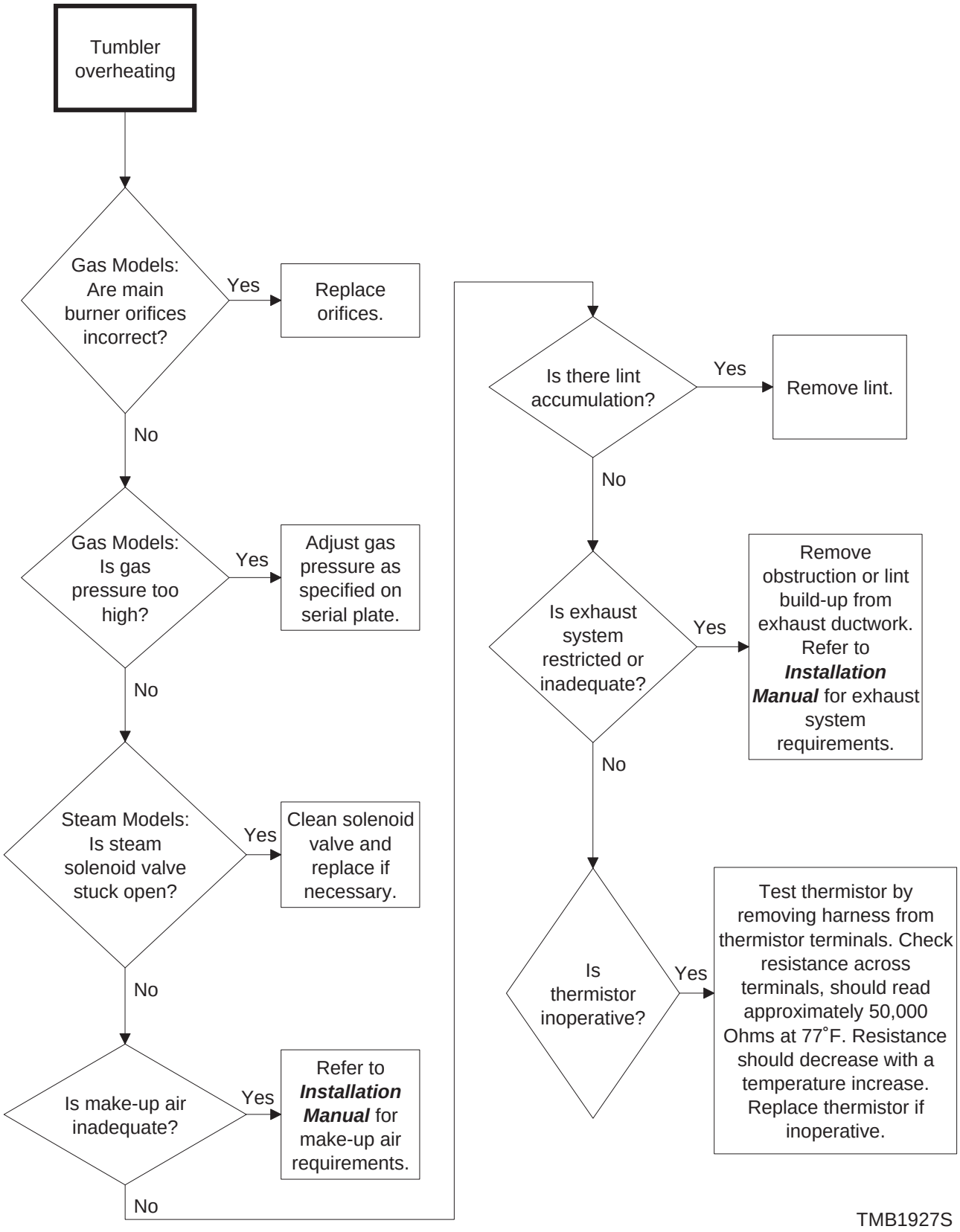

13. Burners Not Burning Properly - Gas Models

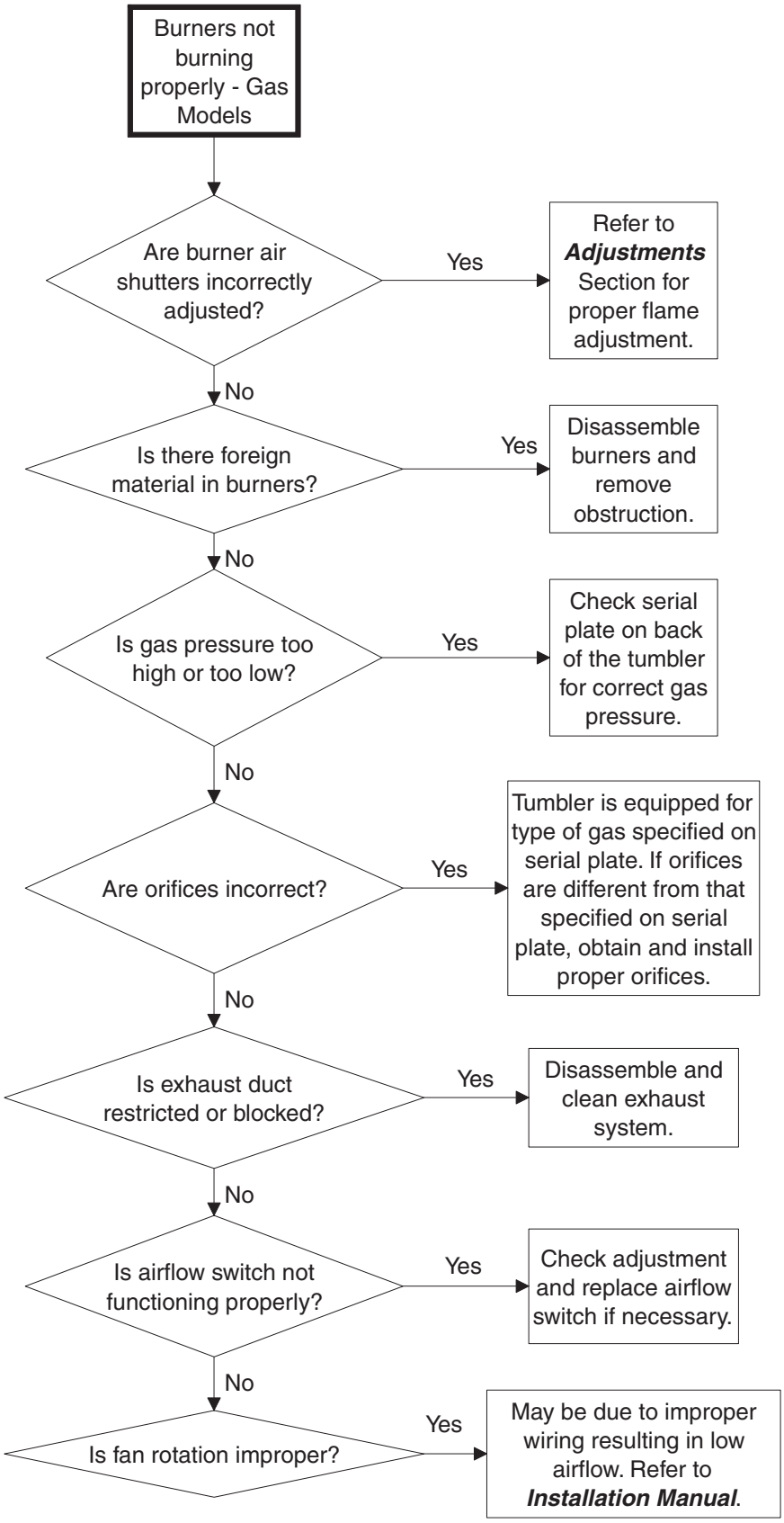

TMB1928S

14. Loading Door Opens During Operation

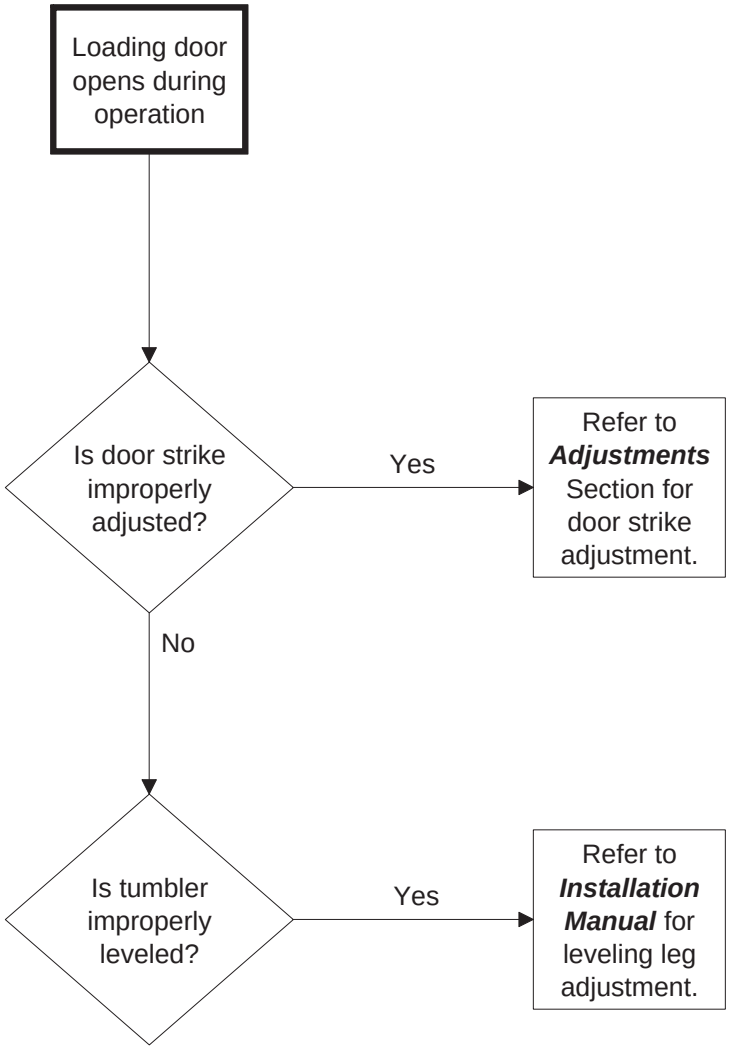

TMB1885S

15. Tumble Dryer Runs But No Steam To Coils - Steam Models

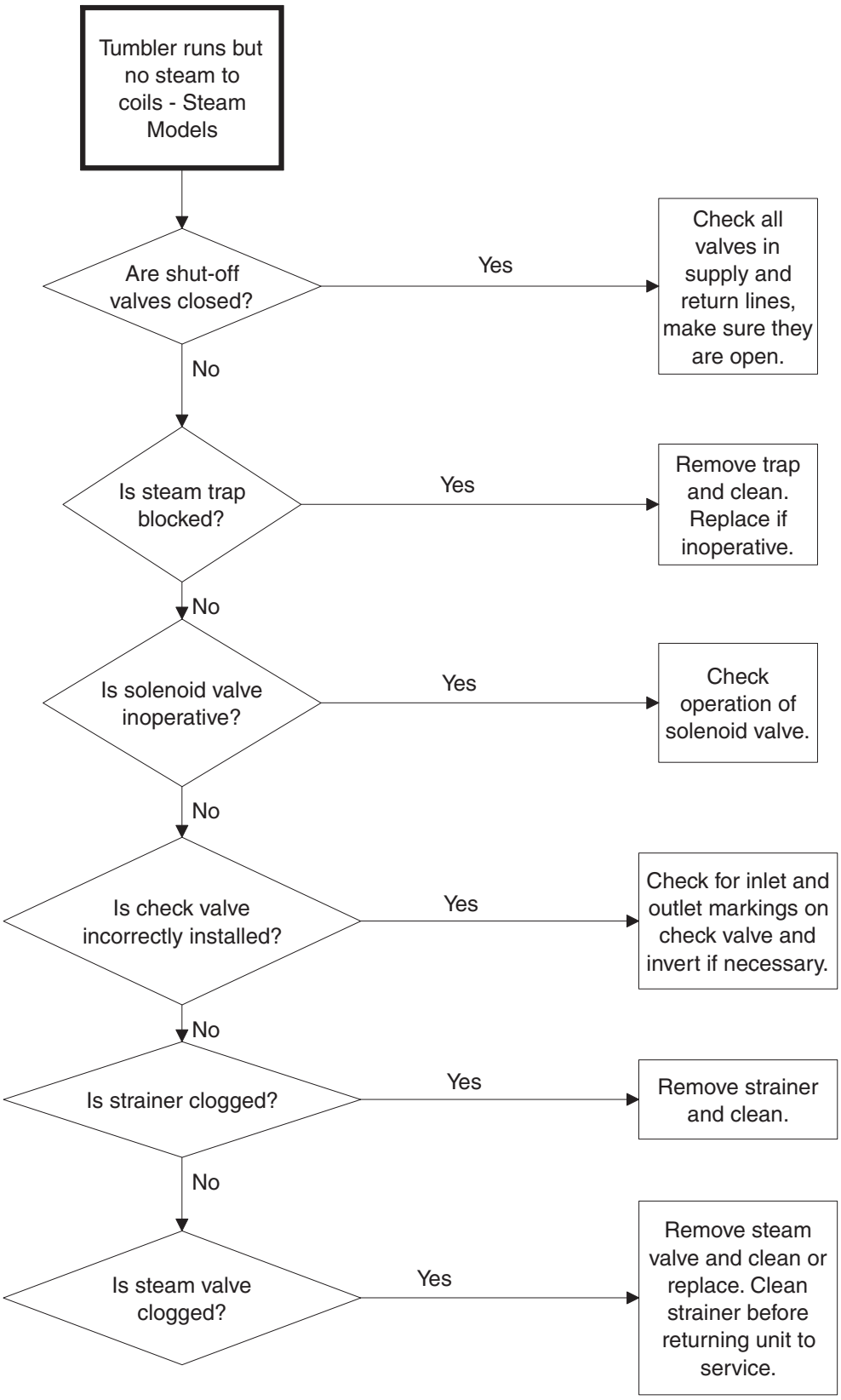

TMB1929S

16. Water In Steam Line - Steam Models

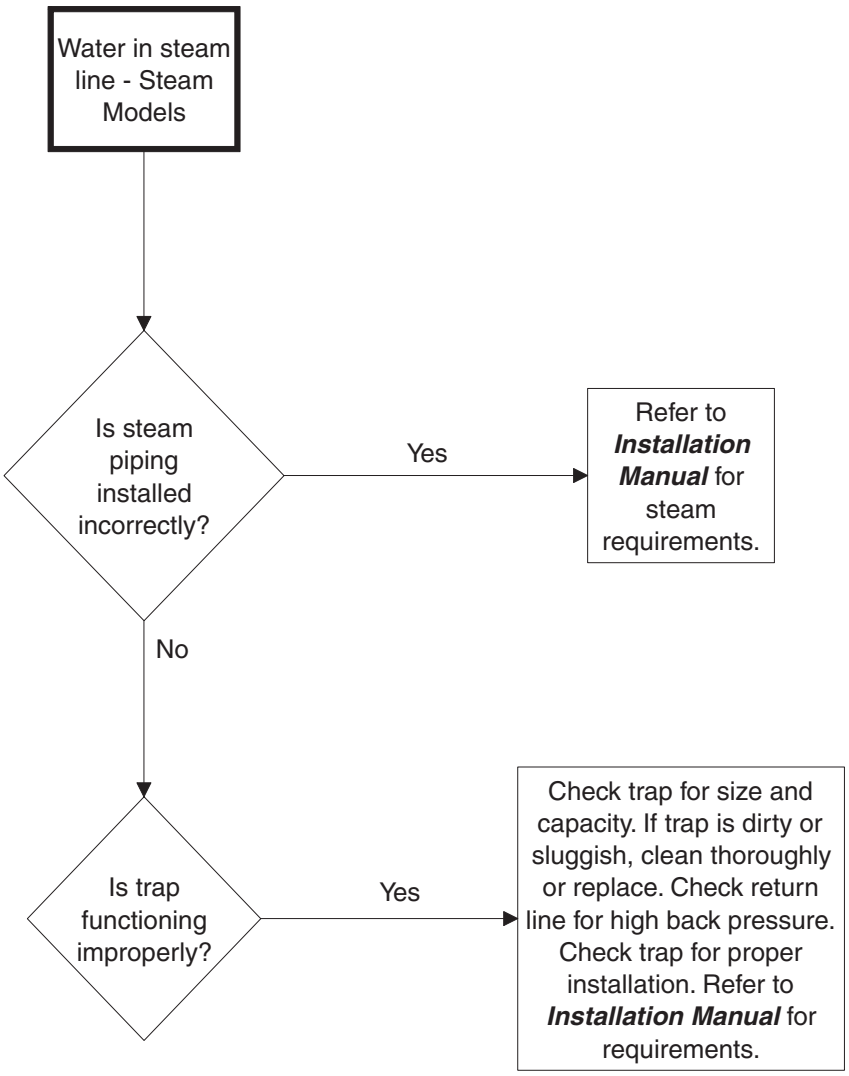

TMB1930S

17. Tumble Dryer Will Not Start, Time On Drying Timer, Door Closed

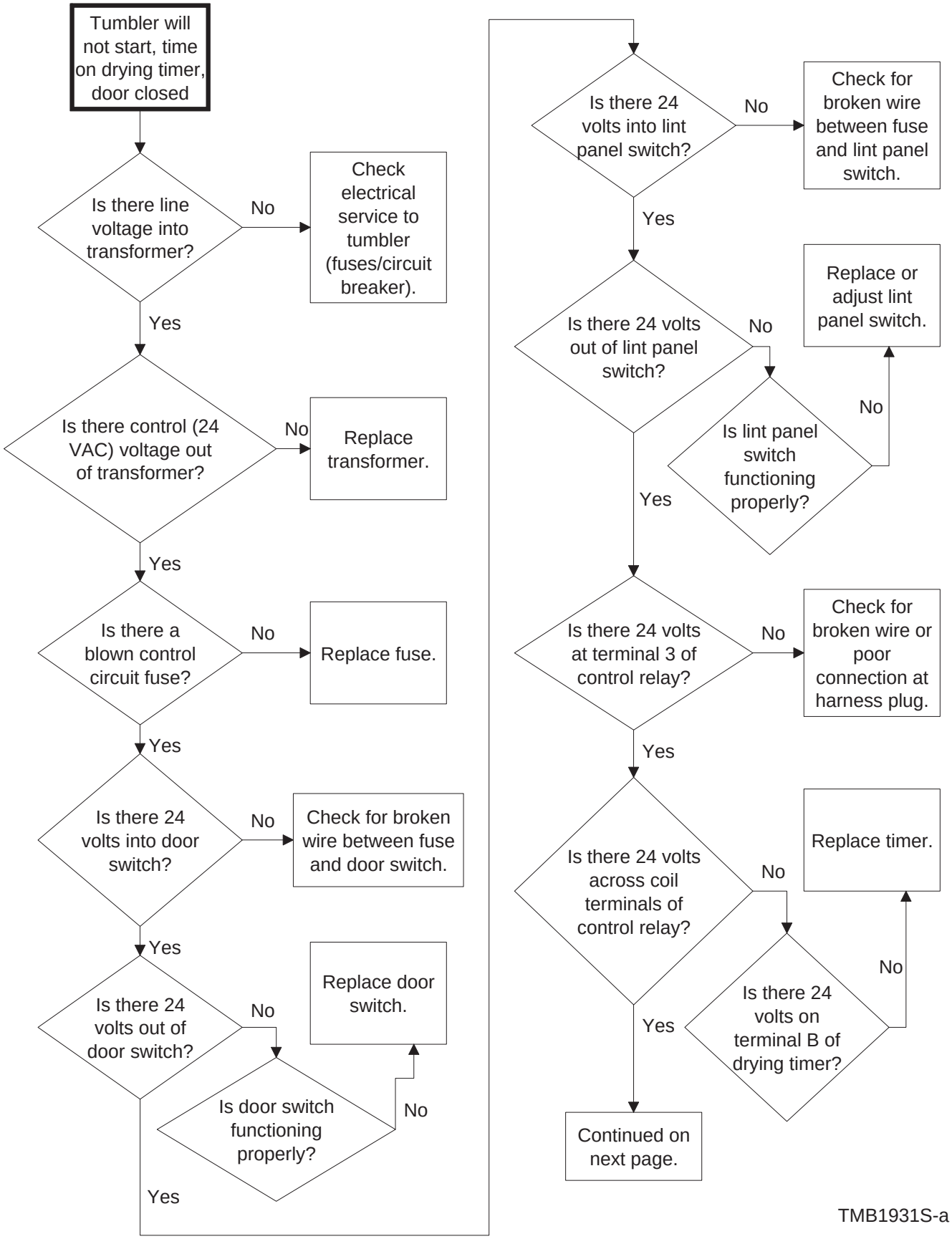

17. Tumble Dryer Will Not Start, Time On Drying Timer, Door Closed (cont.)

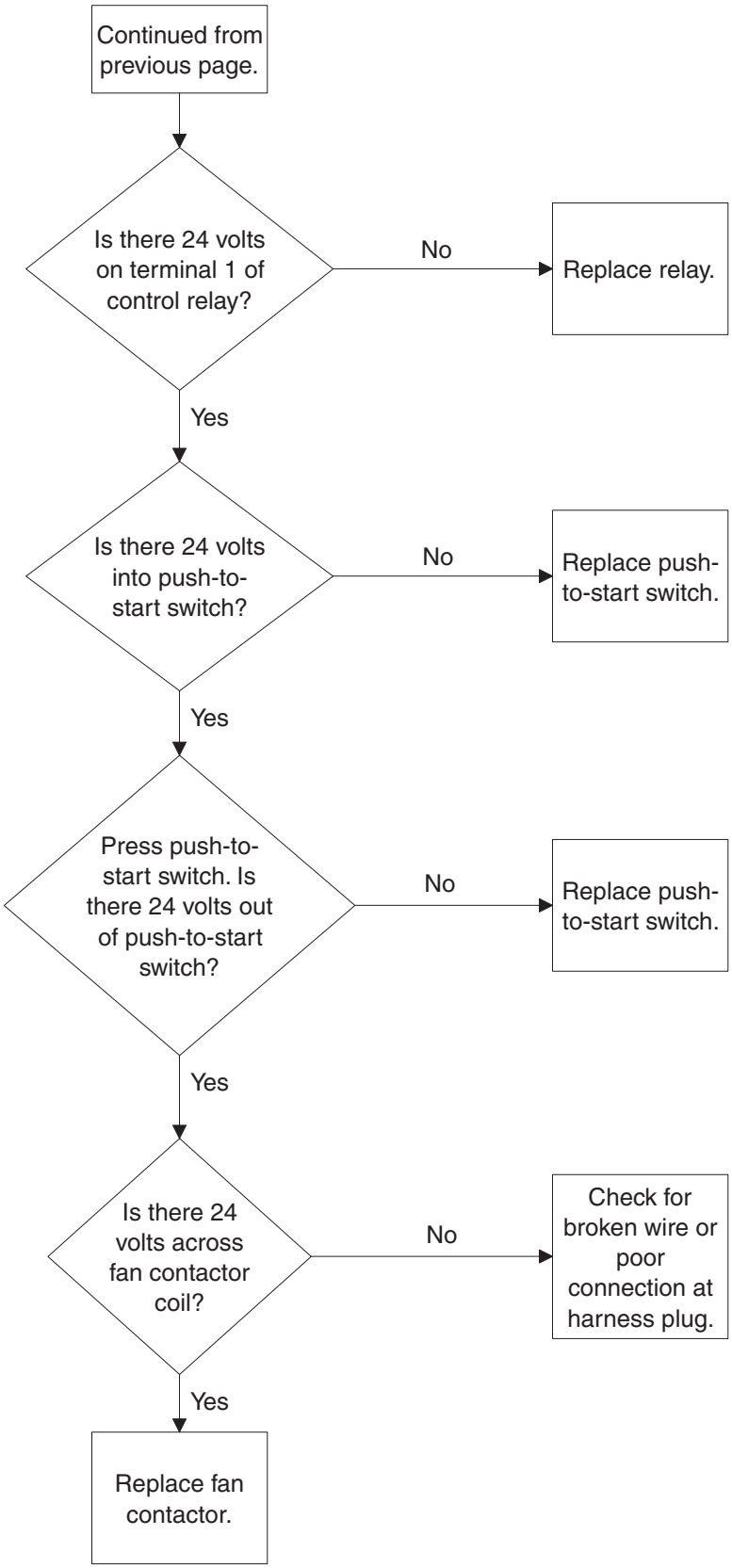

TMB1931S-b

18. Motor Runs But Will Not Heat

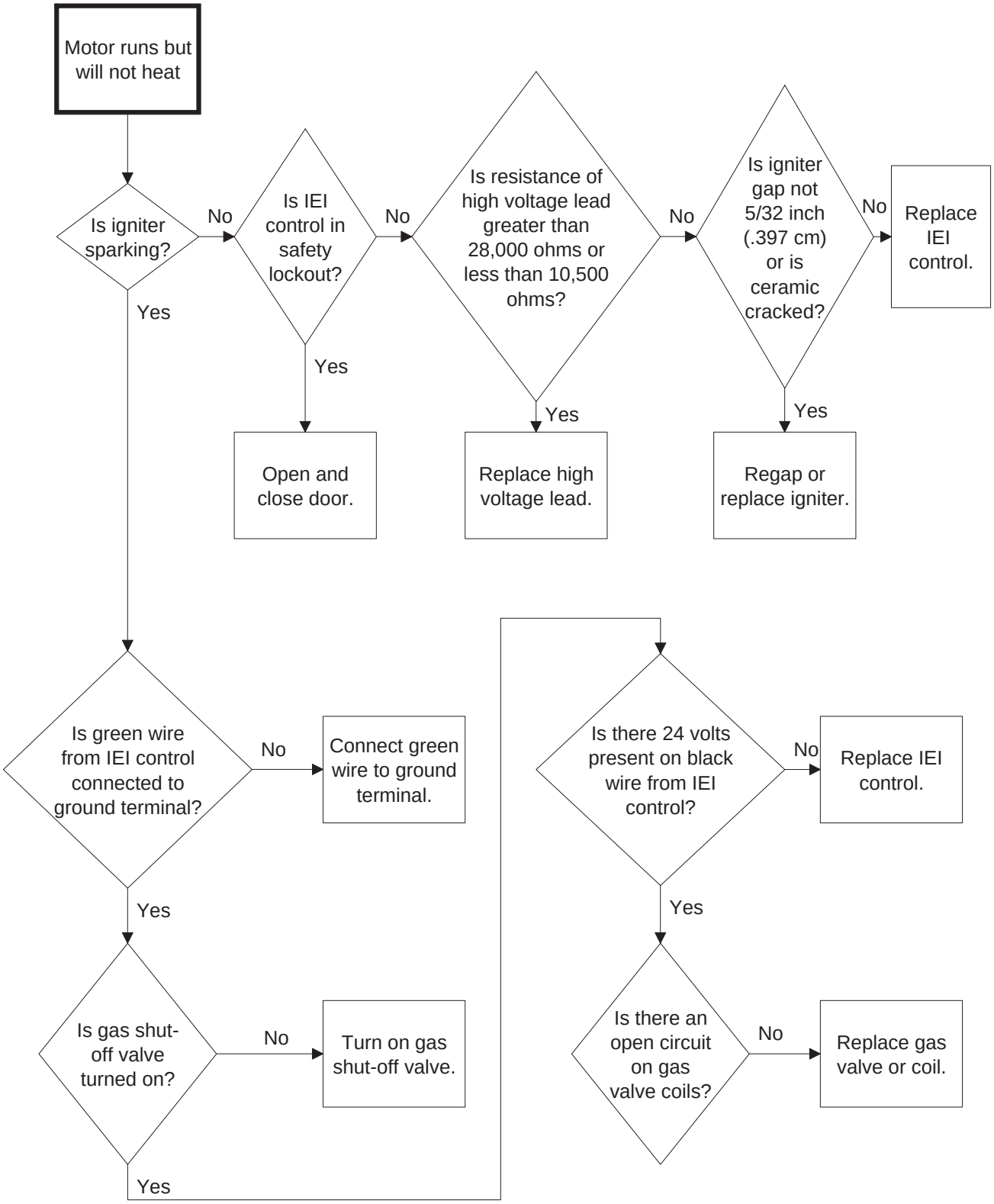

TMB1932S

19. Cylinder Turns, But Will Not Heat

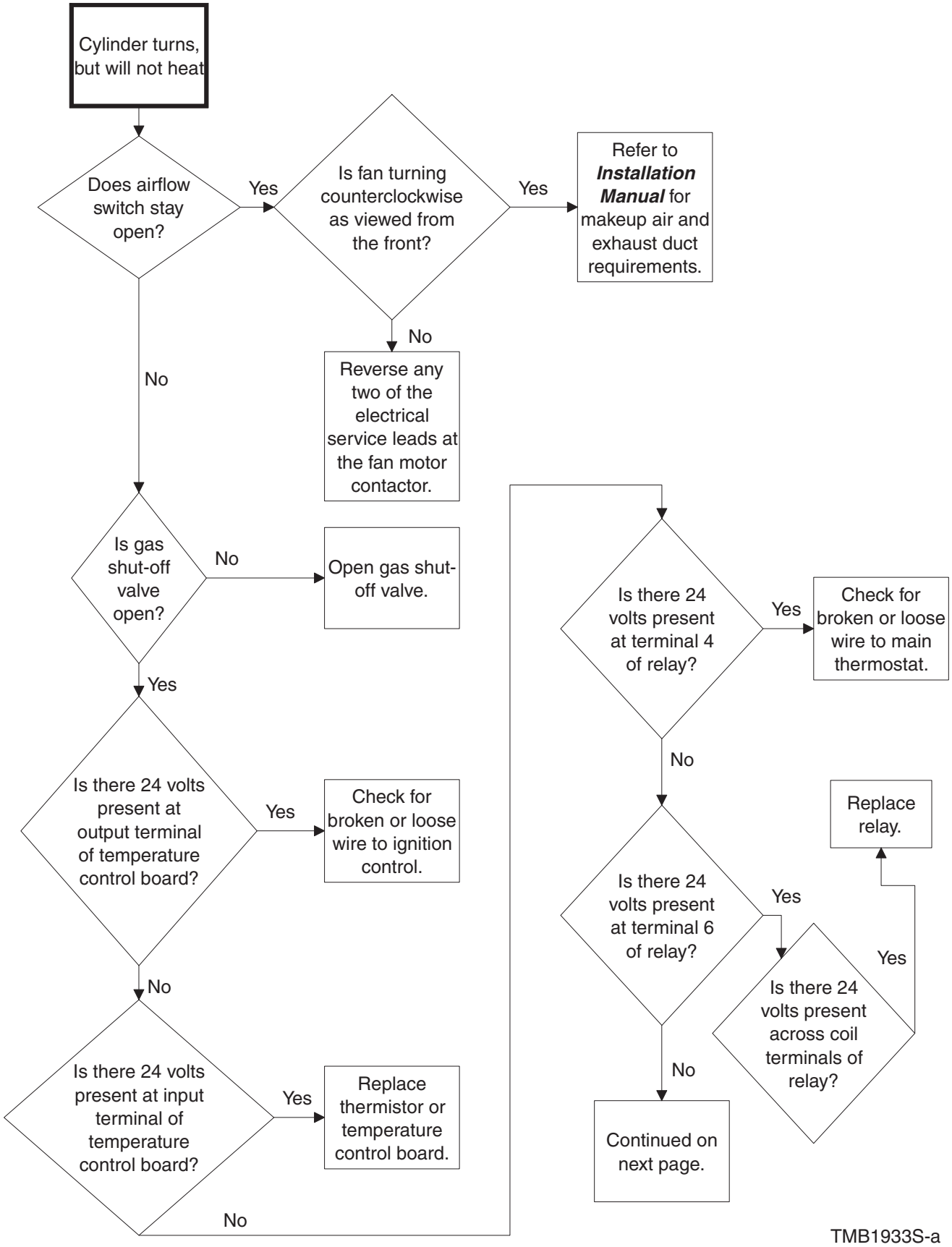

19. Cylinder Turns, But Will Not Heat (continued)

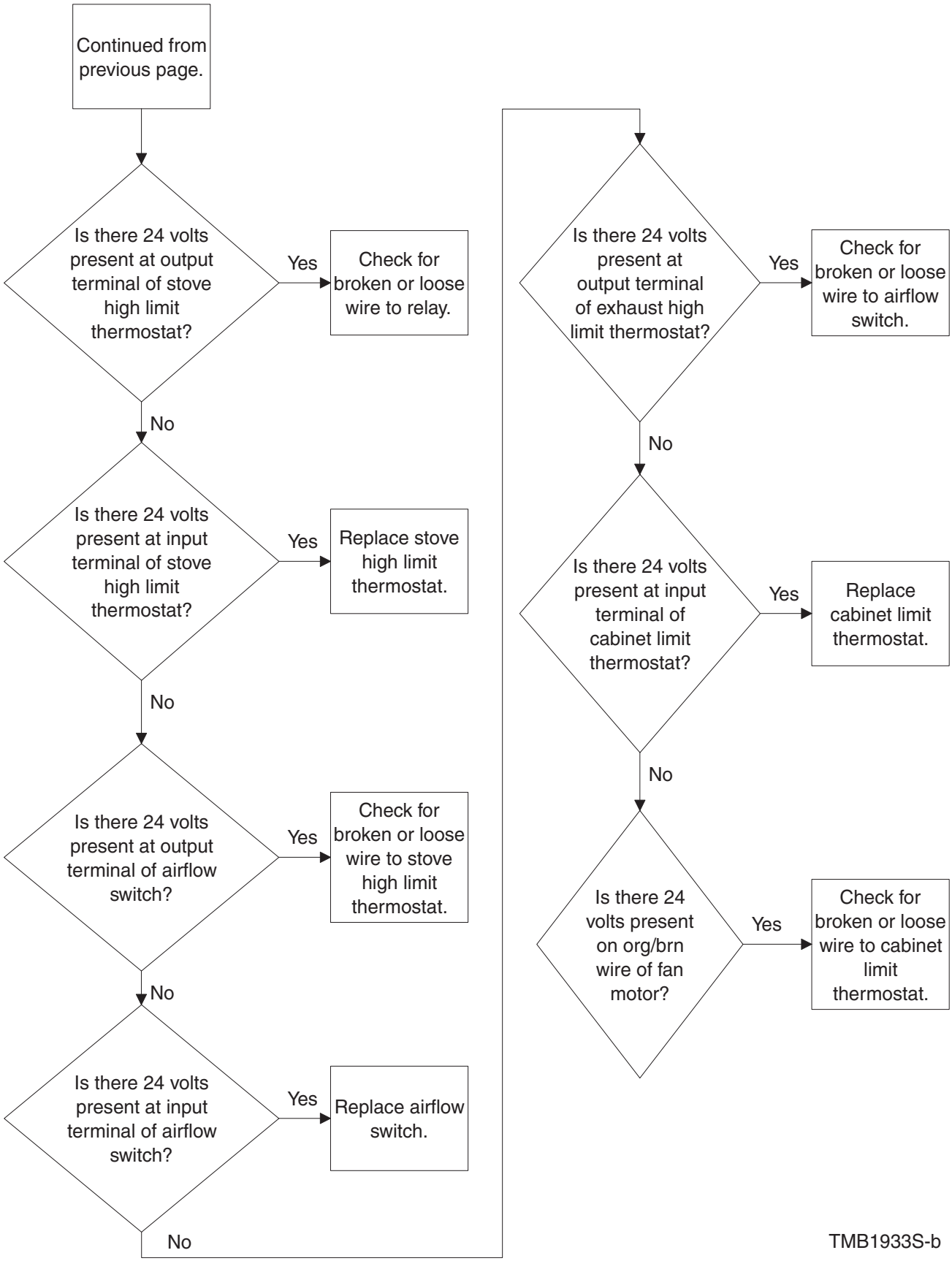

Section 4
Adjustments

WARNING

To reduce the risk of electric shock, fire, explosion, serious injury or death:
- **Disconnect electric power to the tumble dryer before servicing.**
- **Close gas shut-off valve to gas tumble dryer before servicing.**
- **Close steam valve to steam tumble dryer before servicing.**
- **Never start the tumble dryer with any guards/panels removed.**
- **Whenever ground wires are removed during servicing, these ground wires must be reconnected to ensure that the tumble dryer is properly grounded.**

W002R1

20. Main Gas Burner Air Inlet Shutters (All Gas Models)

Refer to *Figure 1*.

CAUTION

The air inlet shutters on the burner must be adjusted so sufficient primary air is metered into the system for proper combustion and maximum efficiency. Before adjusting the inlet shutter be sure that all lint is removed from lint compartment and lint screen.

W281

Air inlet shutter adjustments will vary from location to location and will depend on the vent system, number of units installed, make-up air and line gas pressure. Opening the shutter increases the amount of primary air supplied to the burner while closing the shutter decreases the air supply. Adjust the air shutter as follows:

a. Remove access panel.
b. Start tumble dryer and check the flame pattern. Correct air and gas mixture is indicated if the flame pattern is primarily blue, with small yellow tips, and bends to the left of the heater section. Too little air is indicated if the flame is yellow, lazy and smokey.
c. To adjust the air inlet shutter, loosen locking screw.
d. Slide shutter in or out as necessary to obtain desired flame intensity.
e. After shutter is adjusted, tighten locking screw securely.
f. If the flame pattern is straight up, insufficient air is flowing through the tumble dryer. A flame pattern that flares to the right and left indicates that no air is flowing through the tumble dryer.

WARNING

To reduce the risk of electric shock, fire, explosion, serious injury or death:
- **Disconnect electric power to the tumble dryer before servicing.**
- **Close gas shut-off valve to gas tumble dryer before servicing.**
- **Close steam valve to steam tumble dryer before servicing.**
- **Never start the tumble dryer with any guards/panels removed.**
- **Whenever ground wires are removed during servicing, these ground wires must be reconnected to ensure that the tumble dryer is properly grounded.**

W002R1

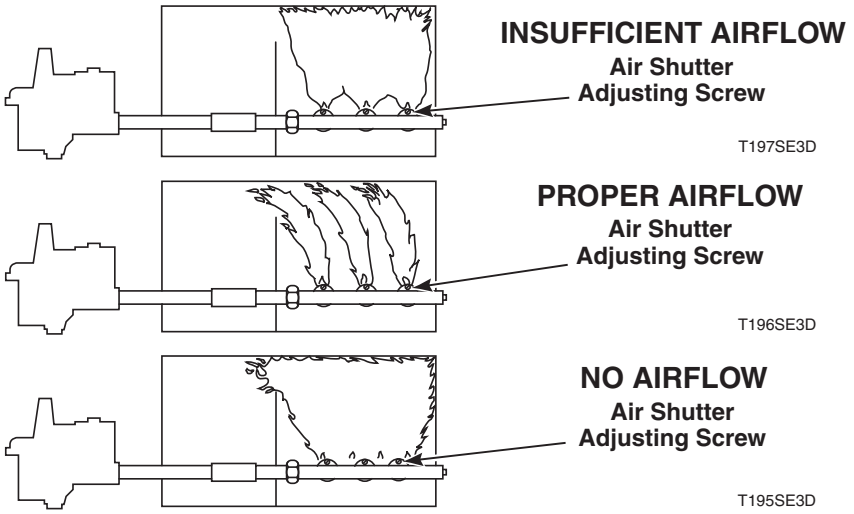

Figure 1

21. Airflow Switch

The airflow switch is set at the factory for proper operation. No adjustment necessary.

IMPORTANT: Airflow switch vane must remain closed during operation. If it opens and closes during the drying cycle, this indicates insufficient airflow through the tumble dryer. If switch remains open, or pops open and closed during the cycle, the heating system will shut off. The cylinder and fan will continue to operate even though the airflow switch is indicating insufficient airflow.

22. Loading Door Strike

Refer to *Figure 2*.

The door strike must be adjusted so it has sufficient tension to hold loading door closed against the force of a tumbling load. The door strike is properly adjusted when 8-15 lbs. (17.6-33 kg) of pull is required to open door.

To adjust, open door, loosen nut and turn door strike screw in for less tension or out for more tension. Tighten nut. Refer to *Figure 2*.

WARNING

To reduce the risk of electric shock, fire, explosion, serious injury or death:
- **Disconnect electric power to the tumble dryer before servicing.**
- **Close gas shut-off valve to gas tumble dryer before servicing.**
- **Close steam valve to steam tumble dryer before servicing.**
- **Never start the tumble dryer with any guards/panels removed.**
- **Whenever ground wires are removed during servicing, these ground wires must be reconnected to ensure that the tumble dryer is properly grounded.**

W002R1

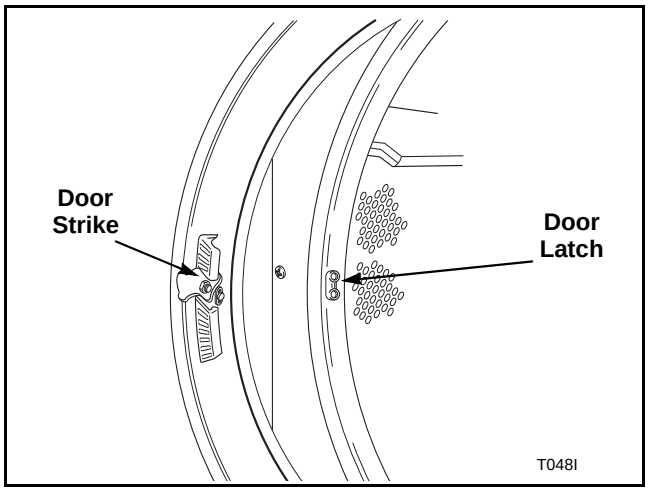

Figure 2

23. Cylinder Belt Tension

120 Pound Models:

NOTE: Belt tension from step pulley to cylinder shaft pulley can be measured to ensure proper installation in one of the following ways:

- **Burroughs Belt Tension Gauge initial reading 70-80 pounds.**
- **Force to deflect belt .38 inch at midspan with initial tensioning 6.5 pounds.**
- **Burroughs Belt Tension Gauge reading after run 55-65 pounds.**

170 Pound Models:

NOTE: Belt tension from cylinder drive motor pulley to step pulley can be measured to ensure proper installation in one of the following ways:

- **Burroughs Belt Tension Gauge initial reading 60-70 pounds.**
- **Force to deflect belt .38 inch at midspan with initial tensioning 6.0 pounds**
- **Burroughs Belt Tension Gauge reading after run 45-55 pounds.**

WARNING

To reduce the risk of electric shock, fire, explosion, serious injury or death:
- **Disconnect electric power to the tumble dryer before servicing.**
- **Close gas shut-off valve to gas tumble dryer before servicing.**
- **Close steam valve to steam tumble dryer before servicing.**
- **Never start the tumble dryer with any guards/panels removed.**
- **Whenever ground wires are removed during servicing, these ground wires must be reconnected to ensure that the tumble dryer is properly grounded.**

W002R1

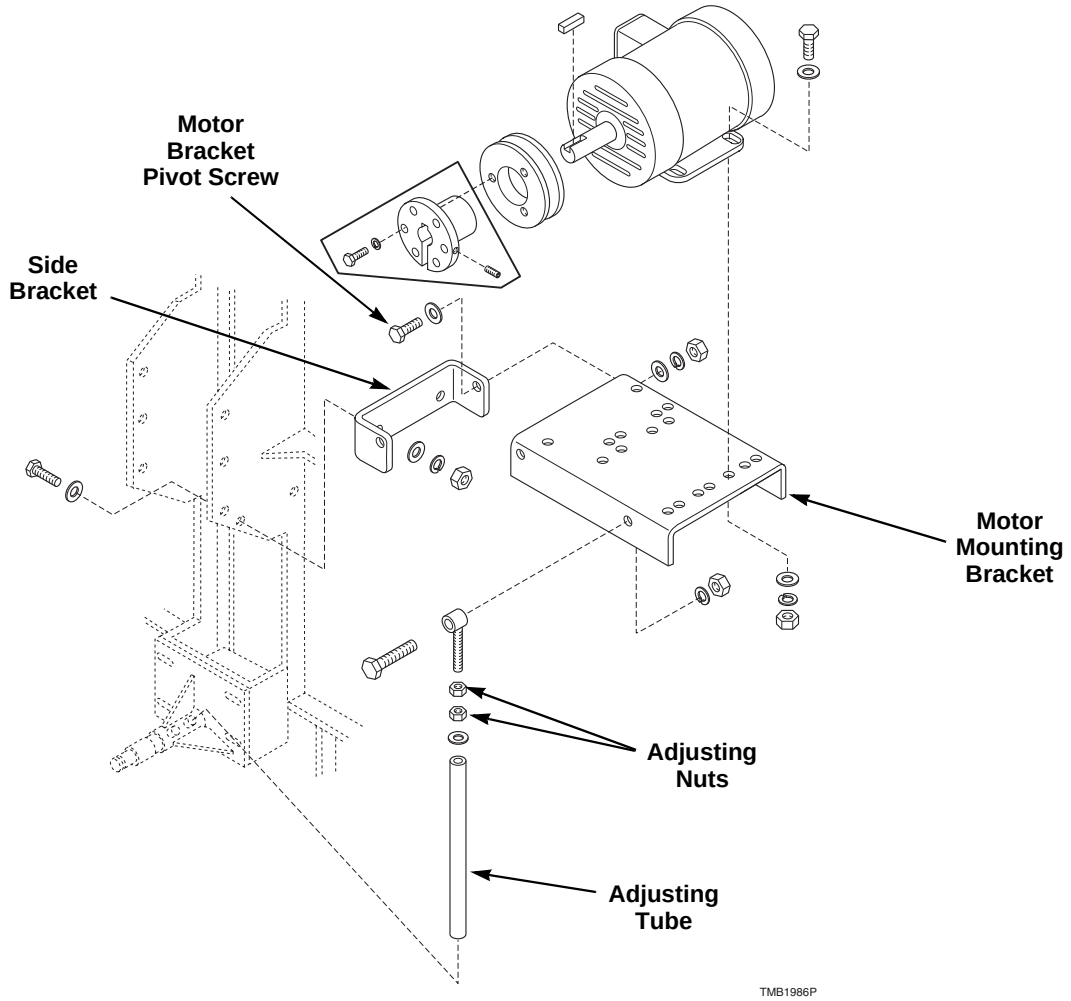

Figure 3

a. Support corner drive guard and remove screws holding corner guard to rear of tumble dryer.
b. Support drive guard cover and remove screws that hold guard to rear of tumble dryer.
c. Loosen the four jackshaft assembly attaching screws. Refer to *Figure 4*.
d. Loosen adjusting nuts on outer eyebolt and rotate bottom nut clockwise until proper tension is reached.
e. Retighten all nuts and screws.
f. Readjust drive belt.

WARNING

To reduce the risk of electric shock, fire, explosion, serious injury or death:
- **Disconnect electric power to the tumble dryer before servicing.**
- **Close gas shut-off valve to gas tumble dryer before servicing.**
- **Close steam valve to steam tumble dryer before servicing.**
- **Never start the tumble dryer with any guards/panels removed.**
- **Whenever ground wires are removed during servicing, these ground wires must be reconnected to ensure that the tumble dryer is properly grounded.**

W002R1

IMPORTANT: Adjusting the cylinder belt tension WILL AFFECT the drive belt tension. You MUST check and readjust the drive belt tension after adjusting the cylinder belt tension.

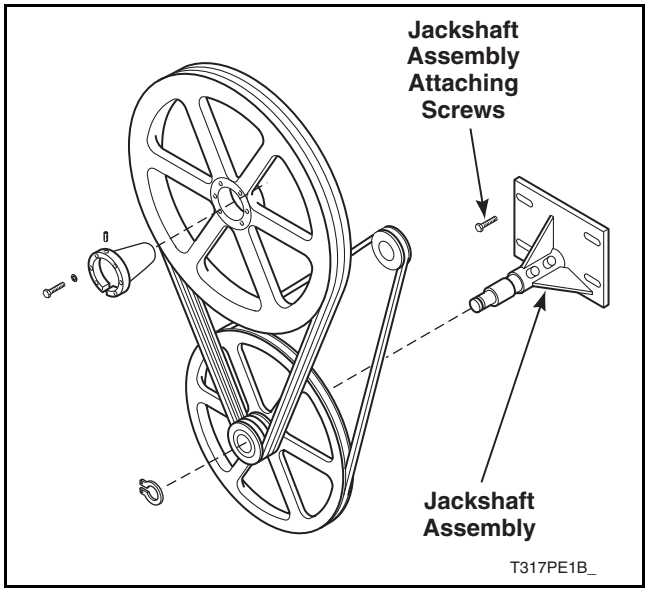

Figure 4

24. Cylinder Clearance

The clearance between the cylinder rim and front panel must be adjusted so the cylinder is centered within the front panel opening when the cylinder is fully loaded and is turning. However, the adjustment should be made when the cylinder is empty.

NOTE: If the cylinder is not properly adjusted, the cylinder rim will rub against the front panel.

a. Open loading door.
b. Check the gap between the center of the front panel top flange and the cylinder rim. Proper adjustment is when the gap is 8/32 inch ± 3/32 inch. Refer to *Figure 5*. Perform steps d through i to adjust the cylinder rim/front panel flange clearance.
c. Check the cylinder fore/aft clearance between the inside front of the cylinder and the edge of the front panel flange. Proper adjustment is when the gap is 9/32 inch ± 1/32 inch. Refer to *Figure 5*. Perform steps j through n to adjust the cylinder fore/aft clearance.

Cylinder Rim/Front Panel Flange Clearance Adjustment

a. Support corner drive guard and remove screws holding corner guard to rear of tumble dryer.
b. Support drive guard cover and remove screws holding guard to rear of tumble dryer.
c. Loosen rear bearing mounting screws. Refer to *Figure 6*.
d. Loosen the locknuts on rear adjustment screws. Refer to *Figure 6*.
e. Turn the adjusting screws in or out as necessary to obtain proper clearance between cylinder rim and front panel.

NOTE: Turning the adjusting screws clockwise will raise the cylinder and turning them counter-clockwise will lower the cylinder. Turn both screws evenly to adjust top and bottom clearance. Turn one or the other adjusting screw in or out to adjust side clearance.

f. After the cylinder is properly adjusted, tighten the adjusting screw locknuts and the rear bearing mounting screws.
g. Install drive guard cover.

NOTE: If adjusting the trunnion housing fails to correct the clearance, the problem is probably due to a worn trunnion shaft or defective bearings.

WARNING

To reduce the risk of electric shock, fire, explosion, serious injury or death:
- **Disconnect electric power to the tumble dryer before servicing.**
- **Close gas shut-off valve to gas tumble dryer before servicing.**
- **Close steam valve to steam tumble dryer before servicing.**
- **Never start the tumble dryer with any guards/panels removed.**
- **Whenever ground wires are removed during servicing, these ground wires must be reconnected to ensure that the tumble dryer is properly grounded.**

W002R1

Cylinder Fore/Aft Clearance Adjustment

h. Support corner drive guard and remove screws holding corner guard to rear of tumble dryer.
i. Support drive guard cover and remove screws holding guard to rear of tumble dryer.
j. Loosen setscrews in the front bearing assembly collar and rear bearing assembly collar. Refer to *Figure 6*.
k. Move cylinder assembly in or out as necessary to obtain proper clearance between the cylinder and the front panel.
l. After the cylinder is properly adjusted, tighten setscrews in the front and rear bearing assembly collars.
m. Install drive guard cover.

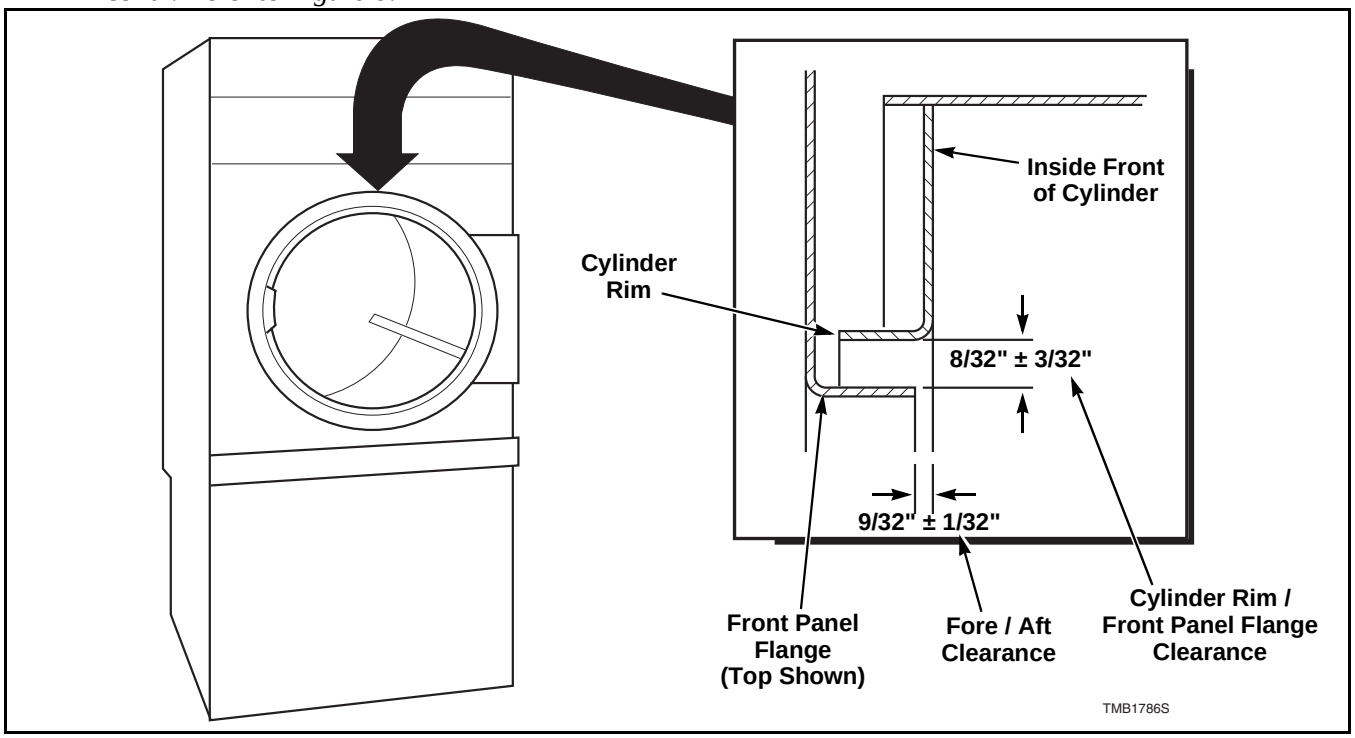

Figure 5

WARNING

To reduce the risk of electric shock, fire, explosion, serious injury or death:
- **Disconnect electric power to the tumble dryer before servicing.**
- **Close gas shut-off valve to gas tumble dryer before servicing.**
- **Close steam valve to steam tumble dryer before servicing.**
- **Never start the tumble dryer with any guards/panels removed.**
- **Whenever ground wires are removed during servicing, these ground wires must be reconnected to ensure that the tumble dryer is properly grounded.**

W002R1

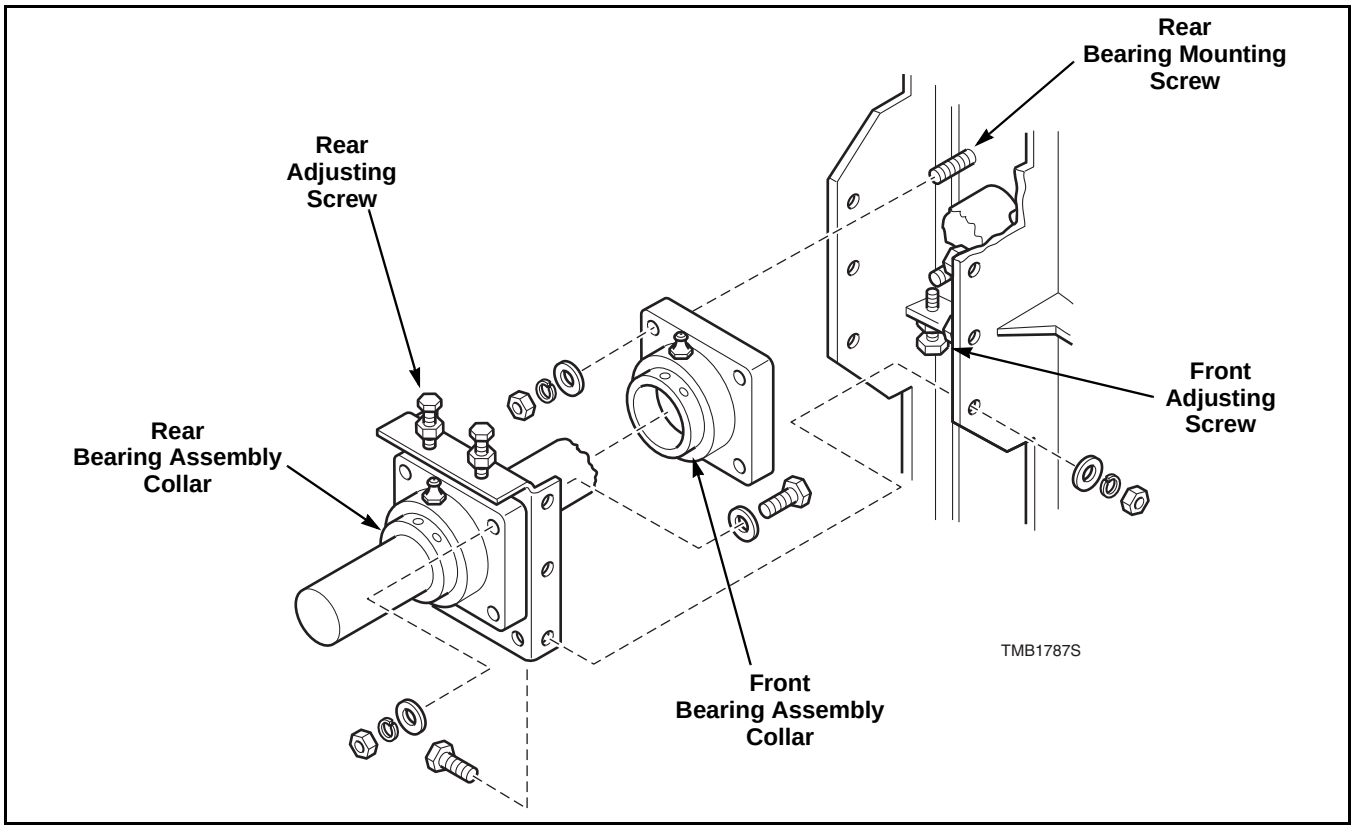

Figure 6

25. Drive Belt Tension

Refer to *Figure 3*.

NOTE: If cylinder belts will be adjusted, service them before drive belt.

120 Pound Models:

NOTE: Belt tension from step pulley to cylinder shaft pulley can be measured to ensure proper installation in one of the following ways:

- **Burroughs Belt Tension Gauge initial reading 70-80 pounds.**
- **Force to deflect belt .38 inch at midspan with initial tensioning 6.5 pounds.**
- **Burroughs Belt Tension Gauge reading after run 55-65 pounds.**

170 Pound Models:

NOTE: Belt tension from cylinder drive motor pulley to step pulley can be measured to ensure proper installation in one of the following ways:

- **Burroughs Belt Tension Gauge initial reading 60-70 pounds.**
- **Force to deflect belt .38 inch at midspan with initial tensioning 6.0 pounds**
- **Burroughs Belt Tension Gauge reading after run 45-55 pounds.**

WARNING

To reduce the risk of electric shock, fire, explosion, serious injury or death:
- **Disconnect electric power to the tumble dryer before servicing.**
- **Close gas shut-off valve to gas tumble dryer before servicing.**
- **Close steam valve to steam tumble dryer before servicing.**
- **Never start the tumble dryer with any guards/panels removed.**
- **Whenever ground wires are removed during servicing, these ground wires must be reconnected to ensure that the tumble dryer is properly grounded.**

W002R1

a. Support corner drive guard and remove screws holding corner guard to rear of tumble dryer.
b. Support drive guard cover and remove screws holding guard to rear of tumble dryer.
c. Reinstall drive guard.
d. Loosen the two motor bracket pivot screws. Refer to *Figure 3*.
e. Turn the adjusting nuts clockwise until proper tension is reached. Refer to *Figure 3*.
f. Retighten all nuts and screws.

26. Fan Belt Tension

Refer to *Figure 7*.

120 Pound Models:

NOTE: Belt tension from fan motor pulley to fan shaft pulley can be measured to ensure proper installation in one of the following ways:
- **Burroughs Belt Tension Gauge initial reading 60-70 pounds.**
- **Force to deflect belt .38 inch at midspan with initial tensioning 7.0 pounds**
- **Burroughs Belt Tension Gauge reading after run 50-55 pounds.**

170 Pound Models:

NOTE: Belt tension from fan motor pulley to fan shaft pulley can be measured to ensure proper installation in one of the following ways:
- **Burroughs Belt Tension Gauge initial reading 75-80 pounds.**
- **Force to deflect belt .38 inch at midspan with initial tensioning 5.0 pounds**
- **Burroughs Belt Tension Gauge reading after run 60-65 pounds.**

a. Support corner drive guard and remove screws holding corner guard to rear of tumble dryer.
b. Support drive guard cover and remove screws holding guard to rear of tumble dryer.
c. Loosen the two mounting bracket attaching screws.
d. Raise or lower eye bolt until proper tension is reached.
e. Retighten all nuts and screws.

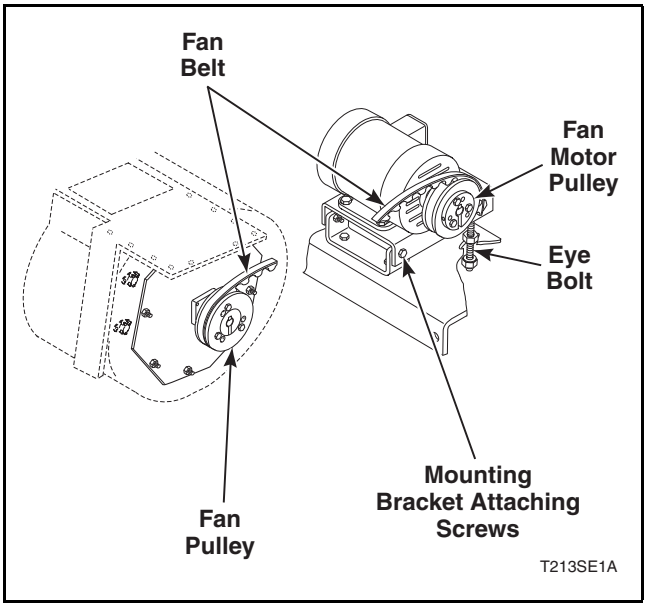

Figure 7

Section 5
Hybrid Timer Control Troubleshooting

WARNING

To reduce the risk of electric shock, fire, explosion, serious injury or death:
- **Disconnect electric power to the tumble dryer before servicing.**
- **Close gas shut-off valve to gas tumble dryer before servicing.**
- **Close steam valve to steam tumble dryer before servicing.**
- **Never start the tumble dryer with any guards/panels removed.**
- **Whenever ground wires are removed during servicing, these ground wires must be reconnected to ensure that the tumble dryer is properly grounded.**

W002R1

27. Control Has No Display – OPL Models

Control Has No Display – OPL Models

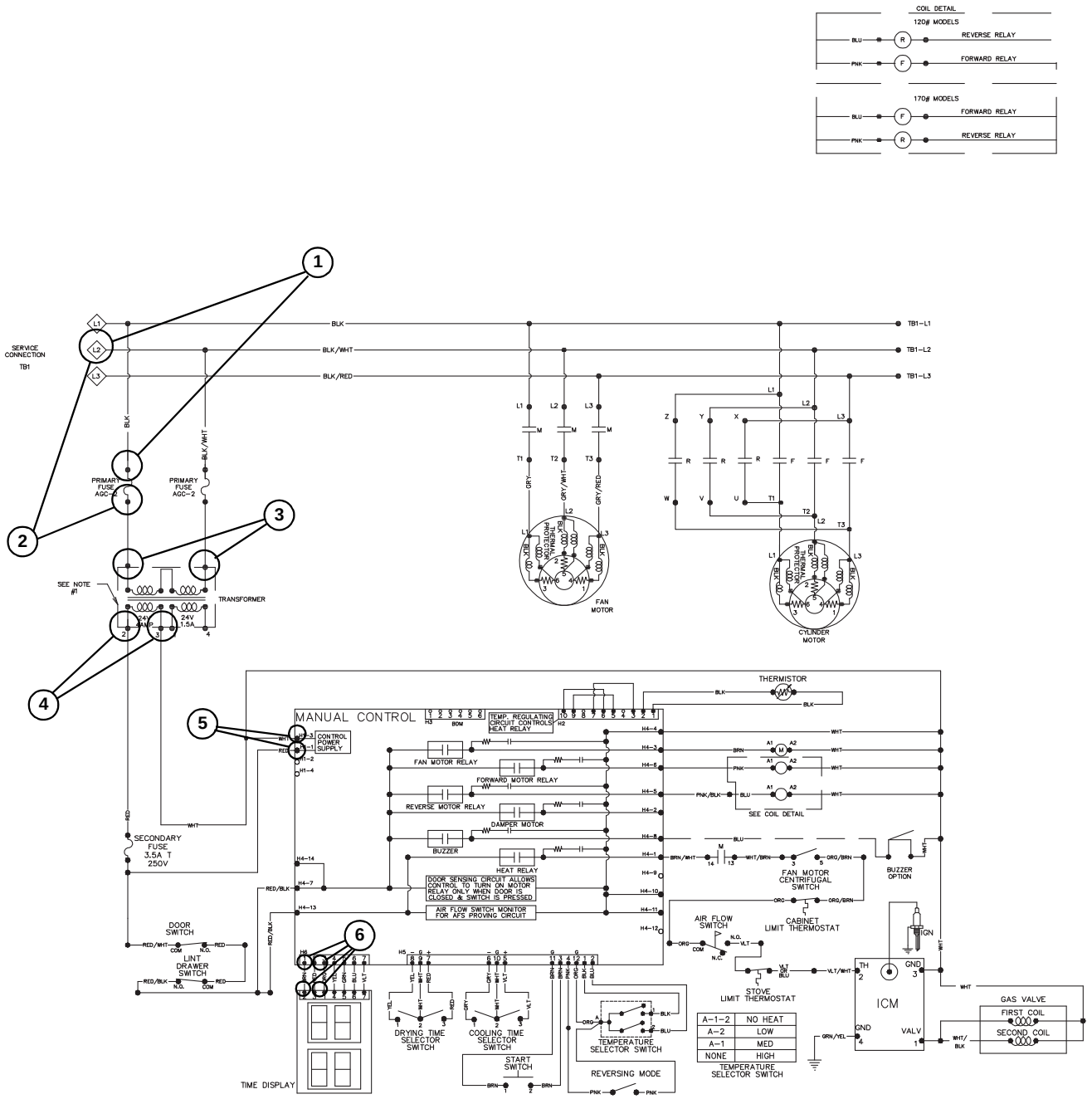

28. Display Flashes “dr” With Door Closed – OPL Models

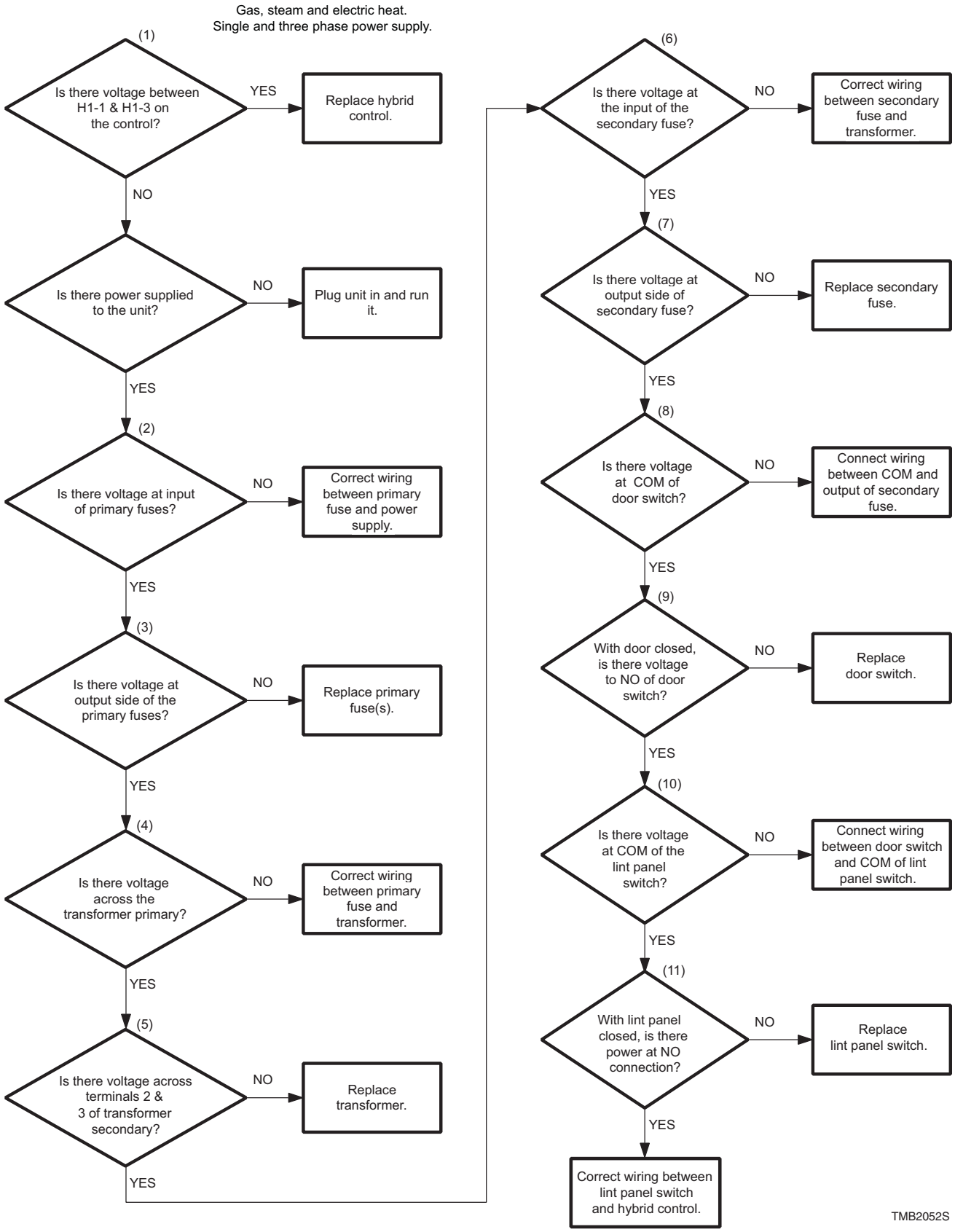

Display Flashes “dr” With Door Closed – OPL Models

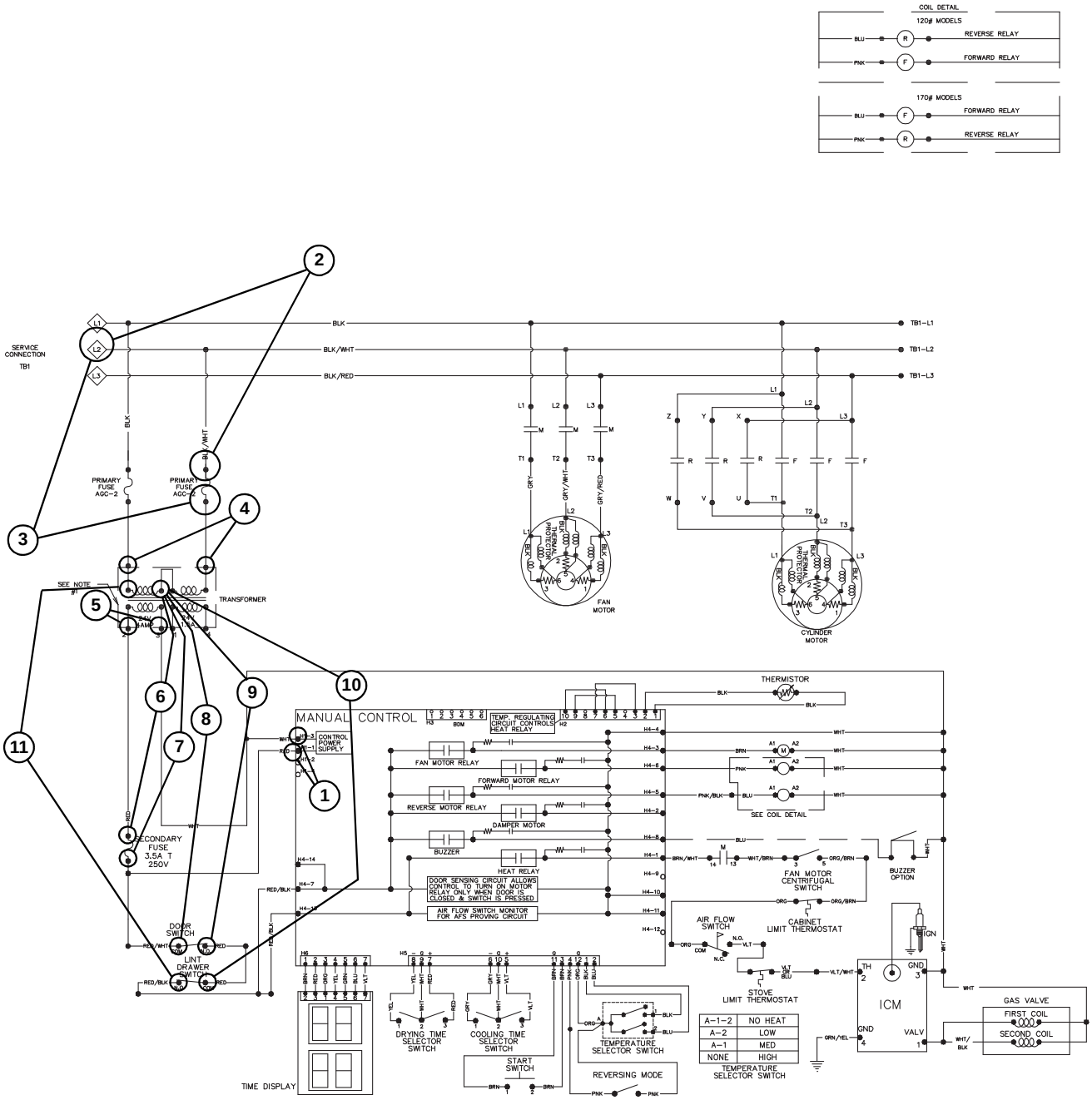

29. Motor Will Not Start/Run – OPL Models

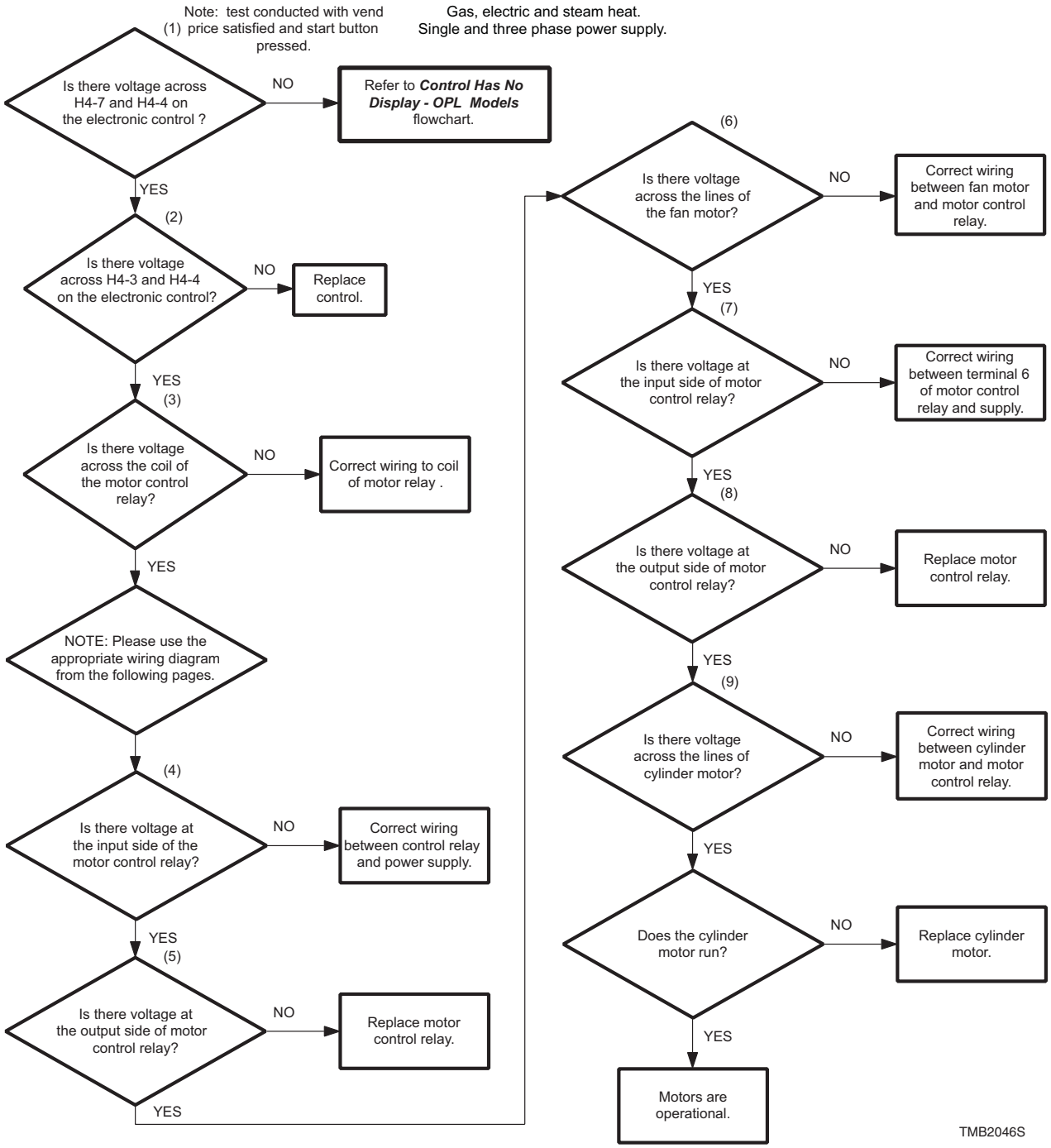

Please see following 1 page for wiring diagram information.

Motor Will Not Start/Run – OPL Models

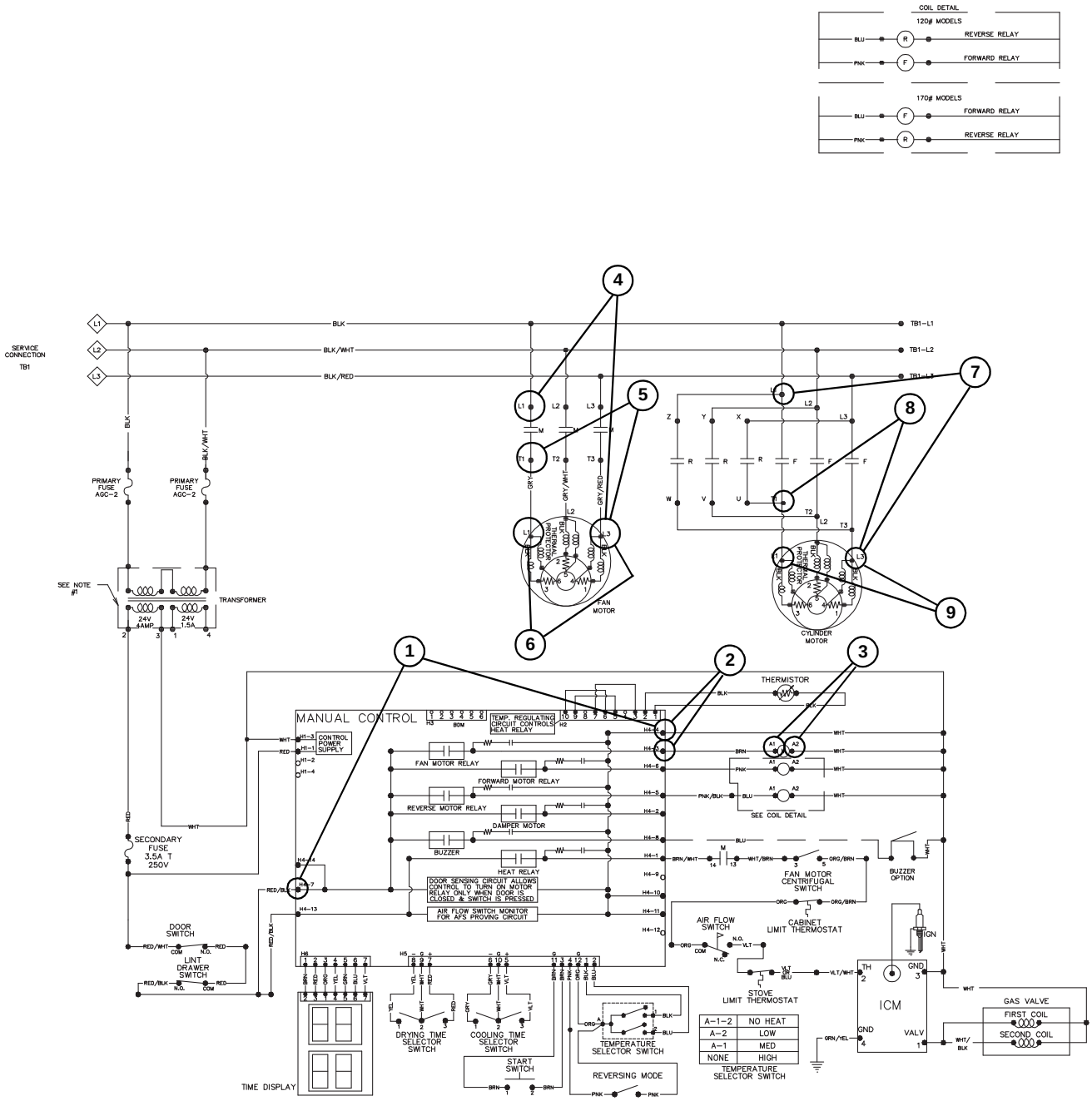

TMB2113S

30. Unit Will Not Heat – Gas – OPL Models

Note: Tests are conducted with unit running and calling for heat.

All voltage checks are referenced to transformer neutral.

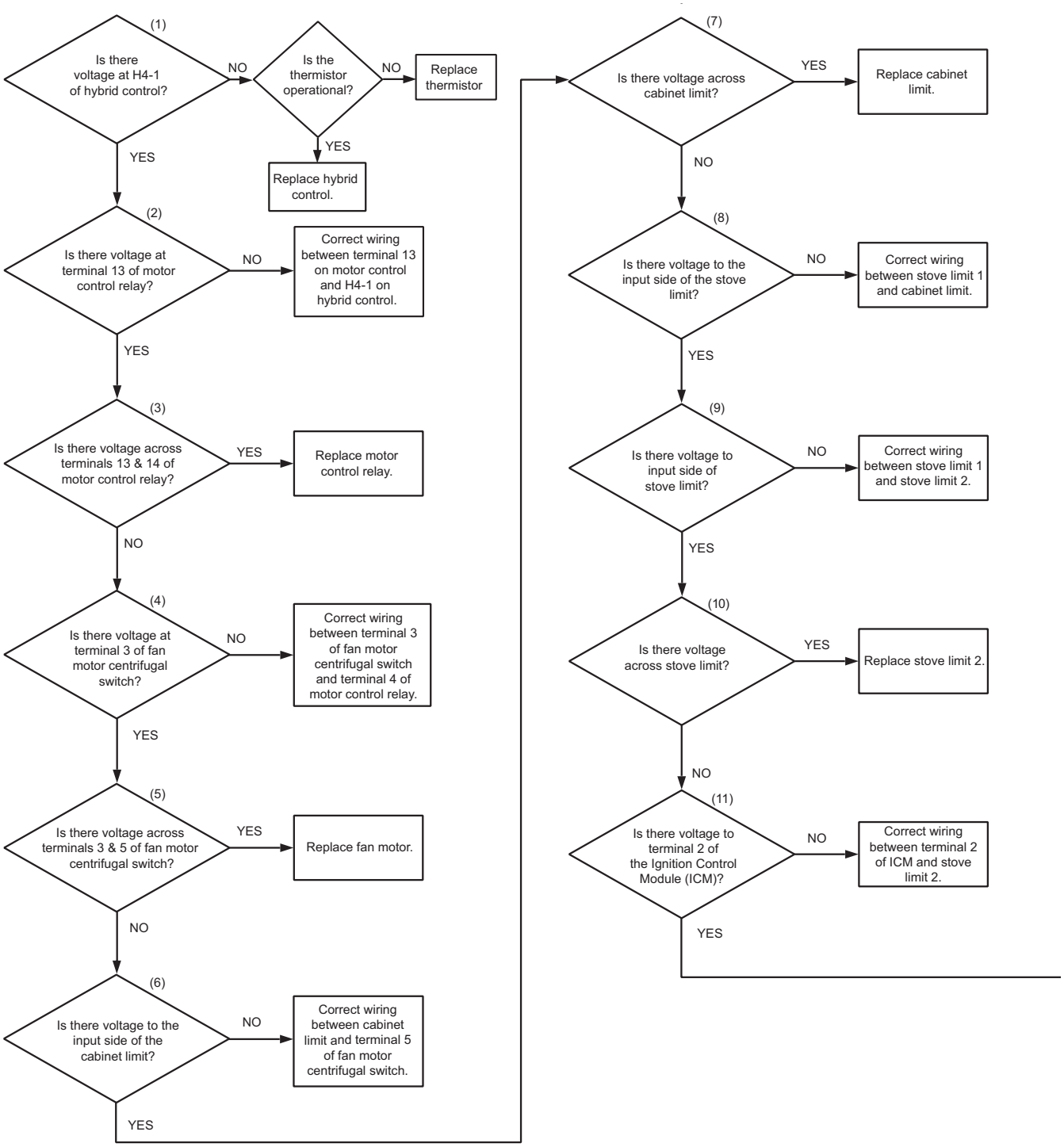

30. Unit Will Not Heat – Gas – OPL Models (continued)

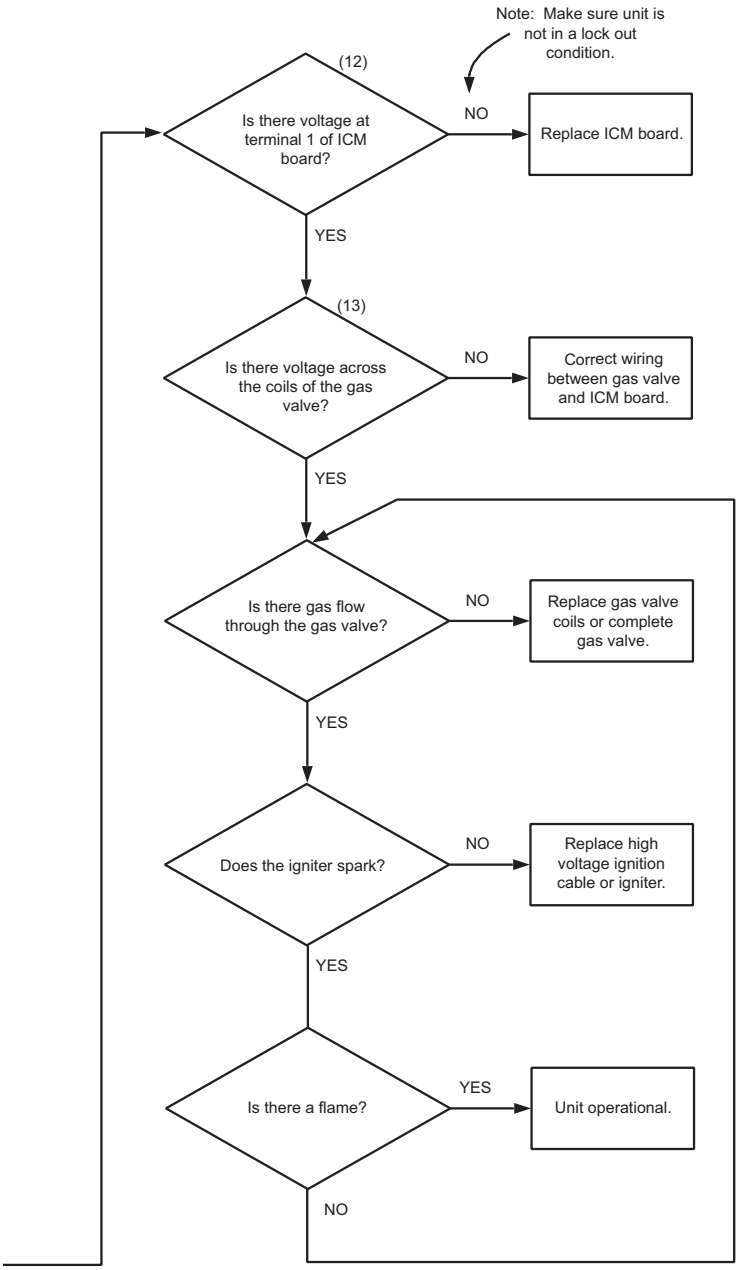

TMB2114S

Please see following page for wiring diagram information.

Unit Will Not Heat – Gas – OPL Models

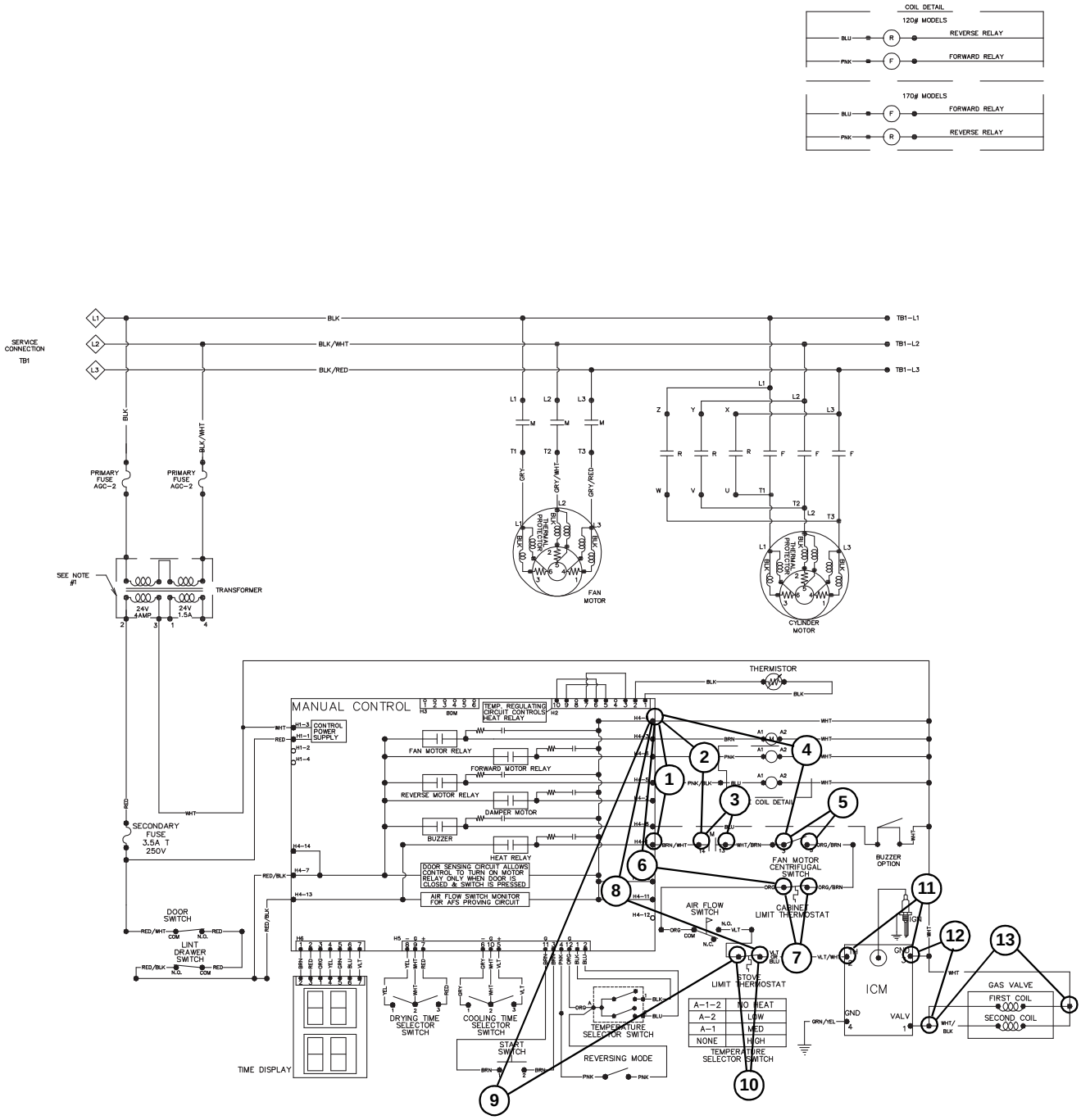

TMB2113S

31. Error Codes

Display	Definition	Corrective Action
OP	Open thermistor error.	• Check thermistor. Replace if inoperative. • Check wiring between control and thermistor. Refer to wiring diagram for proper wiring. • Check control. Replace if inoperative.
SH	Shorted thermistor error.	• Check thermistor. Replace if inoperative. • Check wiring between control and thermistor. Refer to wiring diagram for proper wiring. • Check control. Replace if inoperative.
AF-1	Airflow switch closed when cycle started.	• Check airflow switch. Replace if inoperative.
AF-2	Airflow switch failed to closed after cycle started.	• Check airflow switch. Replace if inoperative.
AF (flashing)	Airflow switch opened/closed 5 or more times in a running cycle.	• Check airflow switch. Replace if inoperative.

Section 6
On Premise Micro Control (RM) Troubleshooting

WARNING

To reduce the risk of electric shock, fire, explosion, serious injury or death:
- **Disconnect electric power to the tumble dryer before servicing.**
- **Close gas shut-off valve to gas tumble dryer before servicing.**
- **Close steam valve to steam tumble dryer before servicing.**
- **Never start the tumble dryer with any guards/panels removed.**
- **Whenever ground wires are removed during servicing, these ground wires must be reconnected to ensure that the tumble dryer is properly grounded.**

W002R1

32. Control Has No Display

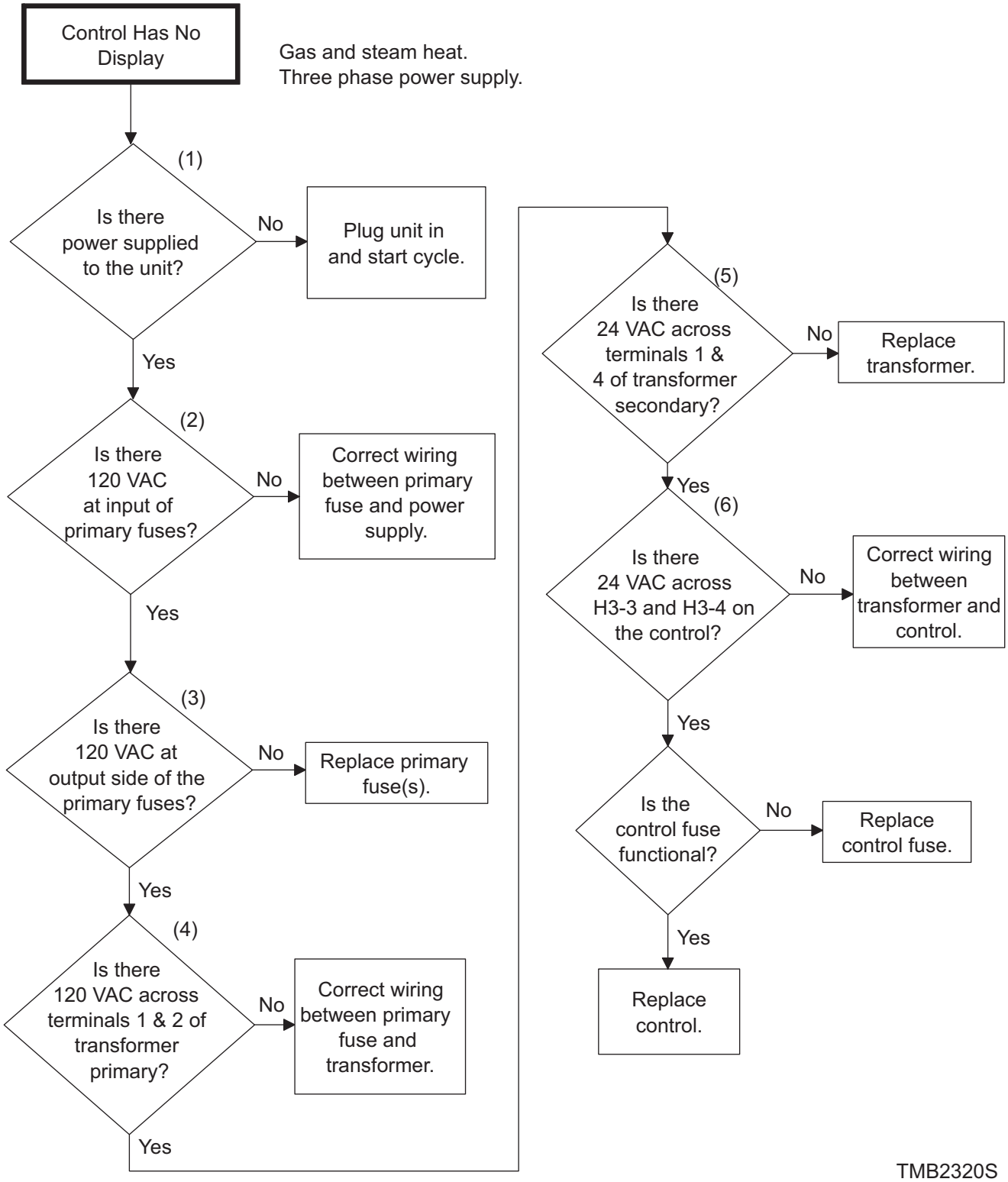

Control Has No Display

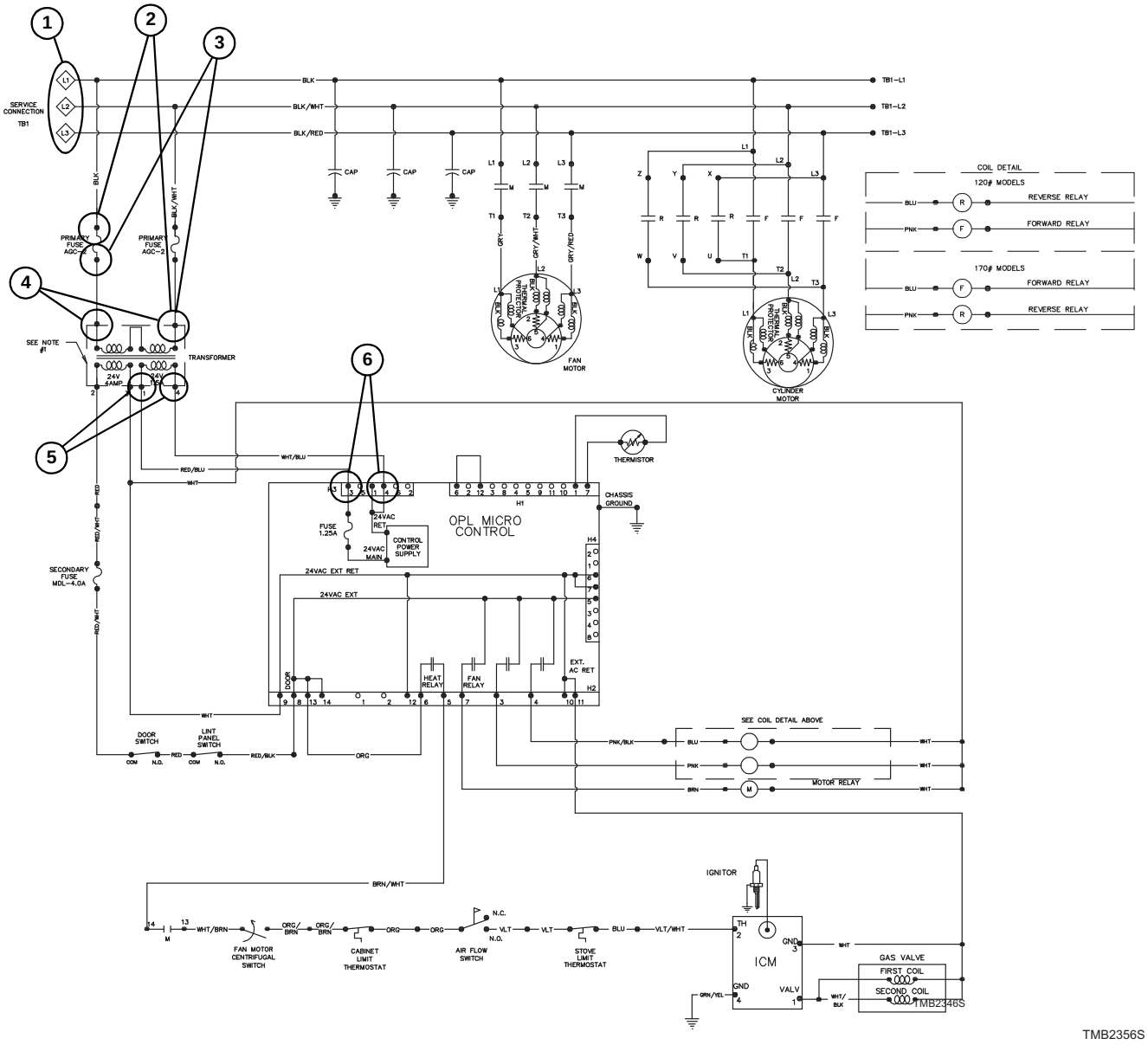

TMB2356S

33. Door Open Indicator

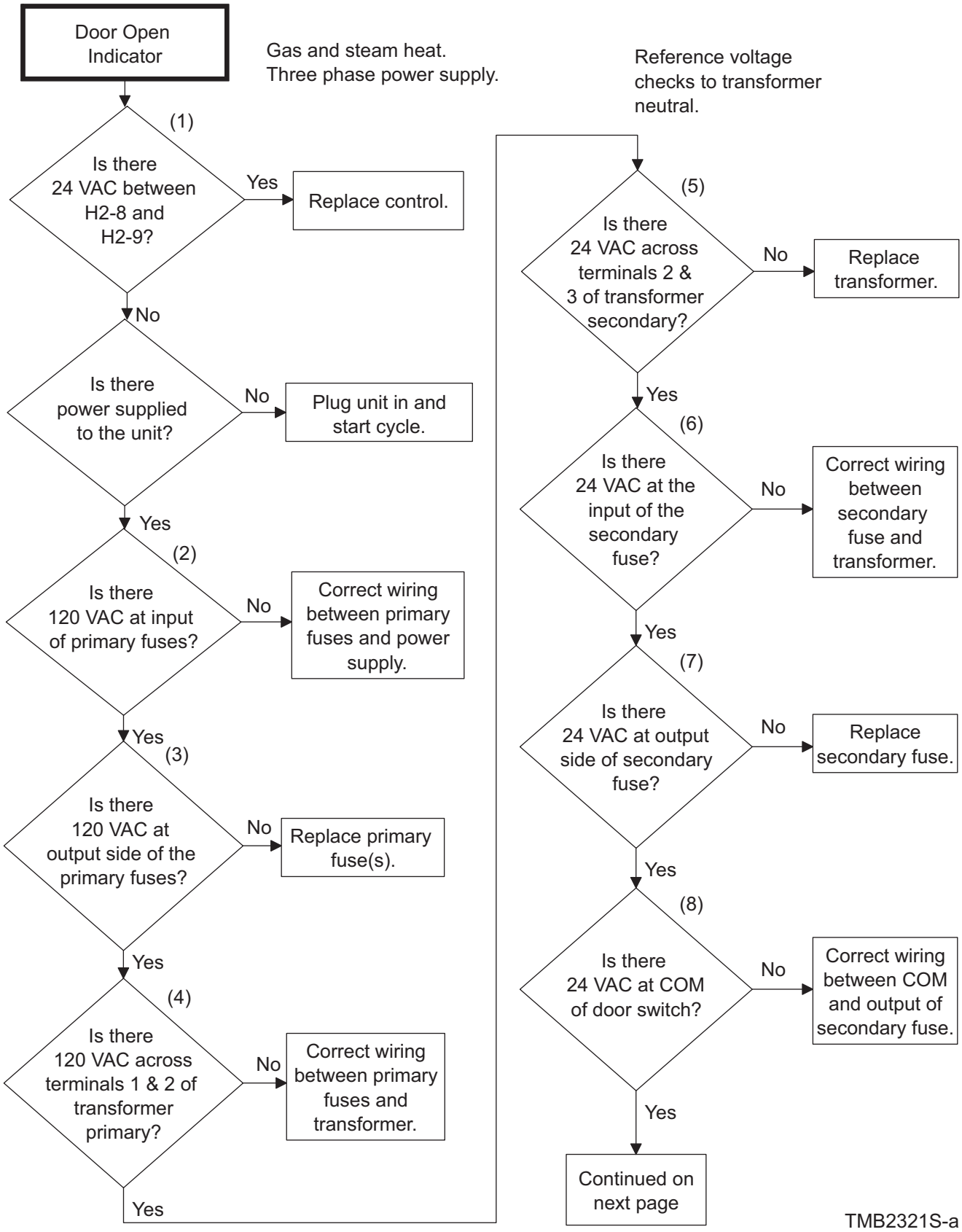

33. Door Open Indicator (continued)

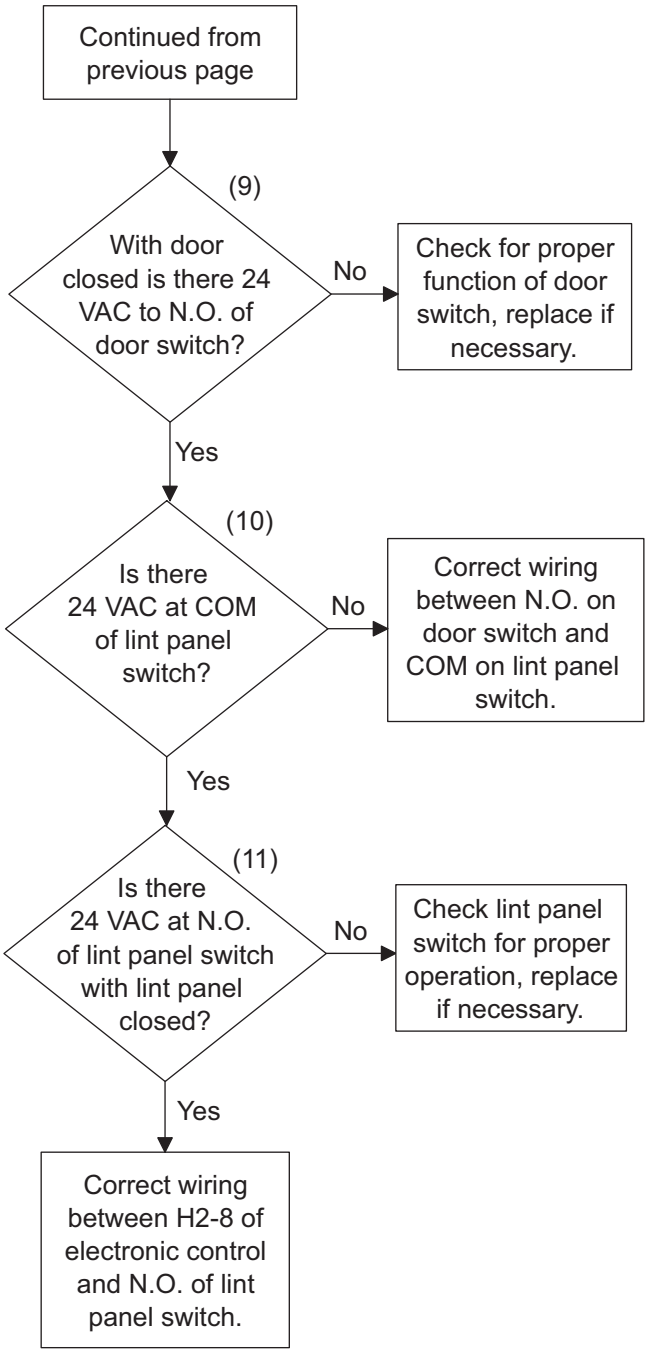

TMB2321S-b

Please see following page for wiring diagram information.

Door Open Indicator

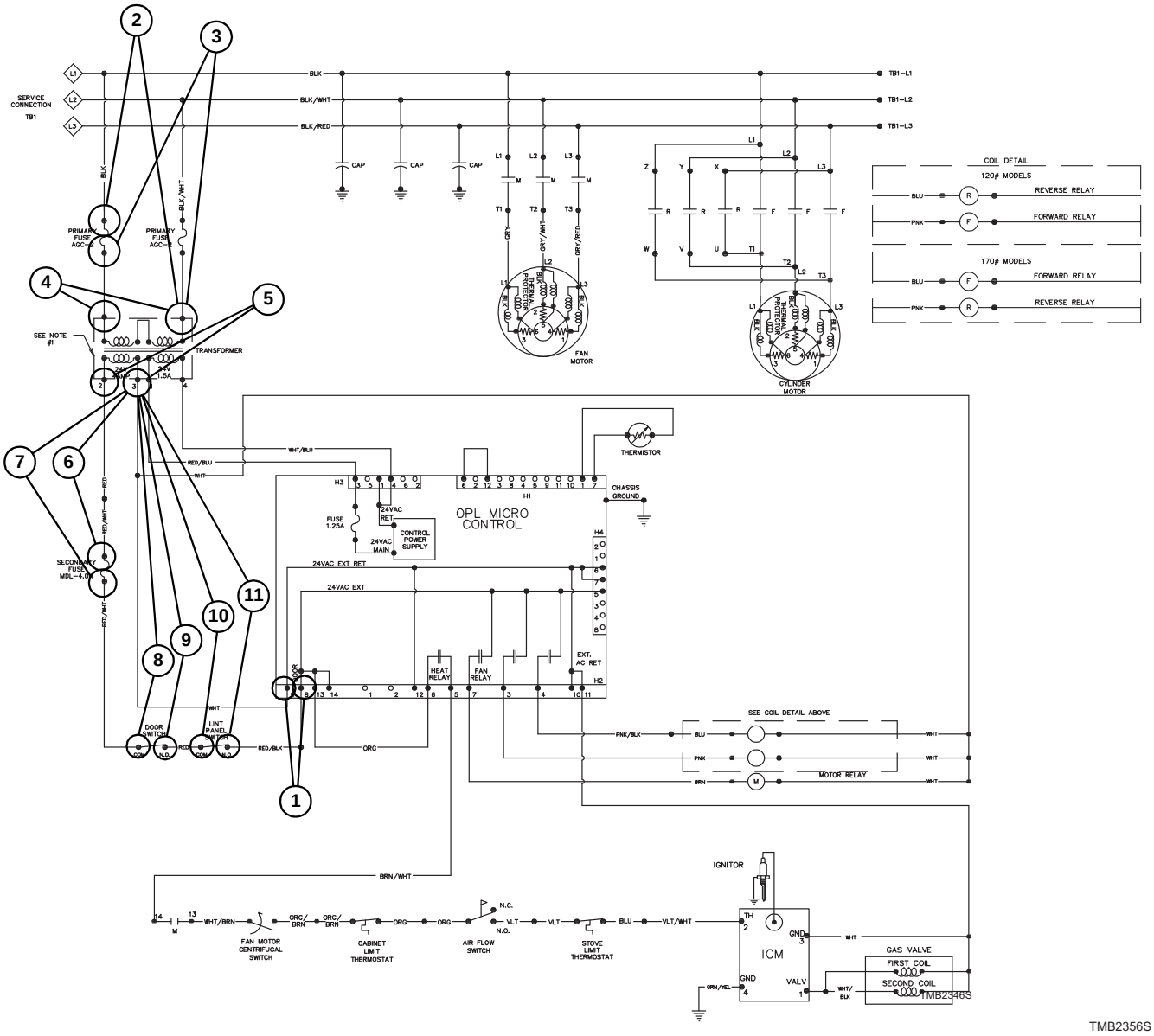

TMB2356S

34. Motor Will Not Start/Run

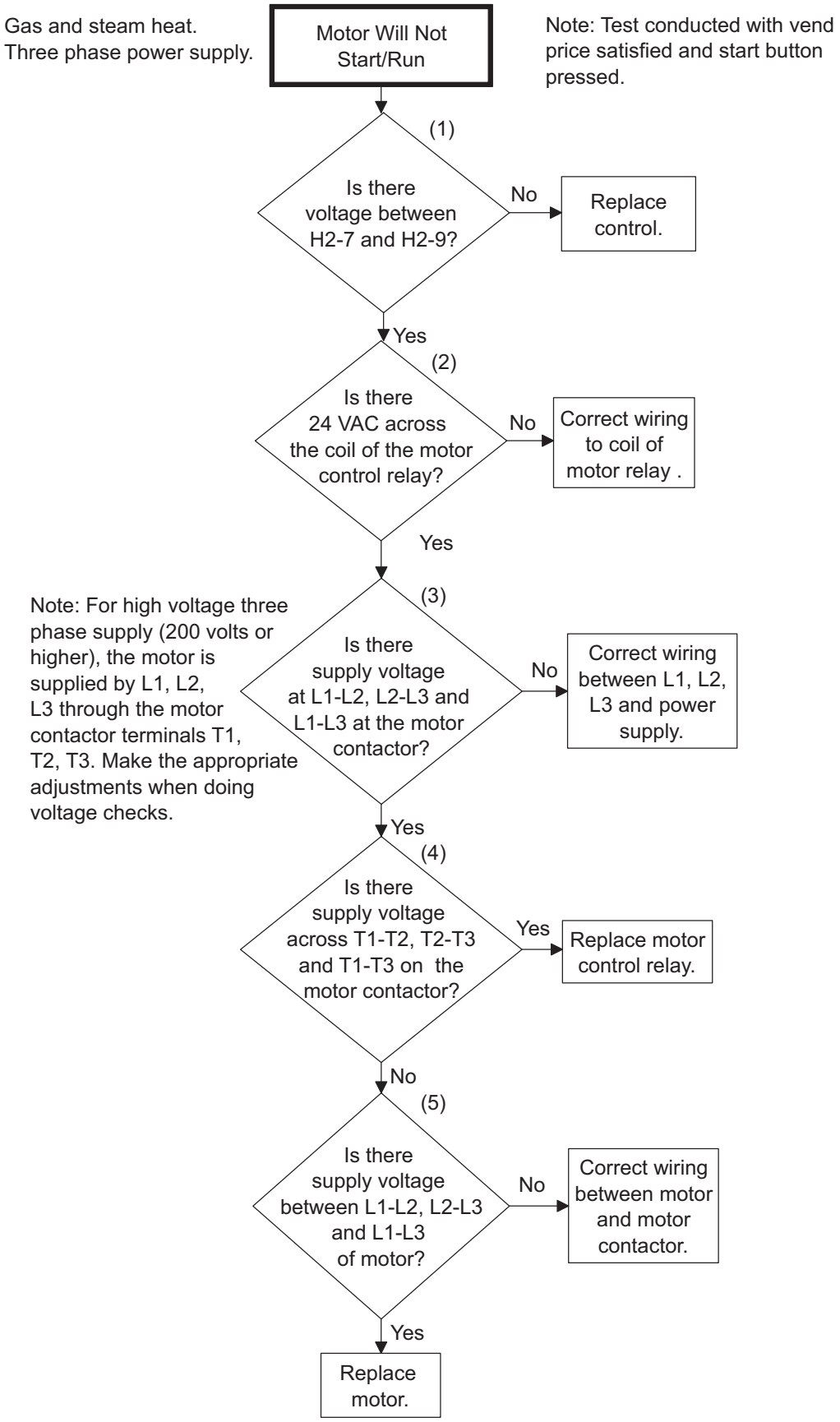

TMB2322S

Motor Will Not Start/Run

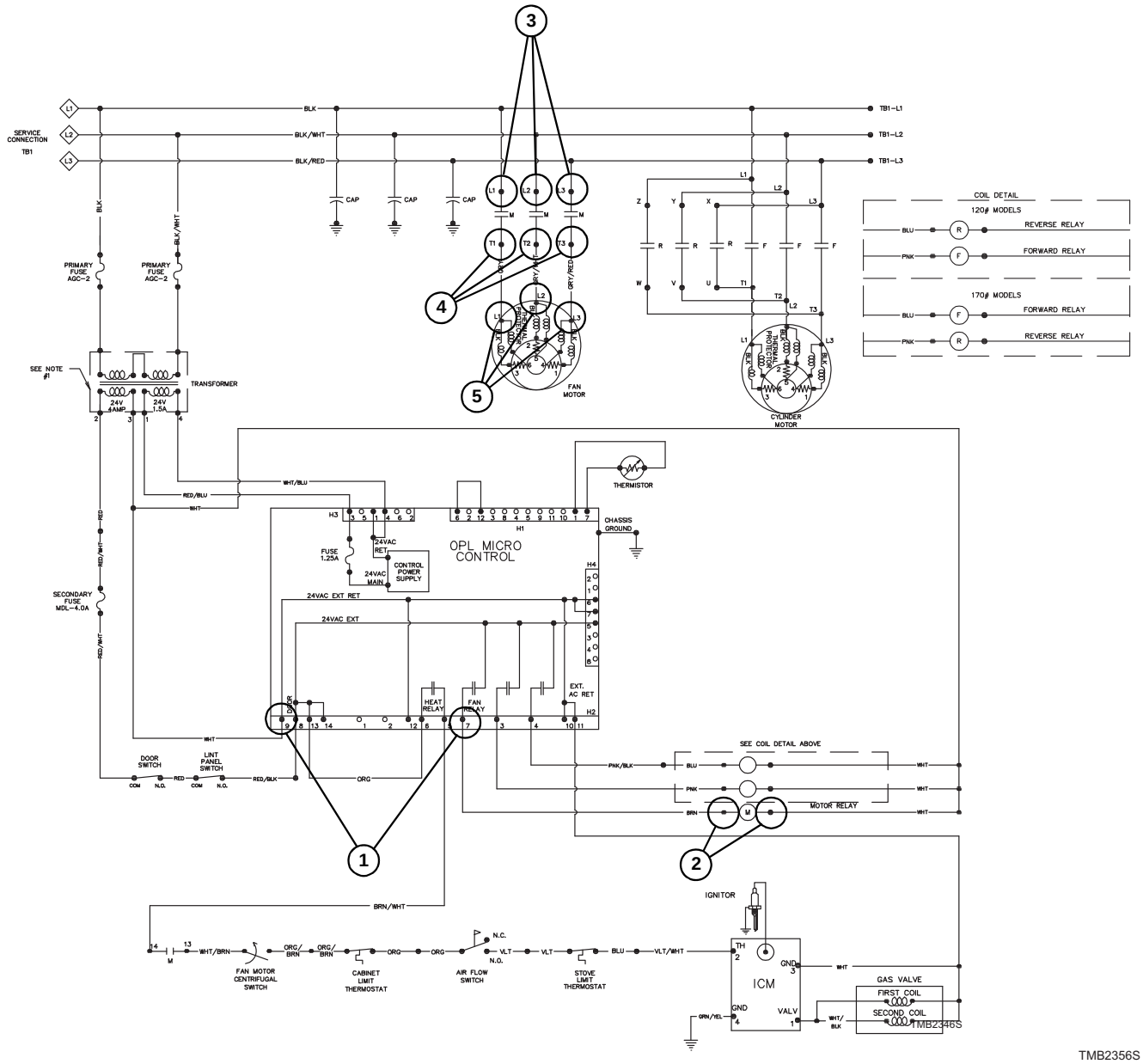

35. Unit Will Not Heat – Gas/Steam

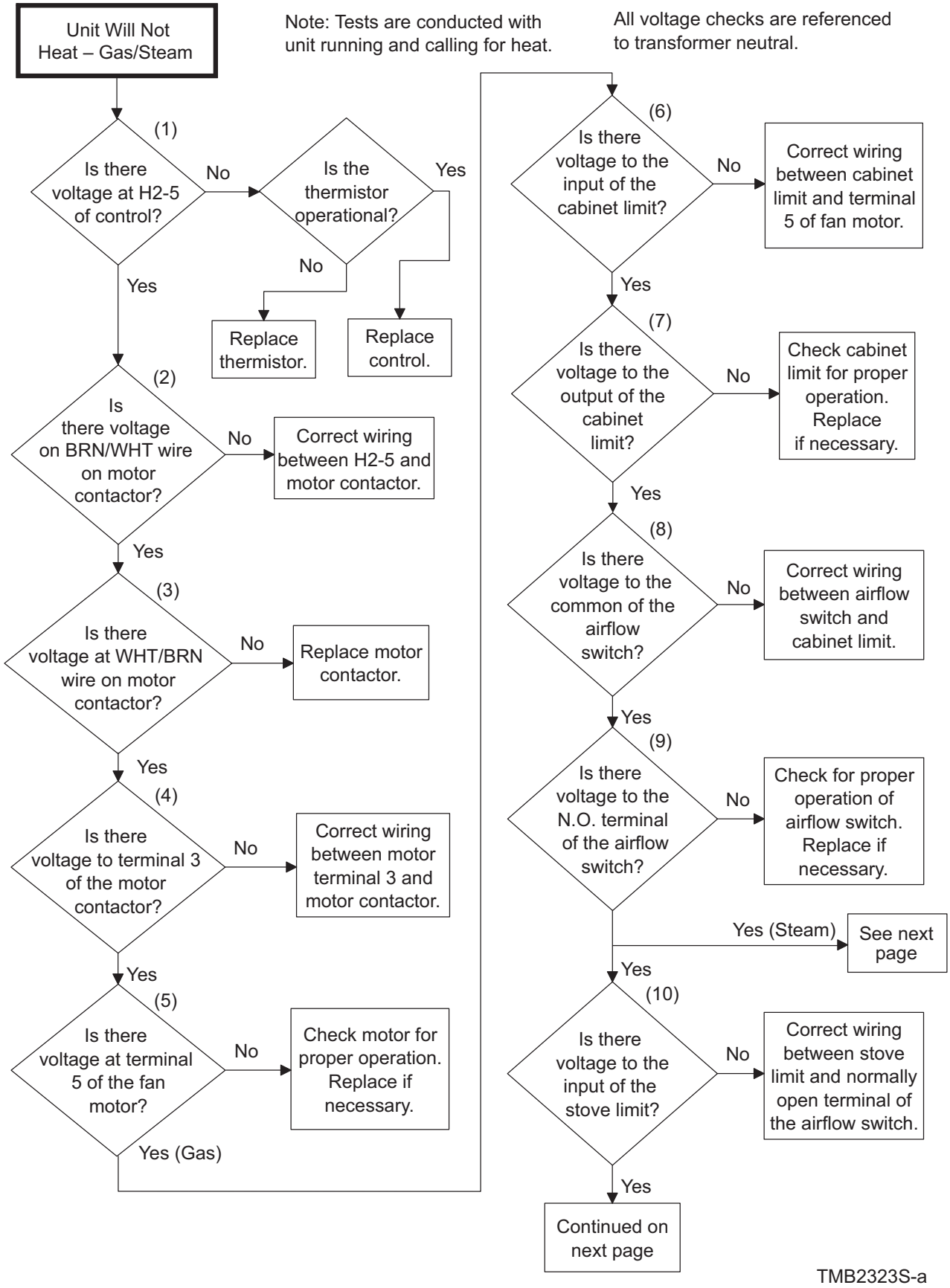

35. Unit Will Not Heat – Gas/Steam (continued)

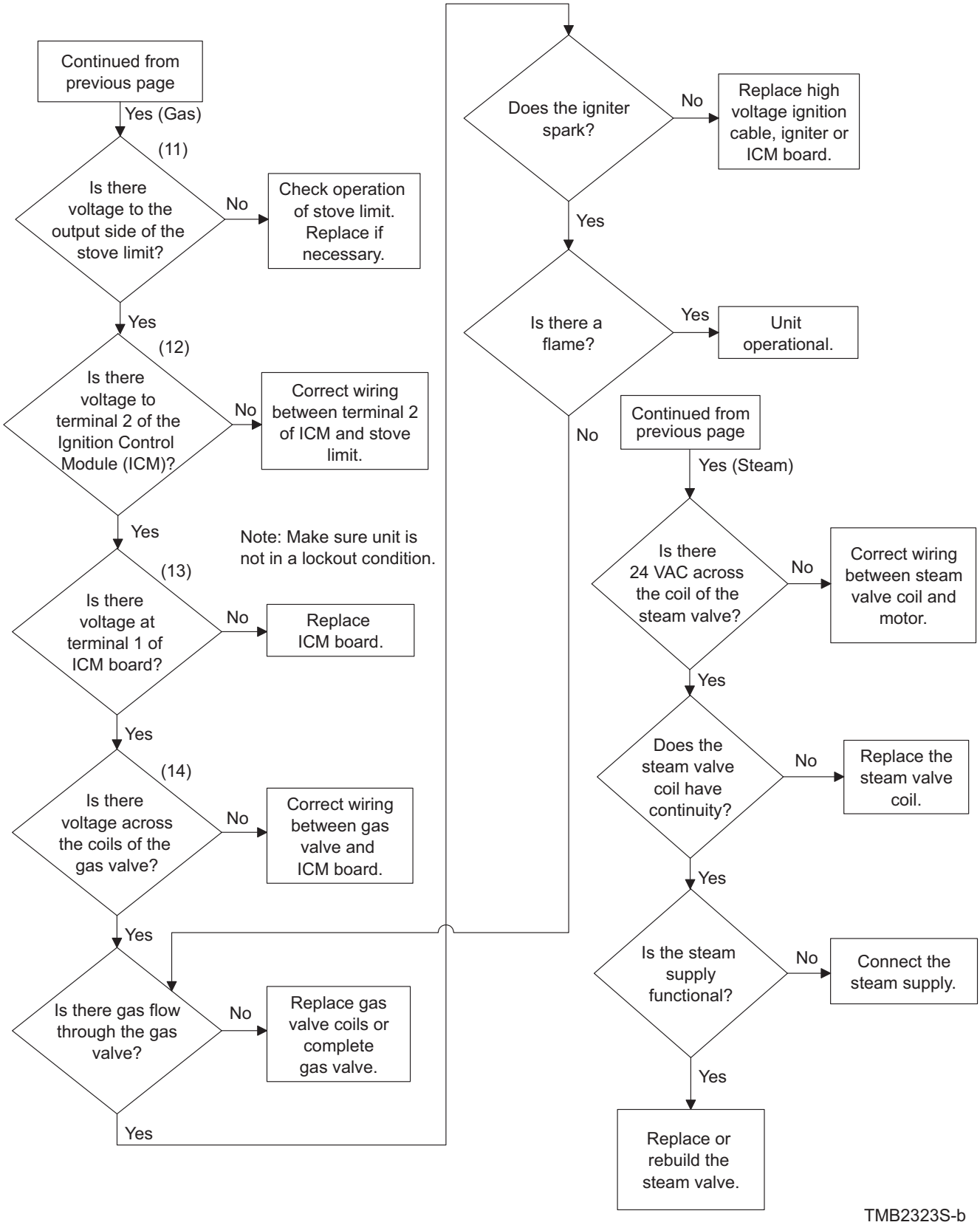

Please see following page for wiring diagram information.

Unit Will Not Heat – Gas/Steam

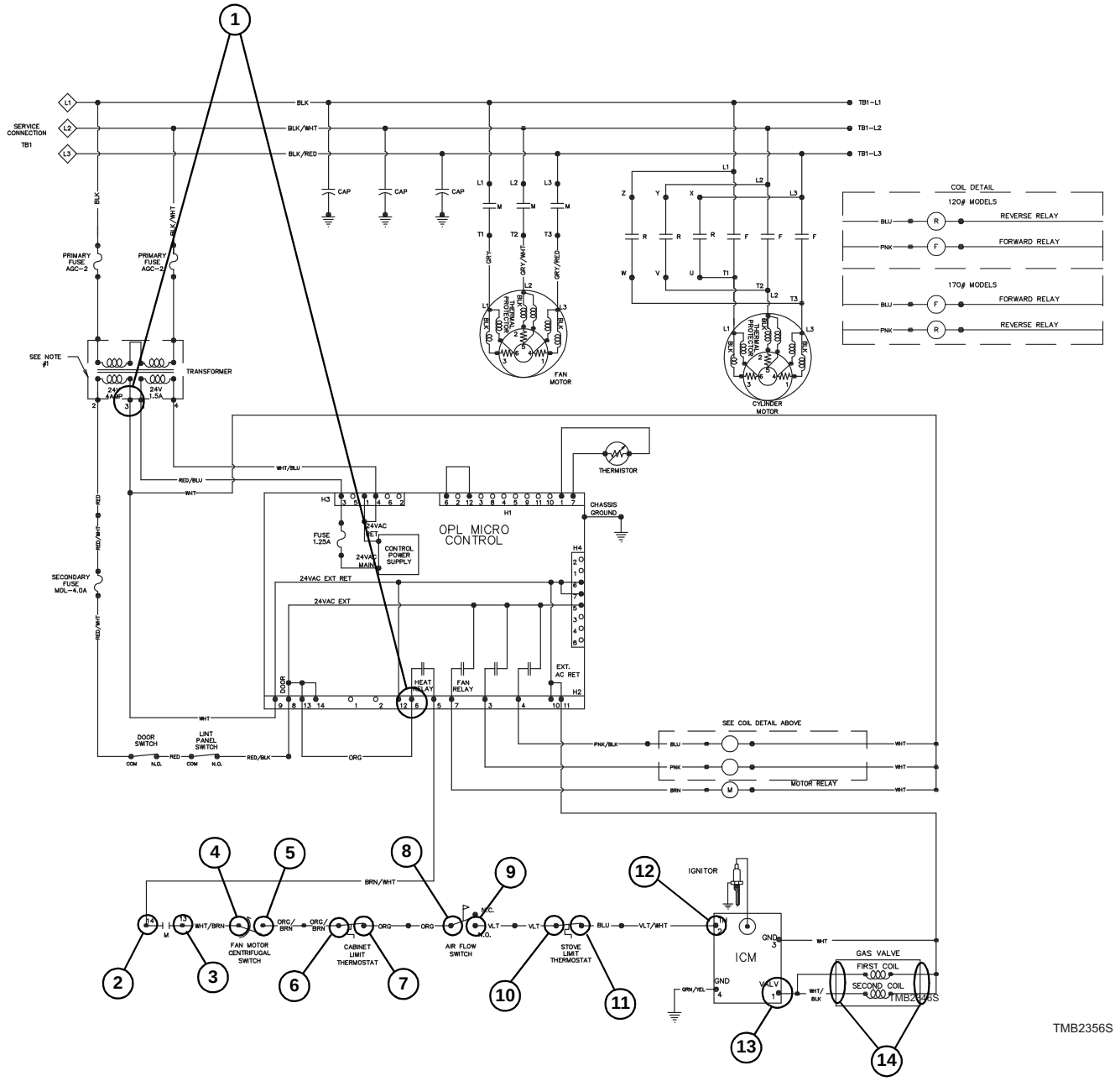

36. Error Codes

OP - Indicates physical “open” in the thermistor circuit. Possible causes are: 1) thermistor, 2) wiring between control and thermistor, 3) control.
SH - Indicates a “short” in the thermistor circuit. Possible causes are: 1) shorted thermistor, 2) a short in the wiring between control and thermistor, 3) control.

Display	Definition	Corrective Action
OP	Indicates an open circuit in the thermistor.	• Check thermistor. Replace if inoperative. • Check wiring between control and thermistor. Refer to wiring diagram for proper wiring. • Check control. Replace if inoperative.
SH	Indicates a short circuit in the thermistor.	• Check thermistor. Replace if inoperative. • Check wiring between control and thermistor. Refer to wiring diagram for proper wiring. • Check control. Replace if inoperative.