Commercial Frontload Washers

Refer to Page 3 for Model Numbers

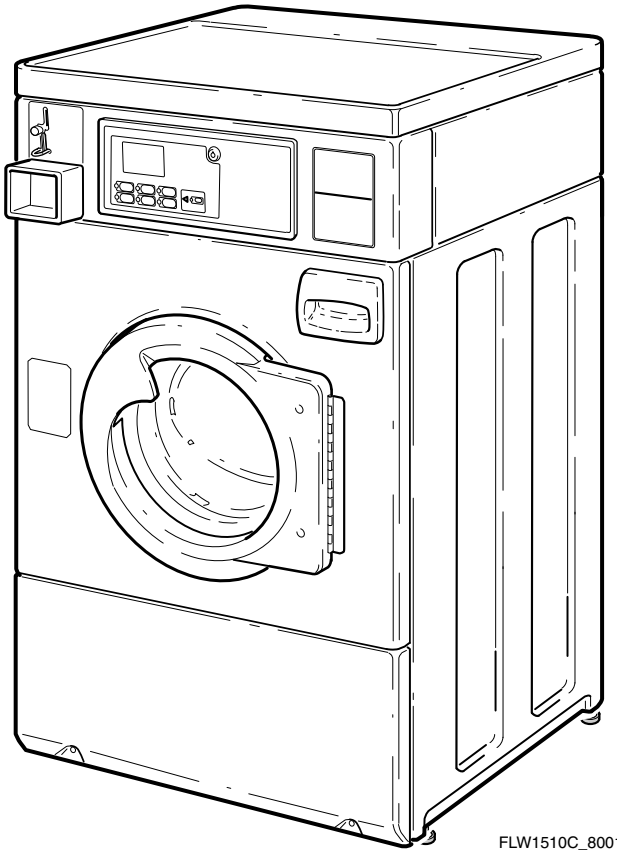

Parts

Alliance™ Laundry Systems

www.alliancelaundry.com

Part No. 800167R13
January 2020

Table of Contents

Title	Page
Parts Ordering Information	2
Serial Plate Location	2
Model Identification	3
Control Panel and Controls	4
Cabinet Top	6
Control Shield and Motor Control	8
Control Shield and Other Controls	10
Wrapper Assembly and Coin Drop	12
Electronic Coin Drop	14
Wrapper Assembly	16
Wrapper Assembly and Card Reader Kit	18
Wrapper Assembly and Card Reader	20
Front Panel, Older Style Door Assembly and Door Seal	22
Front Panel, Newer Style Door Assembly and Door Seal	24
Dispenser Assembly	26
Mixing Valve and Fill Hose	28
Outer Tub, Front and Clamp Ring	30
Inner Basket, Trunnion, Bearing Housing and Pulley	32
Motor and Belt	34
Hoses and Pump	36
Base, Panels and Rear Panel	38
Shipping Materials	40
Wire Ties, Harness Clips and Lead-In Cord	42
Special Tools	44
Labels (Drawing 1 of 2)	46
Labels (Drawing 2 of 2)	48
Wire Harnesses and Wires	50
Parts Index	53

© Copyright 2020, Alliance Laundry Systems LLC

All rights reserved. No part of the contents of this book may be reproduced or transmitted in any form or by any means without the expressed written consent of the publisher.

Parts Ordering Information

If literature or replacement parts are required, contact the source from whom the machine was purchased or contact Alliance Laundry Systems at (920) 748-3950 for the name and address of the nearest authorized parts distributor.

For technical assistance, call the number listed below:

(920) 748-3121 Ripon, Wisconsin

Serial Plate Location

When calling or writing about your product, be sure to mention model and serial numbers. Model and serial numbers are located on serial plate(s) as shown.

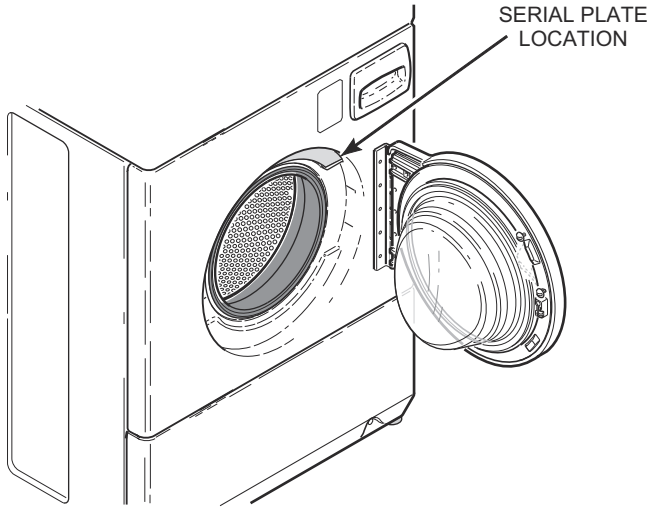

H129P_800167

© Copyright, Alliance Laundry Systems LLC – DO NOT COPY or TRANSMIT

Model Identification

Information in this manual is applicable to these washer models:

HWF561*E1102	HWFX61*H1102	SWF661*E	SWFB61*H	SWFH61*J
HWF561*H1102	HWFY61*H1102	SWF661*H	SWFB61*J	SWFJ61*J
HWF761*E1102	HWFZ61*H	SWF761*E	SWFC61*H	SWFT61*H
HWFB61*J1102	HWFZ61*H1102	SWF761*H	SWFC61*J	SWFX61*H
HWFF61*J1102	SWF561*E	SWFA61*H	SWFD61*H	SWFY61*H
HWFT61*H	SWF561*H	SWFA61*J	SWFF61*J	SWFZ61*H
HWFT61*H1102				

*** Add Letter To Designate Color. L - Almond Q - Bisque W - White**

© Copyright, Alliance Laundry Systems LLC – DO NOT COPY or TRANSMIT

Control Panel and Controls

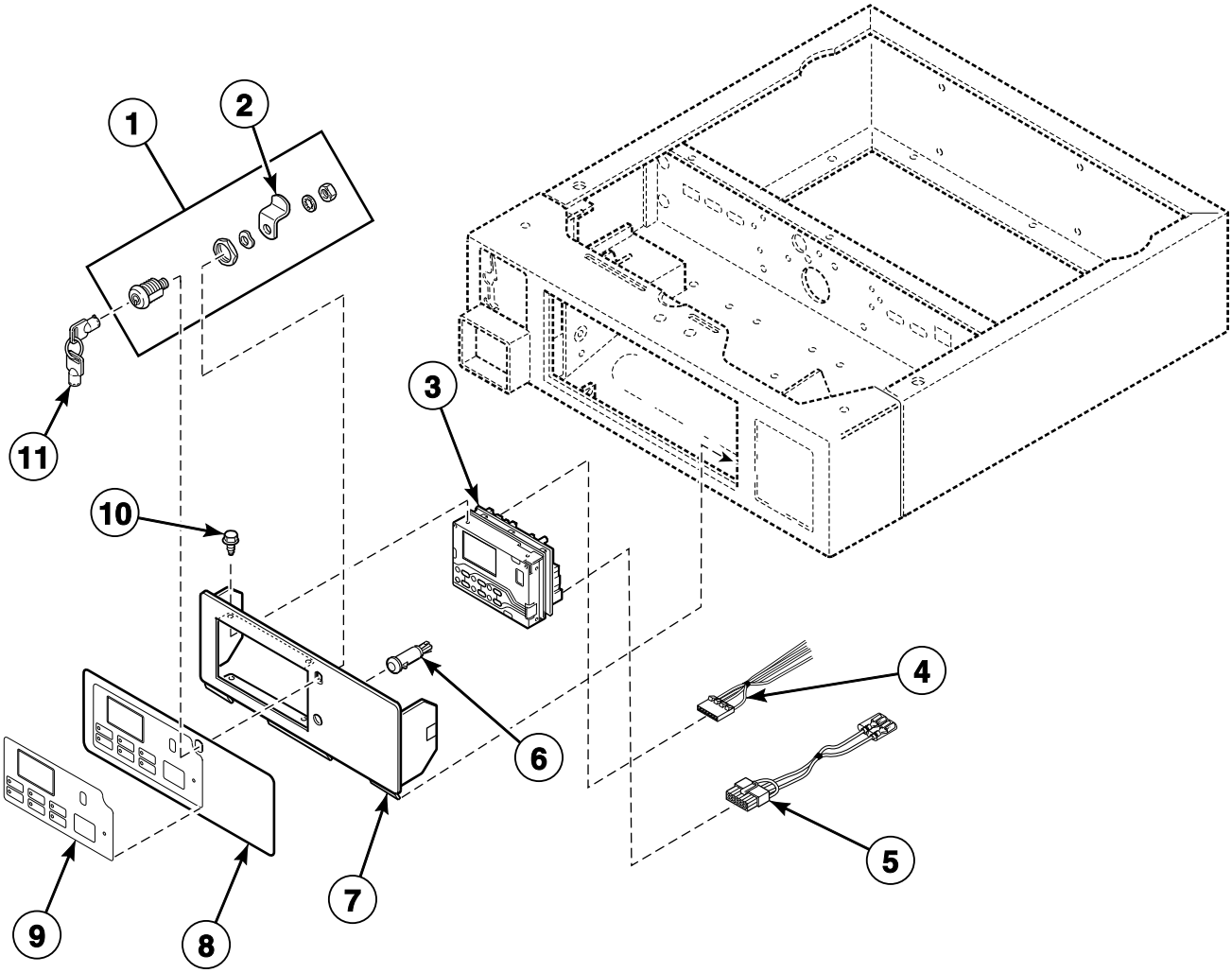

FLW1689P_800167

© Copyright, Alliance Laundry Systems LLC – DO NOT COPY or TRANSMIT

Control Panel and Controls

REF	PART NO.	DESCRIPTION	COMMENTS
1	27260P	Lock Kit	Includes item 2
2	27261	Lock Cam	
3	800303P	Control Assembly	Models HWF561*E1102, HWF561*H1102, HWF761*E1102, SWF561*E, SWF561*H, SWF661*E, SWF661*H, SWF761*E and SWF761*H
	800772P	Control Kit	Models HWFB61*J1102, HWFF61*J1102, SWFA61*H, SWFA61*J, SWFB61*H, SWFB61*J, SWFC61*H, SWFC61*J, SWFD61*H, SWFF61*J, SWFH61*J and SWFJ61*J
	803146P	Control Assembly	Models HWFT61*H, HWFT61*H1102, HWFX61*H1102, HWFY61*H1102, HWFZ61*H, HWFZ61*H1102, SWFT61*H, SWFX61*H, SWFY61*H and SWFZ61*H
4	D511478	Central Pay Harness	
5	800374	Diagnostic Wire Harness Assembly	Models HWFF61*J1102, HWFY61*H1102, SWFC61*J, SWFF61*J, SWFJ61*J and SWFY61*H
6	32464	Light	Models HWF561*E1102, HWF561*H1102, HWF761*E1102, SWF561*E, SWF561*H, SWF661*E, SWF661*H, SWF761*E, SWF761*H, SWFA61*H, SWFB61*H, SWFC61*H and SWFD61*H
7	685061W	Control Panel and Bracket Assembly	Models HWF561*E1102, HWF761*E1102, SWF561*E, SWF661*E and SWF761*E
	800035W	Control Panel and Bracket Assembly	White; All other models
	800035L	Control Panel and Bracket Assembly	Almond; All other models
	800035Q	Control Panel and Bracket Assembly	Bisque; All other models
8	685510	Overlay	Models SWF561*E, SWF661*E, SWF761*E, SWF561*H, SWF661*H and SWF761*H
	N/A	Overlay	Models HWF561*E1102, HWF761*E1102 and HWF561*H1102
	800033	Control Panel Overlay	Models SWFC61*J, SWFF61*J and SWFJ61*J
	800413	Control Panel Overlay	Models SWFA61*H, SWFA61*J, SWFB61*H, SWFB61*J, SWFC61*H, SWFD61*H and SWFH61*J
	800416	Control Panel Overlay	Model HWFB61*J1102
	N/A	Overlay	Model HWFF61*J1102
	801050	Front Overlay	Models SWFT61*H, SWFX61*H, SWFY61*H and SWFZ61*H
	801053	Front Overlay	Models HWFT61*H, HWFT61*H1102, HWFX61*H1102, HWFY61*H1102, HWFZ61*H and HWFZ61*H1102
9	803597	Overlay	French/English; Models HWFT61*H1102, HWFX61*H1102, HWFY61*H1102 and HWFZ61*H1102
10	D501524	Screw	
11	54612	Key	GR800

*** Add Letter To Designate Color. L - Almond Q - Bisque W - White**

N/A = Part no longer available

© Copyright, Alliance Laundry Systems LLC – DO NOT COPY or TRANSMIT

Cabinet Top

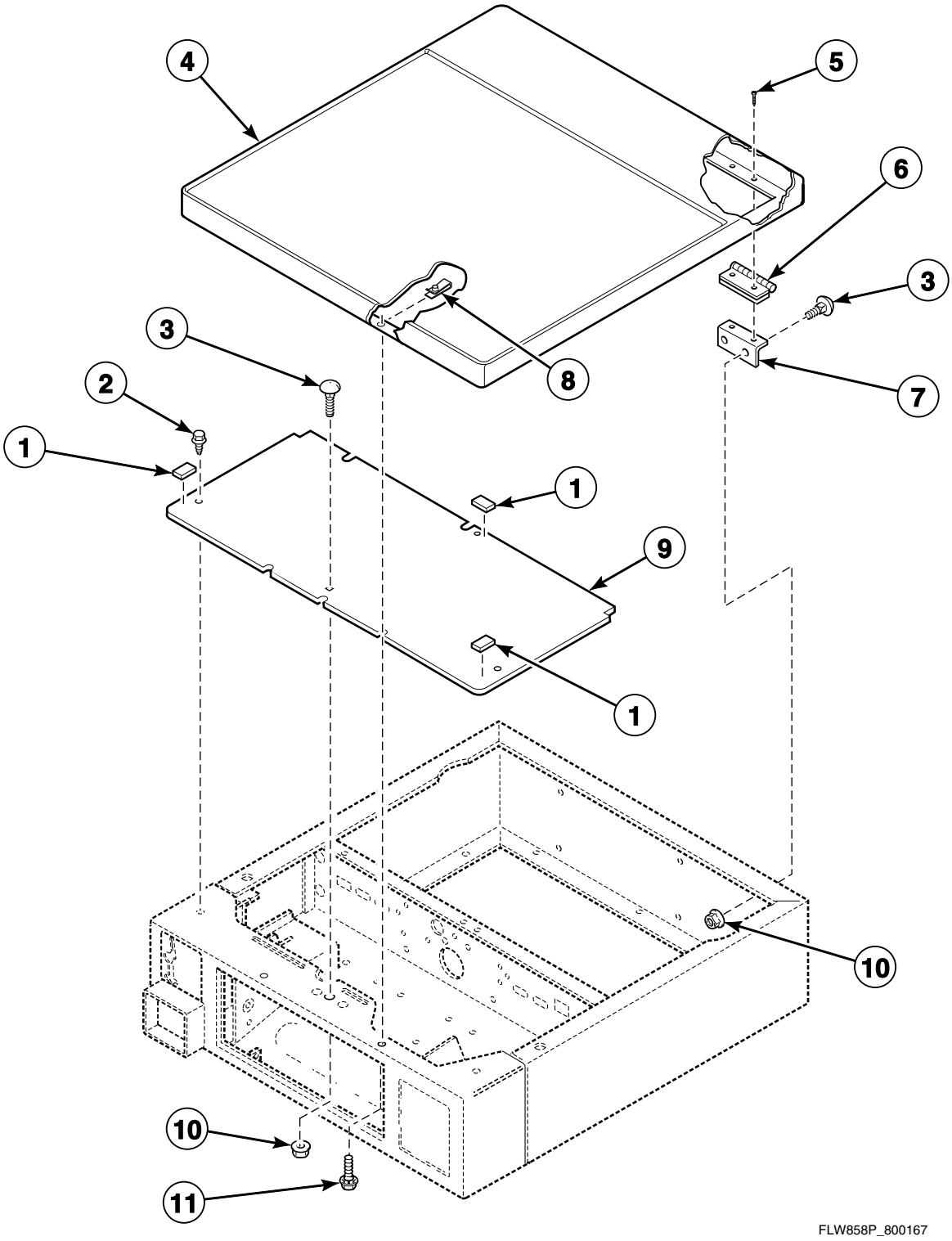

© Copyright, Alliance Laundry Systems LLC – DO NOT COPY or TRANSMIT

Cabinet Top

REF	PART NO.	DESCRIPTION	COMMENTS
1	56128	Bumper Pad	Use with item 8
2	D502431	Screw	Models SWF561*E, SWF661*E and SWF761*E
	36048	Screw	All other models
3	29651	Bolt	
4	802247WP	Top and Gusset Assembly	White; Includes (1) 802247* Top Panel, (10) 02788 Nut, (10) 34337 Screw, (2) 510146 Bracket and (2) each of items 6 and 7
	D510032LP	Top Kit	Almond; Includes (1) 802247* Top Panel, (10) 02788 Nut, (10) 34337 Screw, (2) 510146 Bracket and (2) each of items 6 and 7
	802247QP	Top and Gusset Assembly	Bisque; Includes (1) 802247* Top Panel, (10) 02788 Nut, (10) 34337 Screw, (2) 510146 Bracket and (2) each of items 6 and 7
5	685847	Pop Rivet	
6	D511036	Hinge	
7	D504228	Top Mounting Bracket	
8	36020	Nut	
9	N/A	Security Top Panel	All models except HWFF61*J1102, HWFY61*H1102, SWFC61*H, SWFC61*J, SWFD61*H, SWFF61*J, SWFJ61*J and SWFY61*H
10	29796	Nut	
11	23008	Screw	

*** Add Letter To Designate Color. L - Almond Q - Bisque W - White**

N/A = Part no longer available

© Copyright, Alliance Laundry Systems LLC – DO NOT COPY or TRANSMIT

Control Shield and Motor Control

Models HWF561*E1102, HWF761*E1102, SWF561*E, SWF661*E and SWF761*E

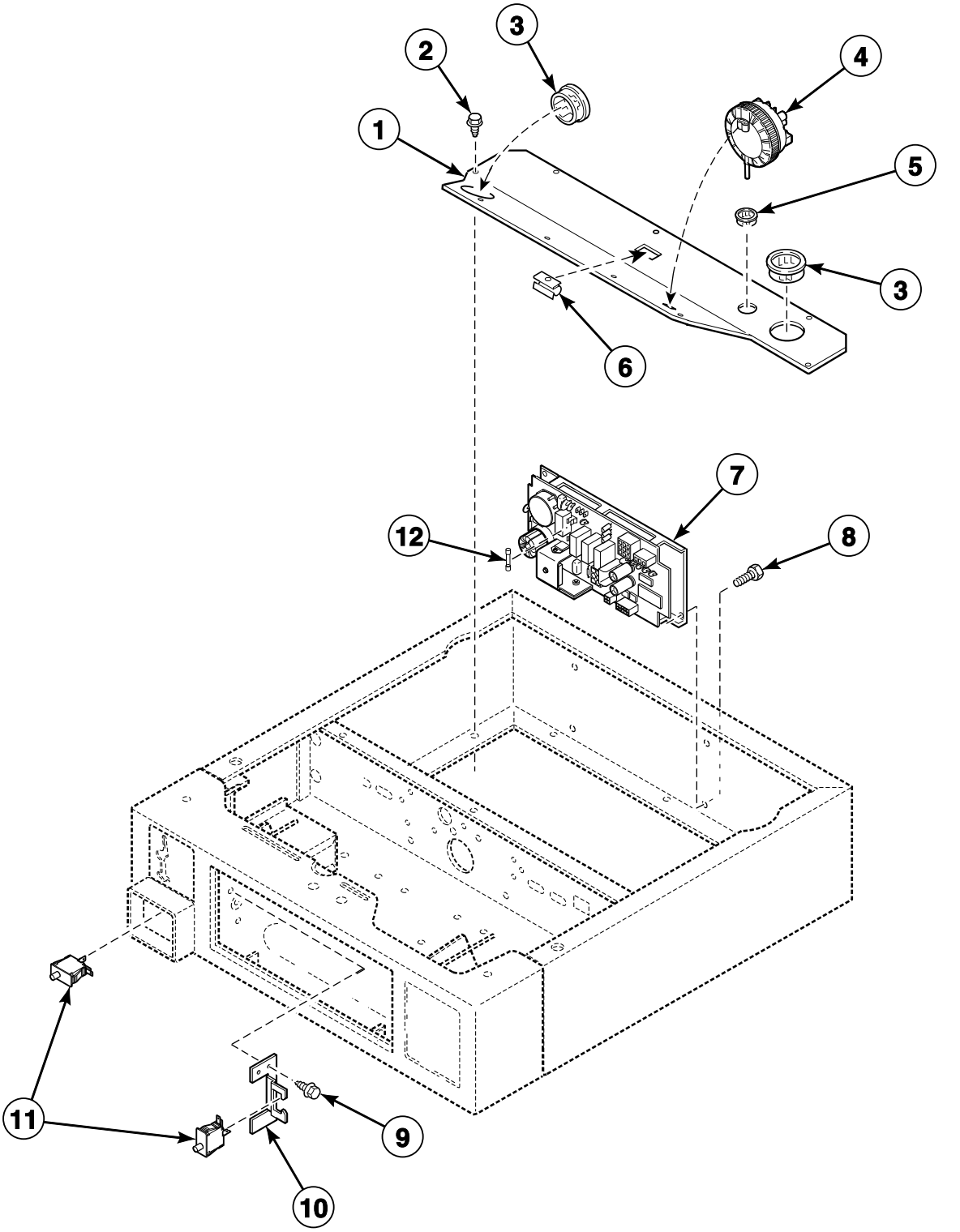

FLW971P_800167

© Copyright, Alliance Laundry Systems LLC – DO NOT COPY or TRANSMIT

Control Shield and Motor Control

REF	PART NO.	DESCRIPTION	COMMENTS
1	801371	Control Shield	
2	D503661	Screw	
3	D503235	Snap Bushing	Models through Serial Nos. beginning 0105
4	800468P	Pressure Switch	
5	M402542	Snap Bushing	
6	36985	Hose Clip	
7	687539P	Motor Control Assembly	
8	D501524	Screw	
9	D503688	Screw	
10	38087	Door Switch Bracket	
11	D512973	Switch	
12	F350138	Fuse	7 Amp; 1.25 x .25

*** Add Letter To Designate Color. L - Almond Q - Bisque W - White**

© Copyright, Alliance Laundry Systems LLC – DO NOT COPY or TRANSMIT

Control Shield and Other Controls

All Models Except HWF561*E1102, HWF761*E1102, SWF561*E, SWF661*E and SWF761*E

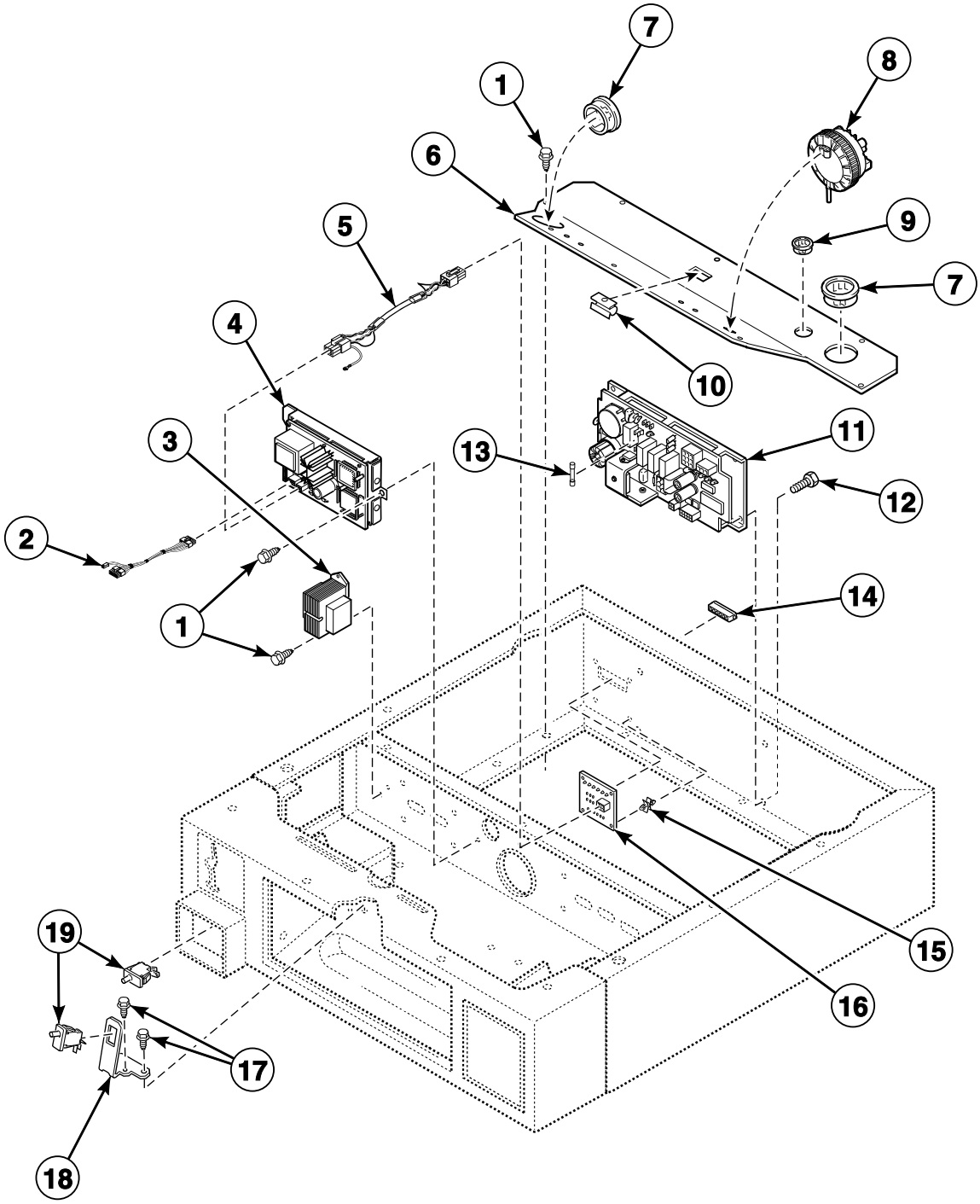

FLW972P_800167

© Copyright, Alliance Laundry Systems LLC – DO NOT COPY or TRANSMIT

Control Shield and Other Controls

REF	PART NO.	DESCRIPTION	COMMENTS
	210157P	Network Board	For tower PC; Models SWFH61*J and SWFJ61*J
1	D503661	Screw	
2	800217	Network Wire Harness Assembly	Models SWFH61*J and SWFJ61*J
3	210018P	Transformer	Models HWFB61*J1102, HWFF61*J1102, HWFT61*H, HWFT61*H1102, HWFZ61*H, HWFZ61*H1102, SWFA61*H, SWFB61*H, SWFB61*J, SWFC61*H, SWFD61*H, SWFF61*J, SWFH61*J, SWFJ61*J, SWFT61*H and SWFZ61*H
	803527P	Transformer	Models HWFX61*H1102, HWFY61*H1102, SWFA61*J, SWFC61*J, SWFX61*H and SWFY61*H
4	210016P	Network Board Assembly	Models SWFH61*J and SWFJ61*J
5	800216	Network Cable Wire Harness Assembly	Models SWFH61*J and SWFJ61*J
6	801371	Control Shield	
7	D503235	Snap Bushing	Models through Serial Nos. beginning 0105
8	800468P	Pressure Switch	
9	M402542	Snap Bushing	
10	36985	Hose Clip	
11	687539P	Motor Control Assembly	
12	D501524	Screw	
13	F350138	Fuse	7 Amp; 1.25 x .25
14	210099	Communication Connector	Models SWFH61*J and SWFJ61*J
15	210098	PC Board Standoff	Models SWFH61*J and SWFJ61*J
16	210095P	Communication Board	Models SWFH61*J and SWFJ61*J
17	D503688	Screw	
18	800379	Audit Switch Bracket	
19	D512973	Switch	

*** Add Letter To Designate Color. L - Almond Q - Bisque W - White**

© Copyright, Alliance Laundry Systems LLC – DO NOT COPY or TRANSMIT

Wrapper Assembly and Coin Drop

Models HWF561*E1102, HWF561*H1102, HWFB61*J1102, HWFT61*H, HWFT61*H1102, HWFX61*H1102, HWFZ61*H, HWFZ61*H1102, SWF561*E, SWF561*H, SWFA61*H, SWFA61*J, SWFB61*H, SWFB61*J, SWFH61*J, SWFT61*H, SWFX61*H and SWFZ61*H

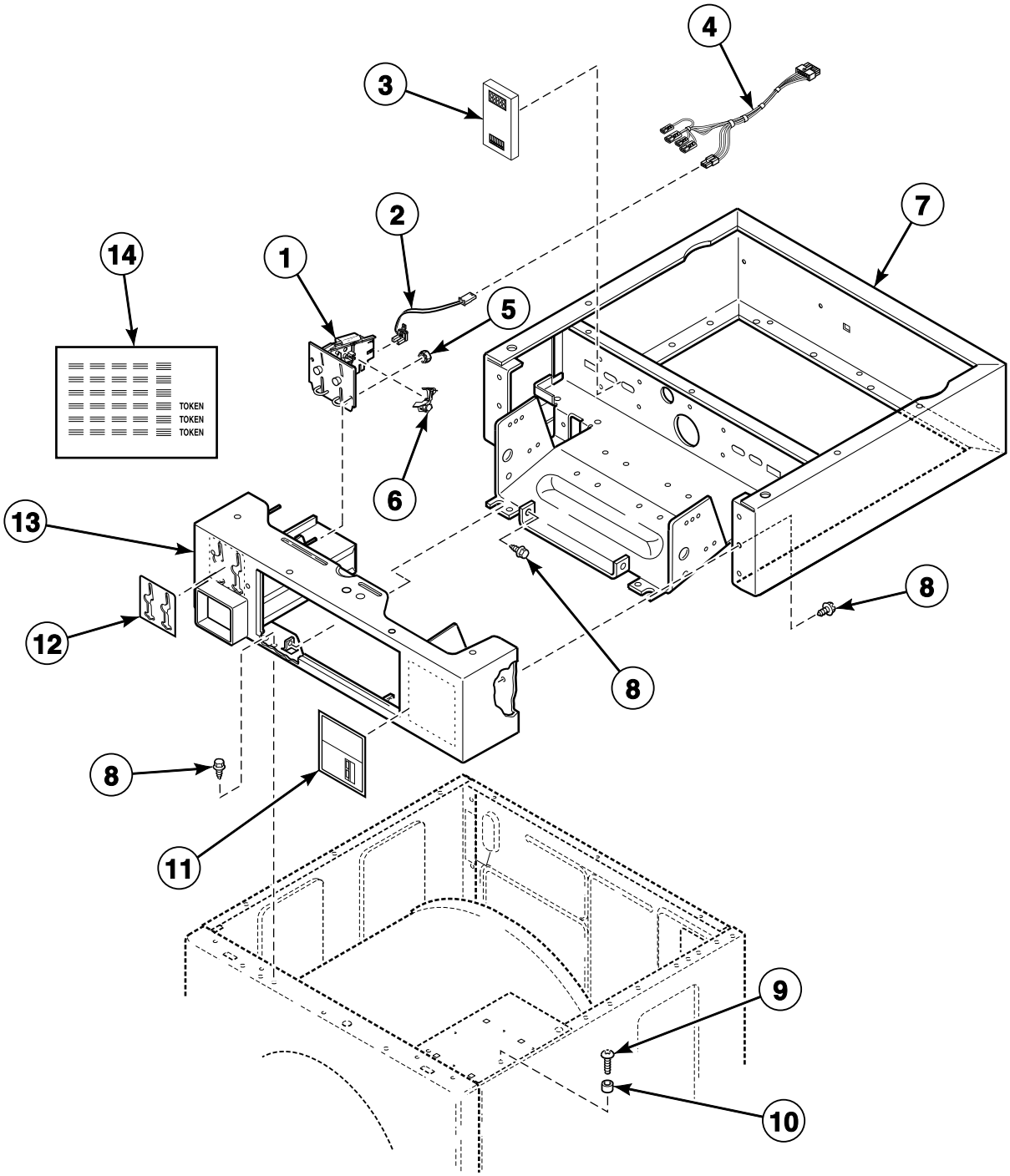

FLW973P_800167

© Copyright, Alliance Laundry Systems LLC – DO NOT COPY or TRANSMIT

Wrapper Assembly and Coin Drop

REF	PART NO.	DESCRIPTION	COMMENTS
1	70441602	Coin Drop Assembly	Dual drop; Models HWF561*E1102, HWF561*H1102, HWFB61*J1102, HWFT61*H1102 and HWFZ61*H1102
	70441601P	Coin Drop	Single drop; All other models
2	200674P	Opto Coupler	
3	38571	Multiplier Assembly	Models HWF561*E1102, HWF561*H1102, HWFB61*J1102, HWFT61*H1102 and HWFZ61*H1102
4	802904P	Harness Assembly	Models HWFT61*H, HWFZ61*H, SWFB61*H, SWFB61*J, SWFH61*J, SWFT61*H and SWFZ61*H
	802905	Harness Assembly	Models HWFB61*J1102, HWFT61*H1102, HWFX61*H1102, HWFZ61*H1102, SWFA61*H, SWFA61*J and SWFX61*H; Models HWFT61*H, HWFZ61*H, SWFB61*H, SWFB61*J, SWFH61*J, SWFT61*H and SWFZ61*H use this harness if converting to a dual coin drop
5	29786	Nut	
6	201595P	Wire Guard	Anti-stringing security device; Add to coin drops manufactured starting January 2005
7	D505753WP	Wrapper and Channel Assembly	White
	N/A	Wrapper and Channel Assembly	Almond
	D505753QP	Wrapper and Channel Assembly	Bisque
8	D503688	Screw	
9	39733	Screw	
10	56079	Panel Locator	
11	685942	Instruction Label	
12	39073	Dual Overlay	Dual drop; Models HWF561*E1102, HWF561*H1102, HWFB61*J1102, HWFT61*H1102, HWFX61*H1102 and HWFZ61*H1102
	38717	Single Overlay	Single drop; All other models
13	D511633WP	Security Cabinet Front Assembly	White
	D511633LP	Security Cabinet Front Assembly	Almond
	D511633QP	Security Cabinet Front Assembly	Bisque
14	38725	Coin Identification Paper	

*** Add Letter To Designate Color. L - Almond Q - Bisque W - White**
N/A = Part no longer available

© Copyright, Alliance Laundry Systems LLC – DO NOT COPY or TRANSMIT

Electronic Coin Drop

Models HWFB61*J1102, HWFT61*H, HWFT61*H1102, HWFX61*H1102, HWFZ61*H, HWFZ61*H1102, SWFA61*H, SWFA61*J, SWFB61*H, SWFB61*J, SWFT61*H, SWFX61*H and SWFZ61*H

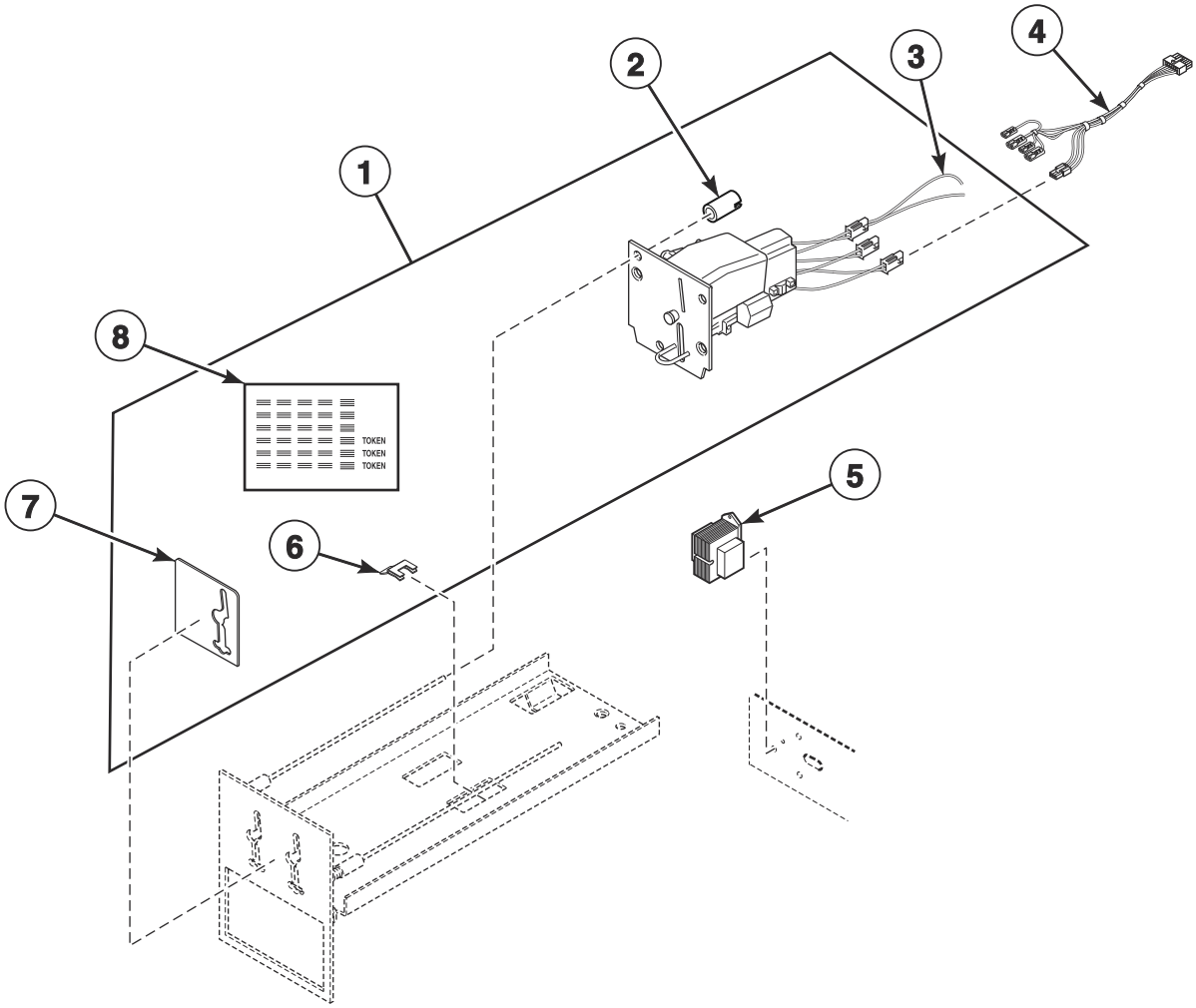

FLW1005P_800167

© Copyright, Alliance Laundry Systems LLC – DO NOT COPY or TRANSMIT

Electronic Coin Drop

REF	PART NO.	DESCRIPTION	COMMENTS
1	CK115	Electronic Coin Drop Kit	Includes items 2, 3 and 5-8
2	201216	Nut	
3	201104	Coin Drop Wire Harness	
4	802905	Harness Assembly	Electronic coin drop requires this harness. If unit is not factory-equipped with this harness, it must be ordered separately.
5	201375P	Transformer	Electronic coin drop requires this transformer. If unit is not factory-equipped with this transformer, it must be ordered separately.
6	201572	Clip	
7	201091	Overlay	
8	38725	Coin Identification Paper	

*** Add Letter To Designate Color. L - Almond Q - Bisque W - White**

© Copyright, Alliance Laundry Systems LLC – DO NOT COPY or TRANSMIT

Wrapper Assembly

Models SWFC61*H and SWFC61*J

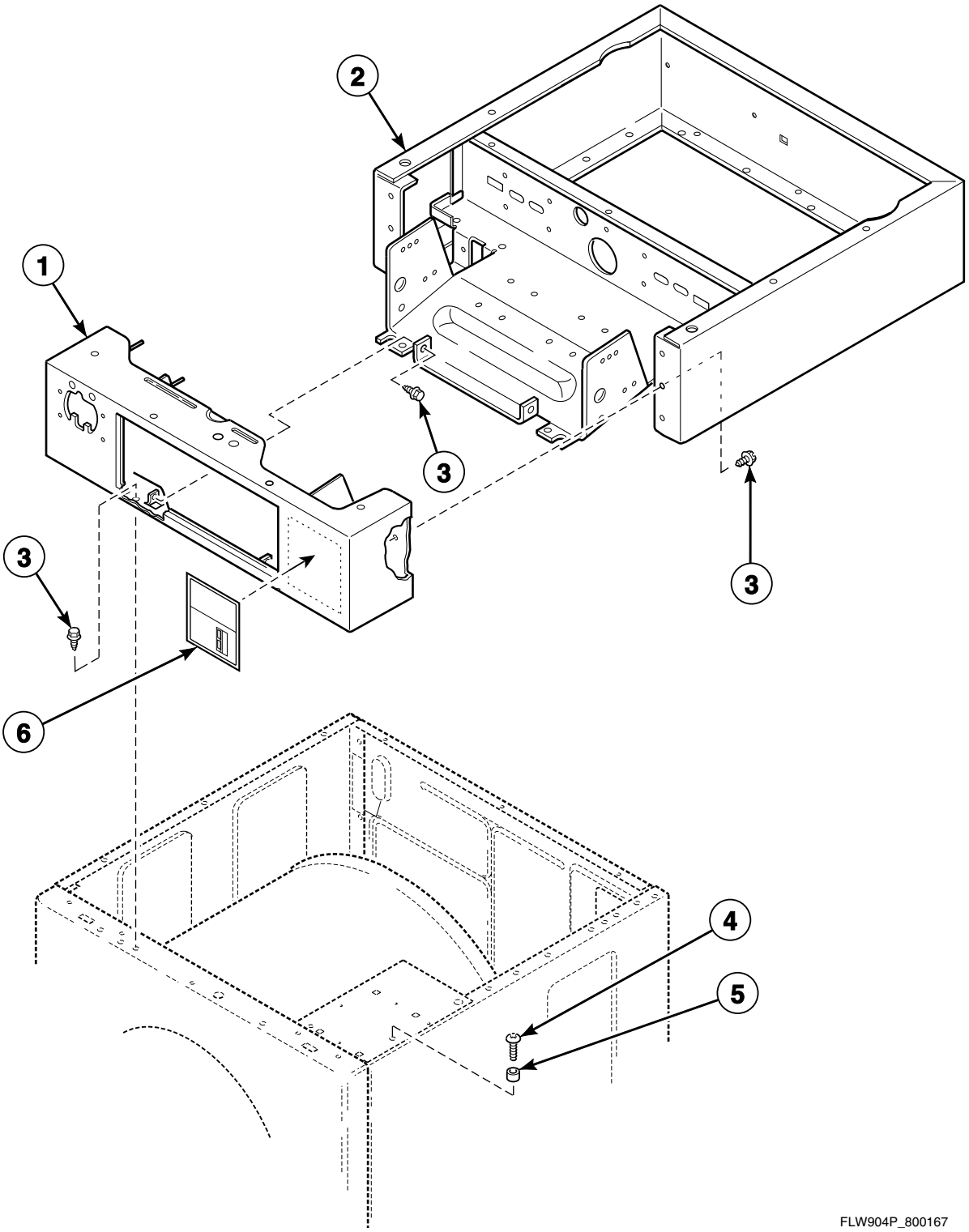

© Copyright, Alliance Laundry Systems LLC – DO NOT COPY or TRANSMIT

Wrapper Assembly

REF	PART NO.	DESCRIPTION	COMMENTS
1	D505699WP	Security Cabinet Front Assembly	White
	N/A	Security Cabinet Front Assembly	Almond
2	D505753WP	Wrapper and Channel Assembly	White
	N/A	Wrapper and Channel Assembly	Almond
	D505753QP	Wrapper and Channel Assembly	Bisque
3	D503688	Screw	
4	39733	Screw	
5	56079	Panel Locator	
6	685942	Instruction Label	

*** Add Letter To Designate Color. L - Almond Q - Bisque W - White**
N/A = Part no longer available

© Copyright, Alliance Laundry Systems LLC – DO NOT COPY or TRANSMIT

Wrapper Assembly and Card Reader Kit

Models HWF761*E1102, SWF661*E, SWF661*H, SWF761*E, SWF761*H and SWFD61*H

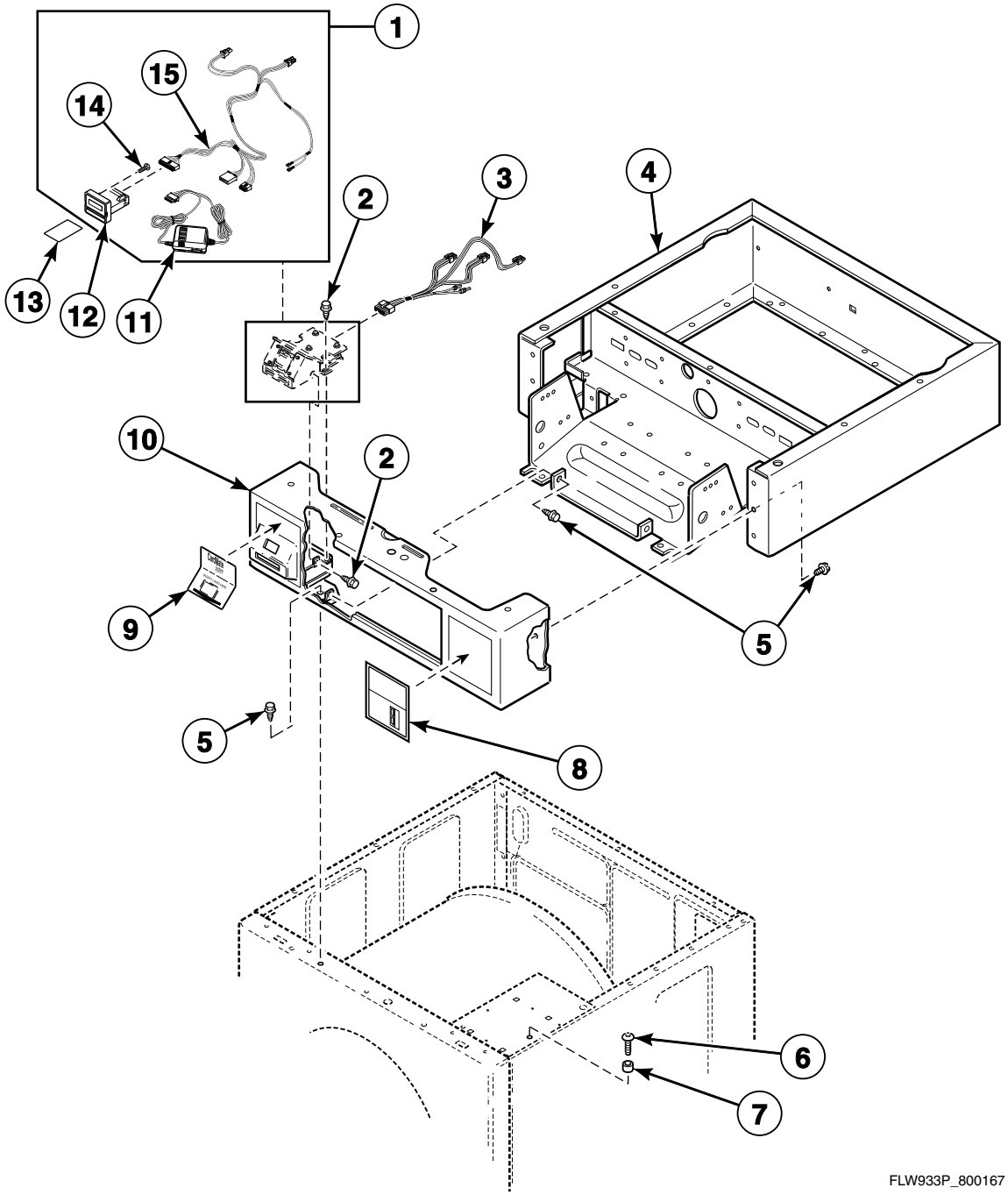

© Copyright, Alliance Laundry Systems LLC – DO NOT COPY or TRANSMIT

Wrapper Assembly and Card Reader Kit

REF	PART NO.	DESCRIPTION	COMMENTS
1	876P3	Card Reader Kit	Models HWF761*E1102, SWF661*E, SWF661*H, SWF761*E and SWF761*H
	885P3	Card Reader Kit	Model SWFD61*H
2	D501524	Screw	
3	686581	Card Reader Wire Harness Assembly	Use with 39685 Card Reader; Models HWF761*E1102, SWF761*E and SWF761*H
	N/A	Card Reader Harness Assembly	Use with 39685 Card Reader; Model SWFD61*H
4	D505753WP	Wrapper and Channel Assembly	White
	N/A	Wrapper and Channel Assembly	Almond
	D505753QP	Wrapper and Channel Assembly	Bisque
5	D503688	Screw	
6	39733	Screw	
7	56079	Panel Locator	
8	685942	Instruction Label	
9	N/A	Card Reader Overlay	Use with 39685 Card Reader; Model HWF761*E1102
	38192	Card Reader Instruction Overlay	Use with 39685 Card Reader; All other models
10	D505542W	Security Cabinet Front Assembly	Use with 39685 Card Reader
	D505699WP	Security Cabinet Front Assembly	White; Use with card reader kits
	N/A	Security Cabinet Front Assembly	Almond; Use with card reader kits
11	D512496	Power Supply	Models HWF761*E1102, SWF661*E, SWF661*H, SWF761*E and SWF761*H
	D512498	Power Supply	Model SWFD61*H
12	D512473	Card Reader	
13	D512499P	Programming Card	
14	D512505	Bolt	
15	D512501	Harness	Models HWF761*E1102, SWF661*E, SWF661*H, SWF761*E and SWF761*H
	D512503	Harness	Model SWFD61*H

*** Add Letter To Designate Color. L - Almond Q - Bisque W - White**

N/A = Part no longer available

© Copyright, Alliance Laundry Systems LLC – DO NOT COPY or TRANSMIT

Wrapper Assembly and Card Reader

Models HWFF61*J1102, HWFY61*H1102, SWFF61*J, SWFJ61*J and SWFY61*H

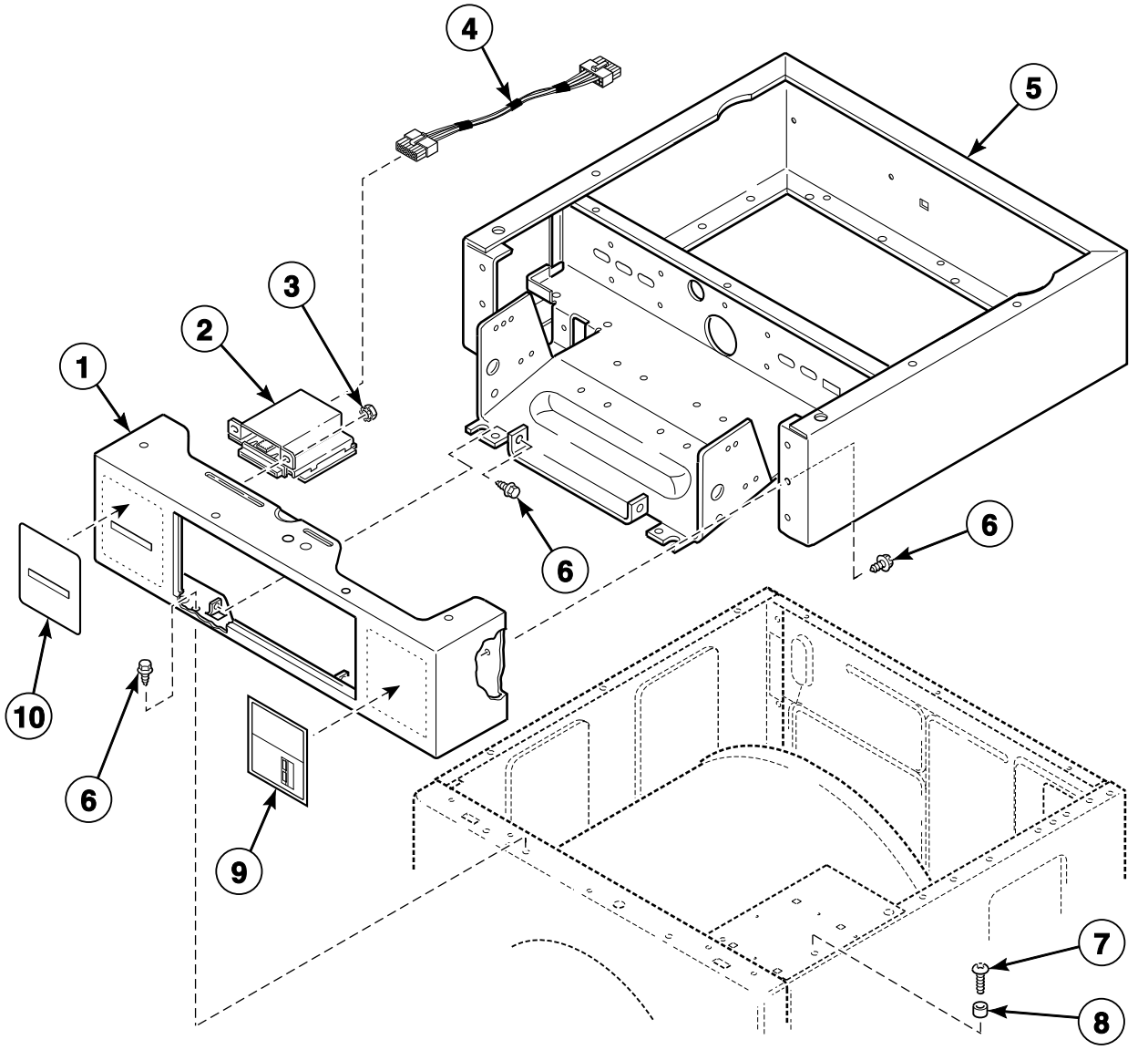

FLW898P_800167

© Copyright, Alliance Laundry Systems LLC – DO NOT COPY or TRANSMIT

Wrapper Assembly and Card Reader

REF	PART NO.	DESCRIPTION	COMMENTS
1	D511209WP	Security Cabinet Front Assembly	White
	D511209L	Security Cabinet Front Assembly	Almond
	D511209Q	Security Cabinet Front Assembly	Bisque
2	D510068P	Card Reader and Bracket Assembly	Models HWFF61*J1102, SWFF61*J and SWFJ61*J
3	70054	Nut	
4	800125P	Card Reader Wire Harness Assembly	Models HWFF61*J1102 and SWFF61*J
5	D505753WP	Wrapper and Channel Assembly	White
	N/A	Wrapper and Channel Assembly	Almond
	D505753QP	Wrapper and Channel Assembly	Bisque
6	D503688	Screw	
7	39733	Screw	
8	56079	Panel Locator	
9	685942	Instruction Label	
10	D511544	Card Insert Overlay	Model SWFY61*H
	D511548	Card Insert Overlay	Model HWFY61*H1102
	800230	Card Reader Overlay	All other models

*** Add Letter To Designate Color. L - Almond Q - Bisque W - White**
N/A = Part no longer available

© Copyright, Alliance Laundry Systems LLC – DO NOT COPY or TRANSMIT

Front Panel, Older Style Door Assembly and Door Seal

Models HWF561*E1102, HWF761*E1102, SWF561*E, SWF661*E and SWF761*E

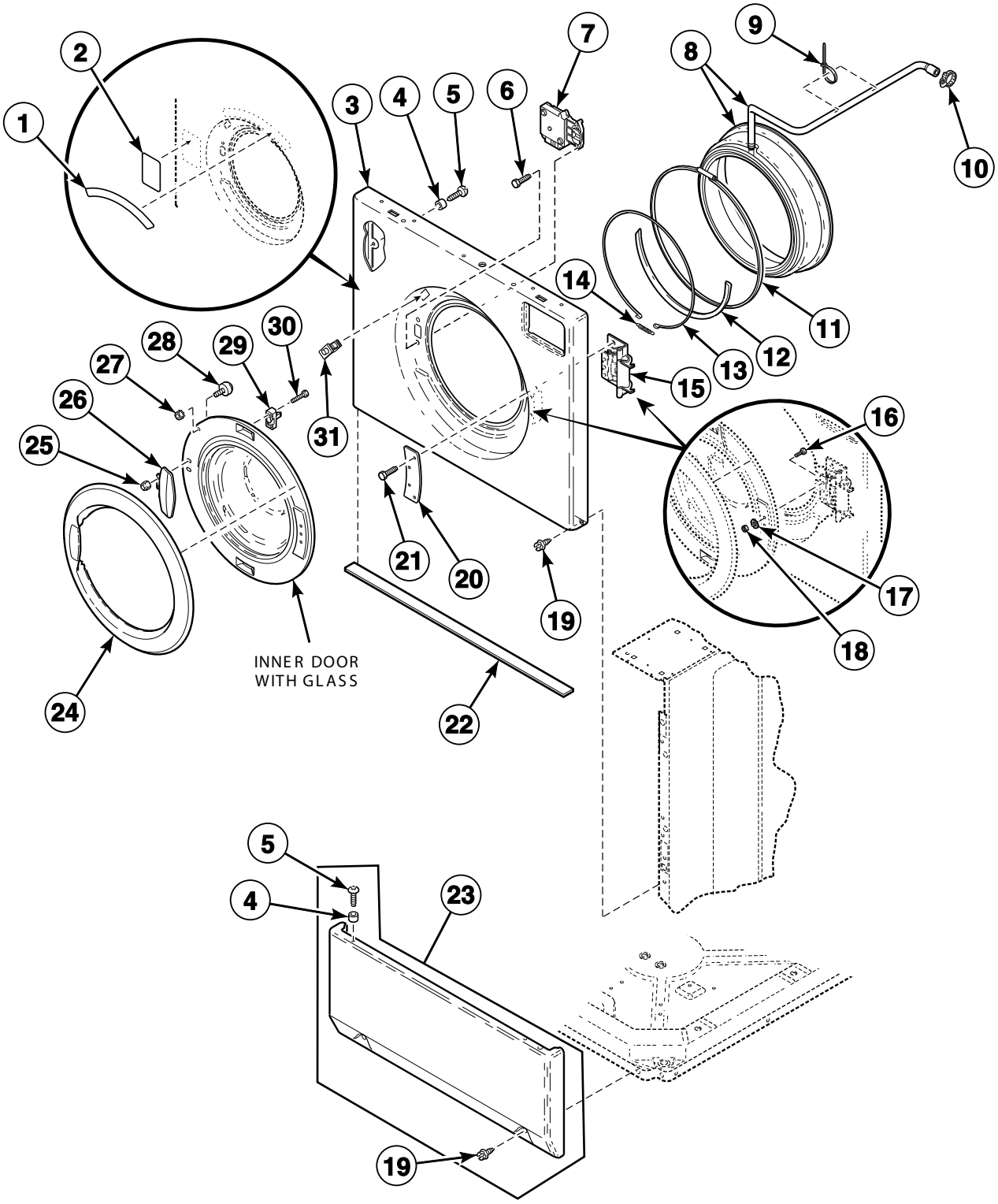

© Copyright, Alliance Laundry Systems LLC – DO NOT COPY or TRANSMIT

Front Panel, Older Style Door Assembly and Door Seal

REF	PART NO.	DESCRIPTION	COMMENTS
1	N/A	Low Sudsing Label	
2	685947	Door Locked Label	
3	800435WP	Front Panel Assembly	White; Includes items 4, 5, 7, 802412 Hinge Plate, 800336* Front Panel and 800436* Door Assembly
	800435LP	Front Panel Assembly	Almond; Includes items 4, 5, 7, 802412 Hinge Plate, 800336* Front Panel and 800436* Door Assembly
	800435QP	Front Panel Assembly	Bisque; Includes items 4, 5, 7, 802412 Hinge Plate, 800336* Front Panel and 800436* Door Assembly
4	56079	Panel Locator	
5	39733	Screw	
6	800548	Screw	
7	685429	Door Latch/Switch Assembly	
8	800232P	Door Seal and Hose Assembly Kit	Black
	801784P	Door Seal and Hose Assembly Kit	Gray
9	55881	Harness Strap	
10	36801	Hose Clamp	
11	685743P	Door Seal Clamp	
12	N/A	Foam Tape	Front panel door opening
13	800438	Wire Clamp Ring	
14	800346	Extension Spring	
15	685460	Door Hinge Assembly	
16	02916	Screw	
17	M400017	Washer	
18	52566	Nut	
19	D503661	Screw	
20	685470	Hinge Plate	
21	685862	Screw	
22	N/A	Foam Tape	1 inch by 26 inches
23	D514250WP	Access Panel Assembly	White
	D510069LP	Access Panel	Almond
	D514250Q	Access Panel Assembly	Bisque
24	N/A	Door Bezel	Replace using 800435*P Front Panel Assembly
25	685846	Nut	
26	685438	Door Handle	
27	51236	Nut	
28	N/A	Bumper	
29	685430	Locking Catch	
30	801993	Screw	
31	800211	Door Switch	

*** Add Letter To Designate Color. L - Almond Q - Bisque W - White**
N/A = Part no longer available

© Copyright, Alliance Laundry Systems LLC – DO NOT COPY or TRANSMIT

Front Panel, Newer Style Door Assembly and Door Seal

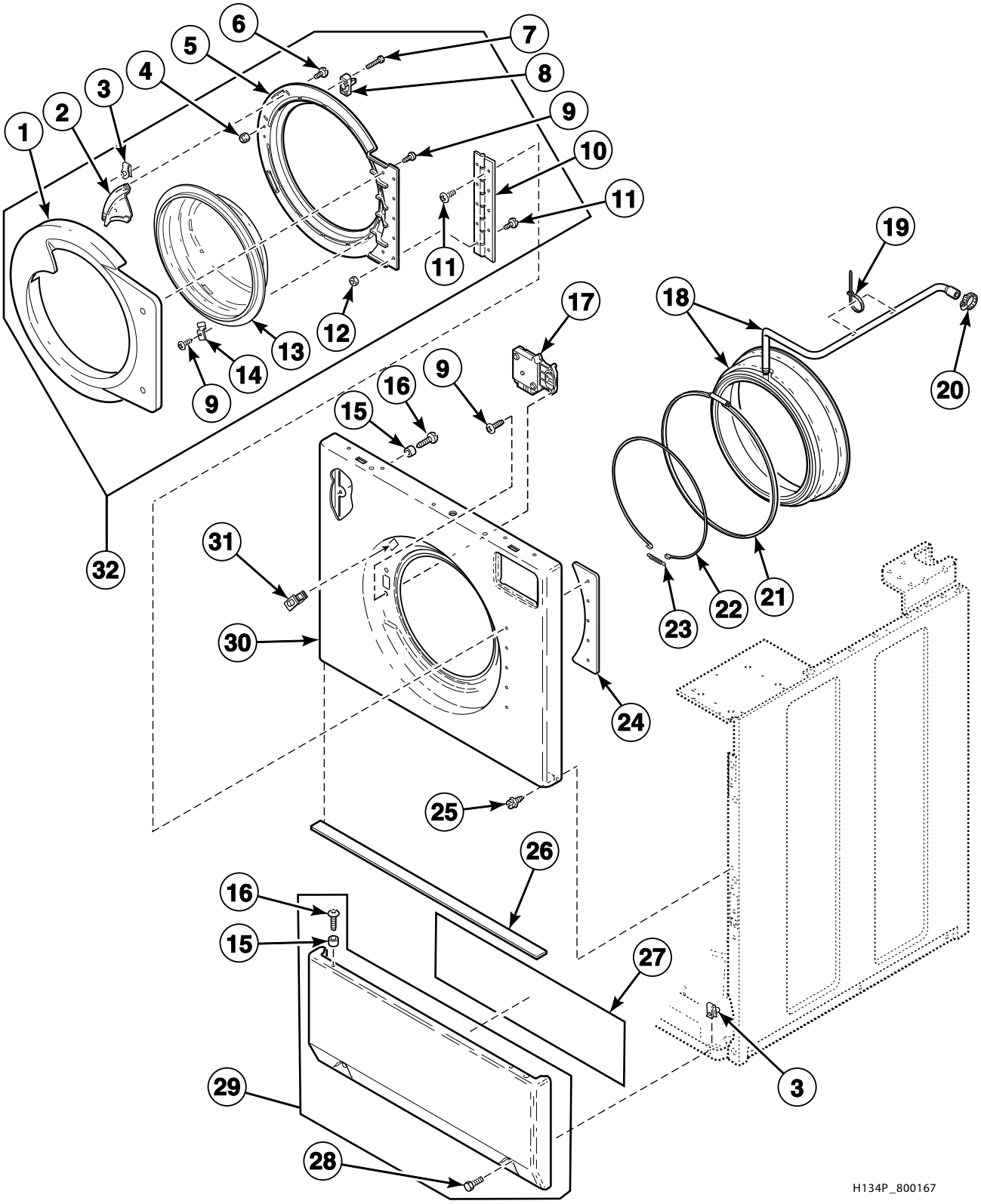

© Copyright, Alliance Laundry Systems LLC – DO NOT COPY or TRANSMIT

Front Panel, Newer Style Door Assembly and Door Seal

REF	PART NO.	DESCRIPTION	COMMENTS
1	800341W	Door Bezel	White
	800341L	Door Bezel	Almond
	800341Q	Door Bezel	Bisque
2	800342	Door Handle	
3	36020	Nut	
4	685846	Nut	
5	800340	Inner Door Bezel	
6	800528	Screw	
7	801993	Screw	
8	685430	Locking Catch	
9	800548	Screw	
10	802934	Door Hinge	
11	801019	Screw	
12	23951	Nut	
13	800343P	Door Glass	
14	800906	Hold-Down Clip	
15	56079	Panel Locator	
16	39733	Screw	
17	685429	Door Latch/Switch Assembly	
18	800232P	Door Seal and Hose Assembly Kit	Black
	801784P	Door Seal and Hose Assembly Kit	Gray
19	39037	Cable Tie	
20	36801	Hose Clamp	
21	685743P	Door Seal Clamp	
22	800438	Wire Clamp Ring	
23	800346	Extension Spring	
24	802412	Hinge Plate	
25	D503661	Screw	
26	N/A	Foam Tape	
27	36204	Front Panel Pad	1 inch by 26 inches
28	801045	Screw	
29	D514250WP	Access Panel Assembly	White
	D510069LP	Access Panel	Almond
	D514250Q	Access Panel Assembly	Bisque
30	800336WP	Front Panel	White
	800336LP	Front Panel	Almond
	800336QP	Front Panel	Bisque
31	800211	Door Switch	
32	800436WP	Door Assembly	White; Includes items 1-14
	800436LP	Door Assembly	Almond; Includes items 1-14
	800436QP	Door Assembly	Bisque; Includes items 1-14

N/A = Part no longer available

© Copyright, Alliance Laundry Systems LLC – DO NOT COPY or TRANSMIT

Dispenser Assembly

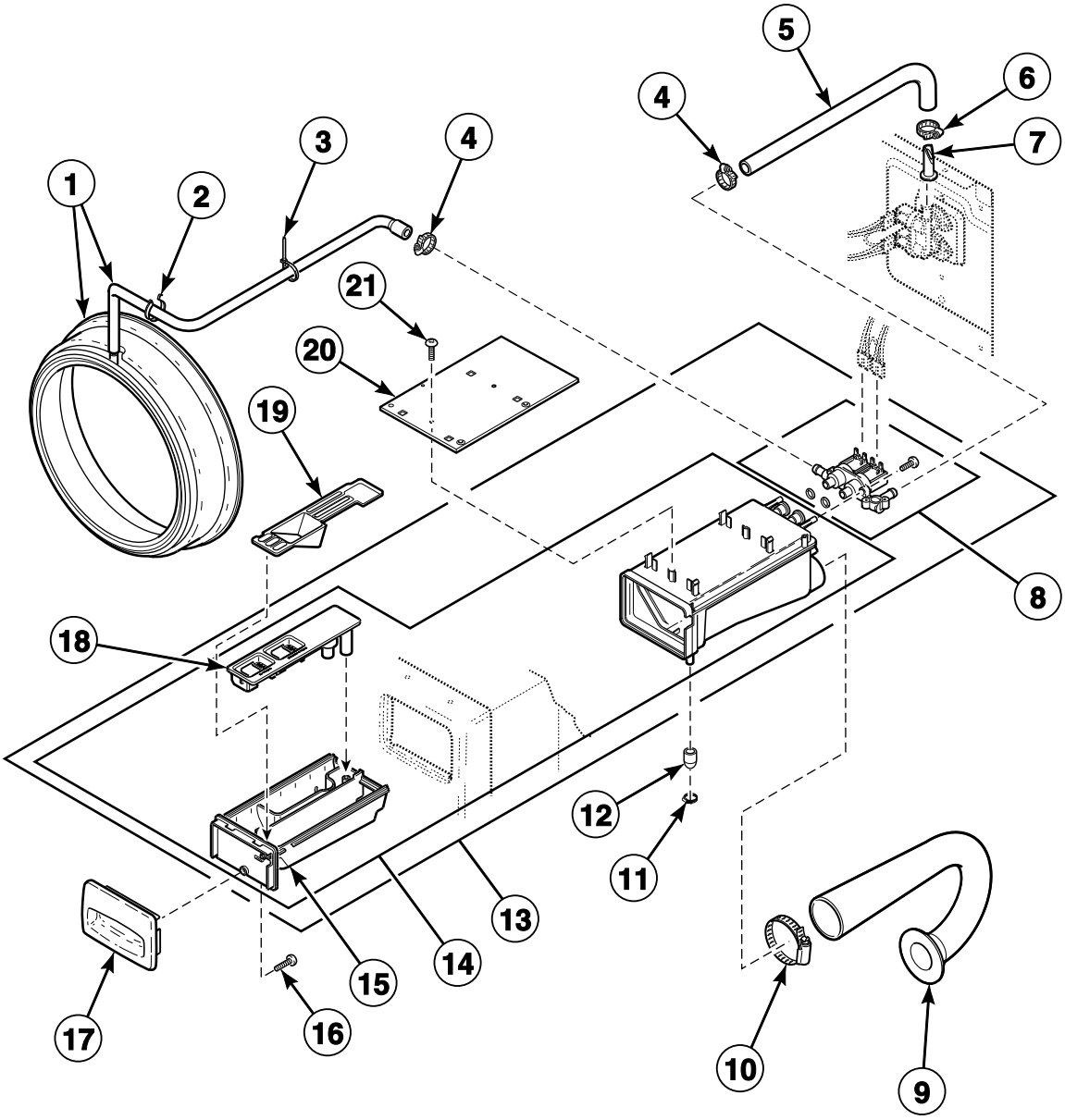

FLW820P_800167

© Copyright, Alliance Laundry Systems LLC – DO NOT COPY or TRANSMIT

Dispenser Assembly

REF	PART NO.	DESCRIPTION	COMMENTS
1	800232P	Door Seal and Hose Assembly Kit	Black
	801784P	Door Seal and Hose Assembly Kit	Gray
2	687500	Wire Clip	
3	39037	Cable Tie	
4	36801	Hose Clamp	
5	801464	Valve-to-Dispenser Inlet Hose	
6	800803	Hose Clamp	
7	34500	Backflow Preventer	
8	685766P	Valve Kit	
9	800331	Dispenser-to-Tub Hose	
10	685725	Hose Clamp	
11	F200206	Hose Clamp	Use if pump-to-dispenser hose is removed
12	801746	Cap	Use if pump-to-dispenser hose is removed
13	685756P	Dispenser	Includes items 8, 14, 15 and 18
14	801476P	Dispenser Assembly	Includes items 15 and 18
15	685757P	Dispenser Drawer	
16	800548	Screw	
17	685715WP	Dispenser Drawer Front	White
	685715L	Dispenser Drawer Front	Almond
	685715QP	Dispenser Drawer Front	Bisque
18	685716	Insert	
19	800899	Detergent Cover	
20	801024	Dispenser Plate	
21	801001	Screw	

© Copyright, Alliance Laundry Systems LLC – DO NOT COPY or TRANSMIT

Mixing Valve and Fill Hose

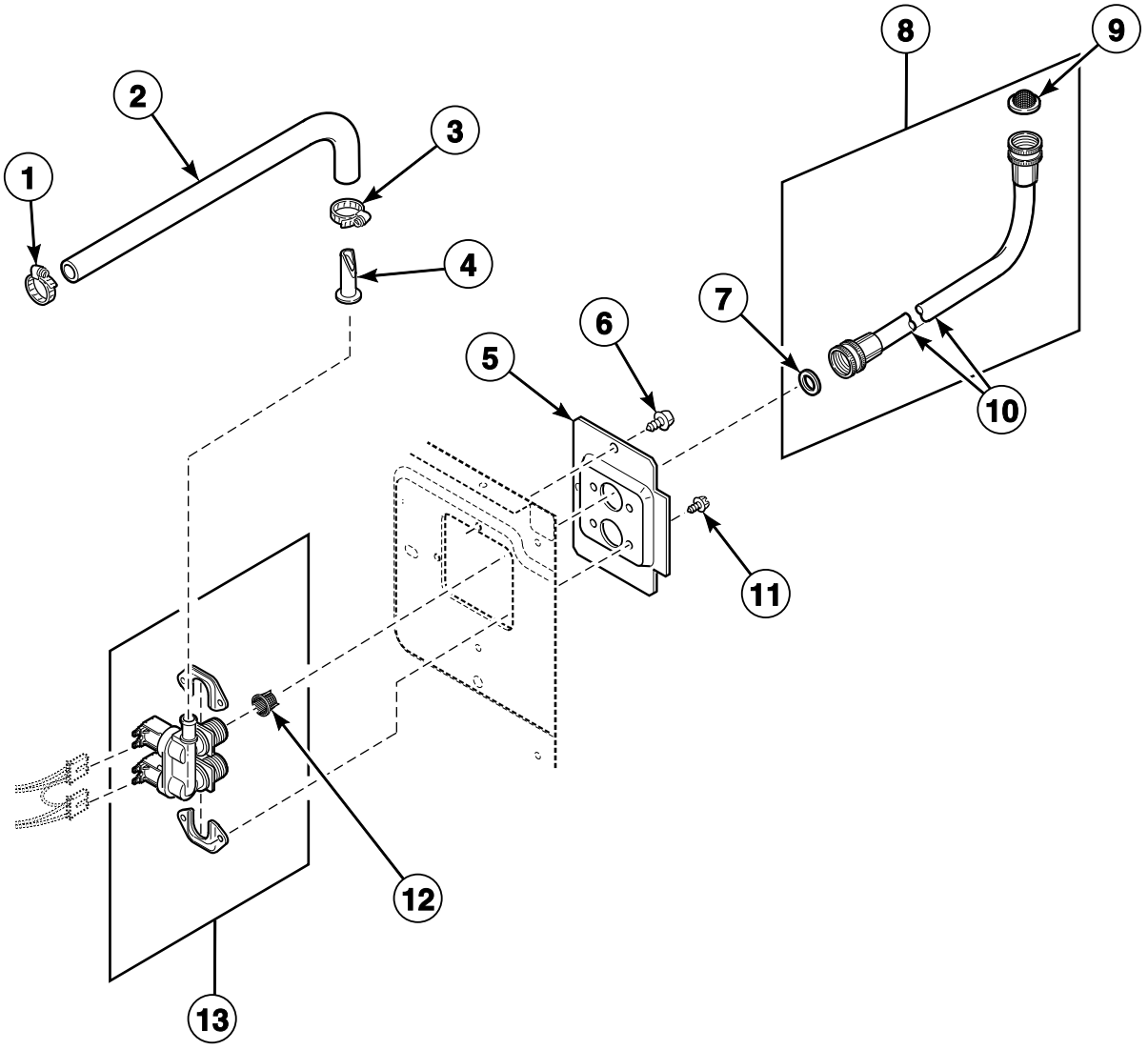

FLW881P_800167

© Copyright, Alliance Laundry Systems LLC – DO NOT COPY or TRANSMIT

Mixing Valve and Fill Hose

REF	PART NO.	DESCRIPTION	COMMENTS
1	36801	Hose Clamp	
2	801464	Valve-to-Dispenser Inlet Hose	
3	800803	Hose Clamp	
4	34500	Backflow Preventer	
5	800323	Mixing Valve Plate	
6	D503661	Screw	
7	20290	Washer	
8	F200116	Water Hose	5 feet; Includes items 7, 9 and 10
9	803615	Washer	Filter screen
	802254	Washer	Flow restrictor; Water pressure reducer; Available for water pressure up to but not exceeding 120 psi
10	20617	Fill Hose	8 feet
	20618	Fill Hose	10 feet
11	D501086	Screw	
12	802926	Mixing Valve Screen	
13	802220P	Mixing Valve	

© Copyright, Alliance Laundry Systems LLC – DO NOT COPY or TRANSMIT

Outer Tub, Front and Clamp Ring

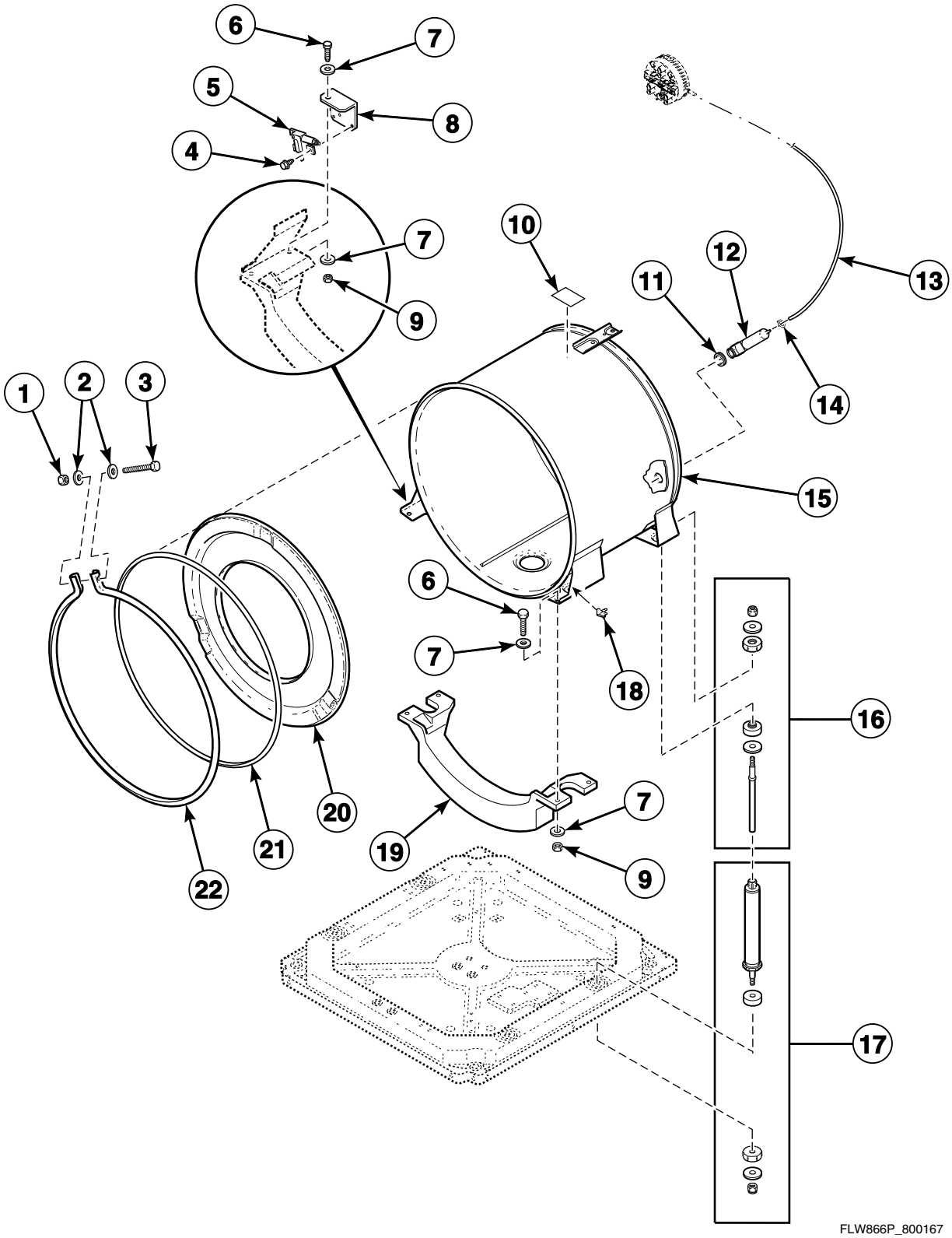

© Copyright, Alliance Laundry Systems LLC – DO NOT COPY or TRANSMIT

Outer Tub, Front and Clamp Ring

REF	PART NO.	DESCRIPTION	COMMENTS
1	F430218	Nut	
2	800457	Washer	
3	800462	Screw	
4	D503661	Screw	
5	806512	Out-of-Balance Switch Assembly Kit	
6	800461	Screw	
7	M400081	Washer	
8	800663	Switch Mounting Bracket	
9	800452	Nut	
10	D500049	Warning Label	
11	29175	Grommet	
12	30907	Pressure Bulb	
13	800648P	Tubing	
14	39282	Hose Clamp	
15	801081P	Outer Tub Assembly	
16	800622P	Tub Shock Absorber Kit	
17	800623P	Base Shock Absorber Kit	
18	00161	Grounding Clip	
19	800205	Ballast Weight	
20	800430	Tub Front Assembly	
21	800432P	Tub Front Seal	
22	800312	Clamp Ring	

© Copyright, Alliance Laundry Systems LLC – DO NOT COPY or TRANSMIT

Inner Basket, Trunnion, Bearing Housing and Pulley

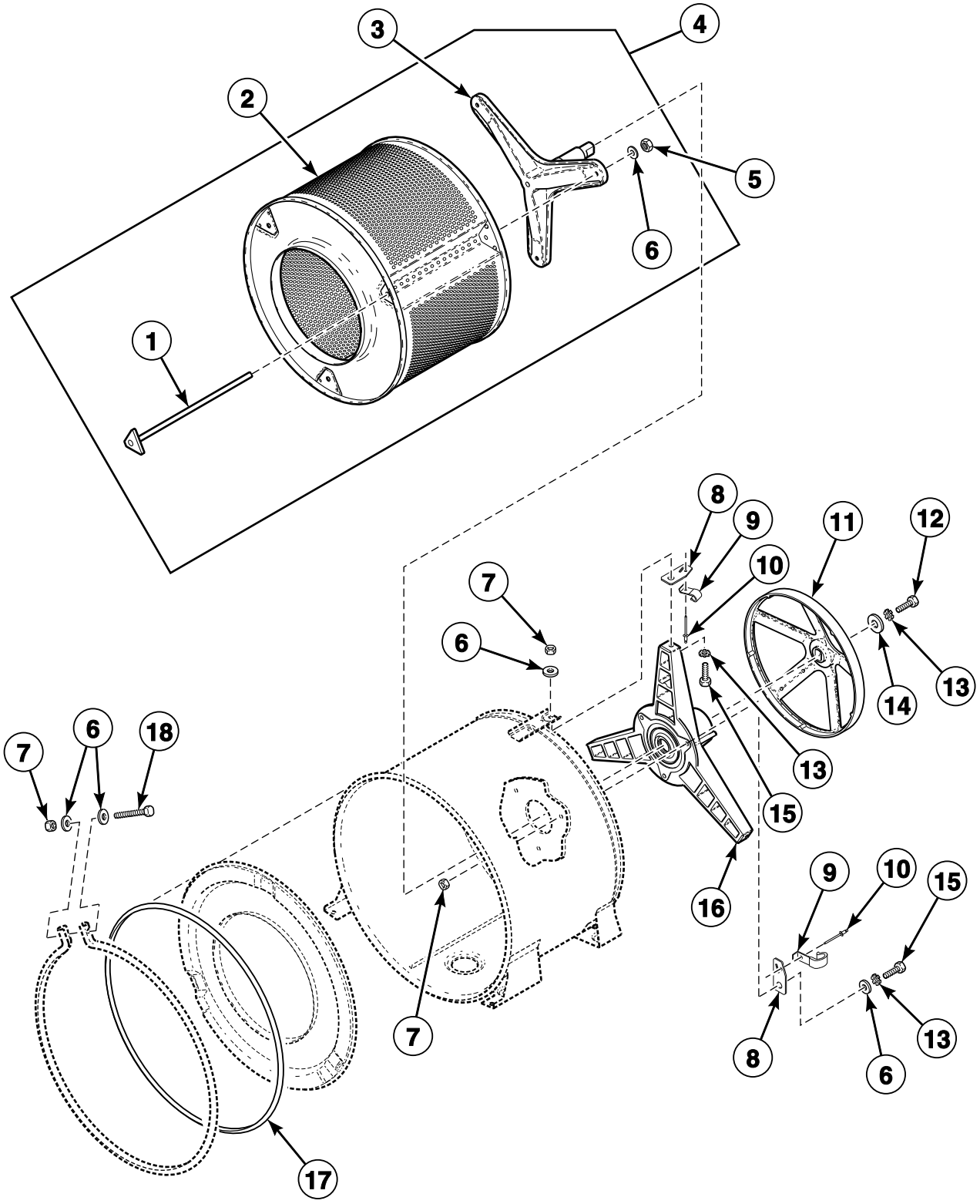

© Copyright, Alliance Laundry Systems LLC – DO NOT COPY or TRANSMIT

Inner Basket, Trunnion, Bearing Housing and Pulley

REF	PART NO.	DESCRIPTION	COMMENTS
	27604P	Anti-Seize Compound	Pulley to inner basket shaft
	838P3	Hardware Kit	Includes (8) of item 6, (7) each of items 7 and 13, (6) of item 10, (1) each of items 12,14,17, 18 and 27604P Anti-Seize Compound
	RB160001	Bearing Kit	
1	800666	Tension Rod Assembly	
2	803007P	Inner Basket Assembly	Includes (3) each of items 1, 5, 6, and 838P3 Hardware Kit
3	800749P	Trunnion Shaft and Hardware Kit	Includes (3) each of items 1, 5, 6, and 838P3 Hardware Kit
4	800429P	Inner Basket Assembly	Includes items 2, 3, (3) each of items 1, 5, 6, and 838P3 Hardware Kit
5	685844	Nut	
6	800457	Washer	
7	F430218	Nut	
8	800552	Hose Mounting Plate	
9	800553	Hose Clip	
10	685847	Pop Rivet	
11	800866	Driven Pulley	
12	685831	Screw	Left hand thread
13	M403958	Washer	
14	807679	Washer	
15	M400043	Screw	
16	800428P	Bearing Housing Kit	Includes 838P3 Hardware Kit
17	800432P	Tub Front Seal	
18	800462	Screw	

© Copyright, Alliance Laundry Systems LLC – DO NOT COPY or TRANSMIT

Motor and Belt

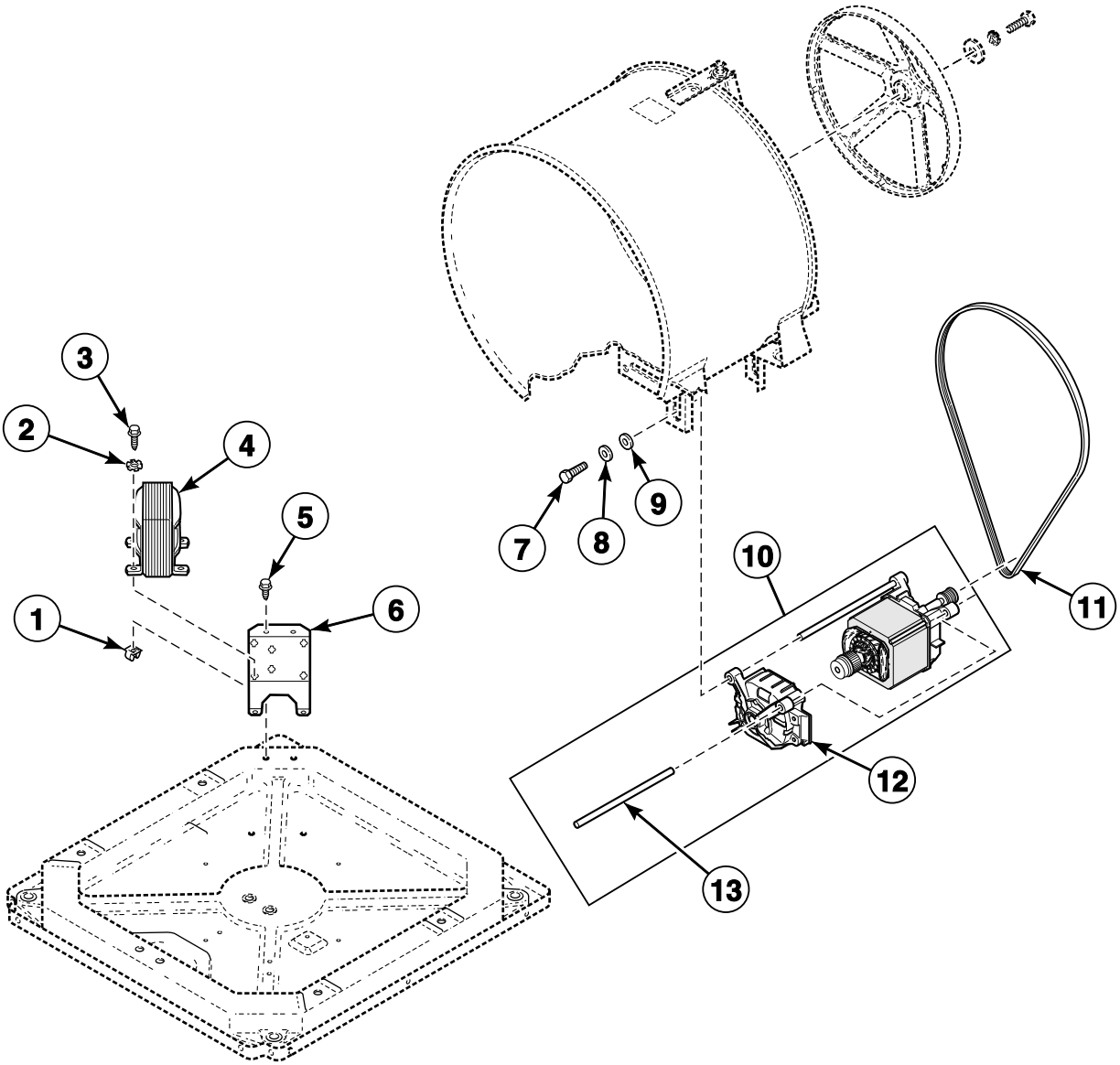

FLW937P_800167

© Copyright, Alliance Laundry Systems LLC – DO NOT COPY or TRANSMIT

Motor and Belt

REF	PART NO.	DESCRIPTION	COMMENTS
1	70030501	Expansion Clip	
2	M400014	Washer	
3	M411072	Screw	
4	686513P	Transformer	
5	D503661	Screw	
6	N/A	Transformer Bracket	
7	M400057	Screw	
8	02834	Washer	
9	M400080	Washer	
10	685639P	Motor Assembly	230 Volt; Includes item 12 and 2 of item13
11	800319P	Drive Belt	
12	738P3	Motor Brush Kit	
13	801062	Motor Mount Rod	

N/A = Part no longer available

© Copyright, Alliance Laundry Systems LLC – DO NOT COPY or TRANSMIT

Hoses and Pump

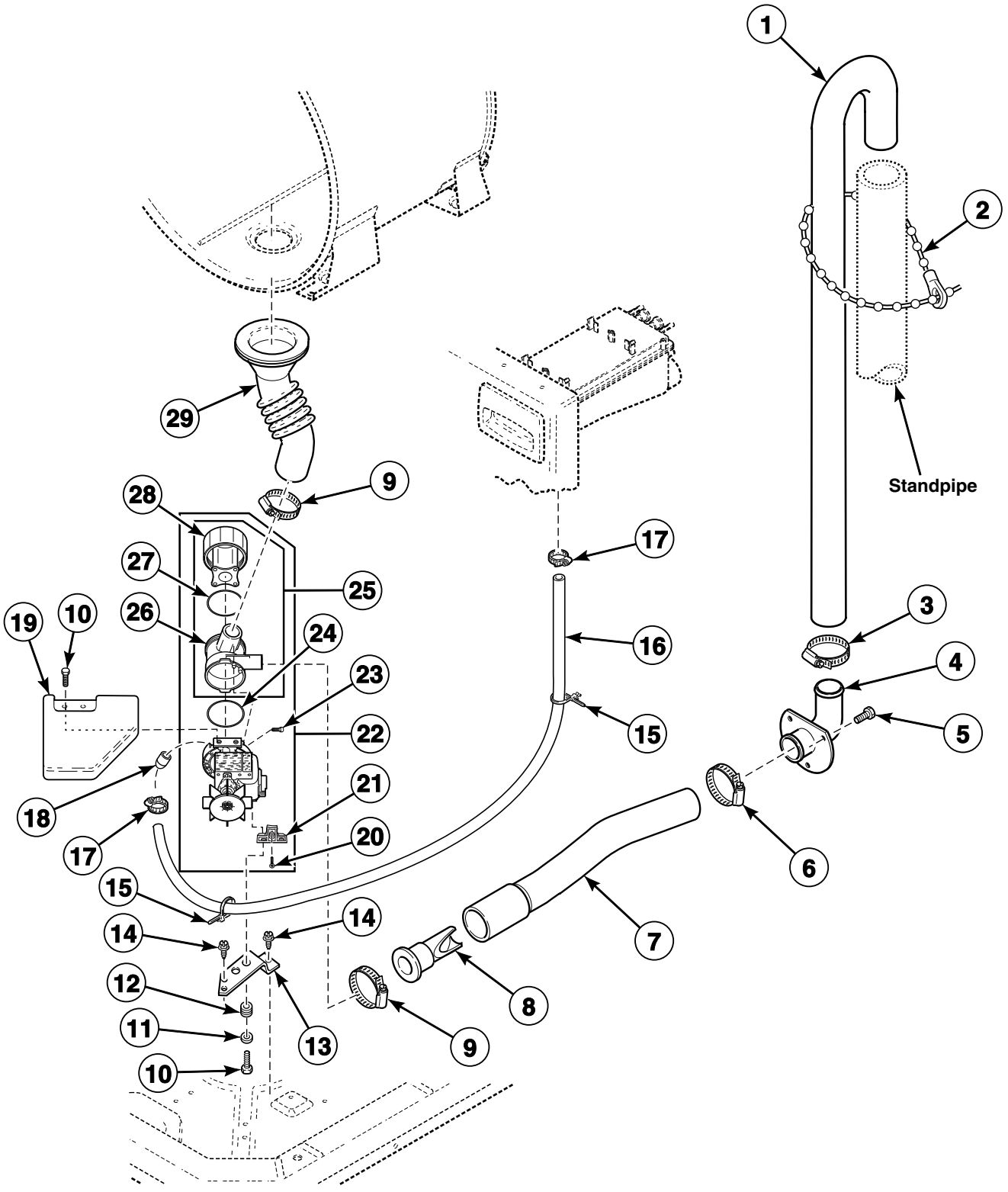

© Copyright, Alliance Laundry Systems LLC – DO NOT COPY or TRANSMIT

Hoses and Pump

REF	PART NO.	DESCRIPTION	COMMENTS
1	27154	Drain Hose	
2	33489	Standpipe Strap	
3	20211	Hose Clamp	
4	35766	Drain Hose Elbow	
5	52909	Screw	
6	20391	Hose Clamp	
7	685737	Pump-to-Elbow Hose	
8	800310	Backflow Preventer	
9	36802	Hose Clamp	
10	38096	Screw	Metric; Use with 685703 Drain Pump
	D501285	Screw	Use with 801015 Drain Pump
11	800465	Washer	Use with 685703 and 801015 Drain Pump
12	802218	Grommet	Use with 685703 and 801015 Drain Pump
13	802219	Pump Bracket	Use with 685703 and 801015 Drain Pump
	802626	Pump Mount Bracket	Use with 802623 Drain Pump
14	D503661	Screw	
15	38663	Wire Tie	Push mount
16	800424	Pump-to-Dispenser Hose Assembly	Use with 685703 Drain Pump
17	F200206	Hose Clamp	Use with 685703 Drain Pump
18	801112	Nozzle Cap	Use with 685703 Drain Pump
19	38067	Pump Shield	Use with 685703 Drain Pump
20	802430	Screw	Use with 801015 and 802623 Drain Pump
21	802432	Pump Mount	Use with 801015 Drain Pump
22	888P3	Drain Pump Kit	Includes wire harness adapter
23	802431	Screw	Use with 801015 and 802623 Drain Pump
24	802487	O-Ring	Use with 685703 Drain Pump
	802429P	O-Ring	Use with 801015 and 802623 Drain Pump
25	801209	Pump Housing Assembly	Includes items 26-28; Use with 685703 Drain Pump
	802434P	Pump Housing Assembly	Includes items 26-28; Use with 801015 and 802623 Drain Pump
26	801208	Pump Housing	Use with 685703 Drain Pump
	802428	Pump Housing	Use with 801015 and 802623 Drain Pump
27	801207	O-Ring	Use with 685703 Drain Pump
	802427	Gasket	Use with 801015 and 802623 Drain Pump
28	801206P	Lid Assembly	Includes filter; Use with 685703 Drain Pump
	802426P	Lid Assembly	Includes filter; Use with 801015 and 802623 Drain Pump
29	800317	Tub-to-Pump Hose	
	27615P	Sealant	Tub-to-pump hose to outer tub

© Copyright, Alliance Laundry Systems LLC – DO NOT COPY or TRANSMIT

Base, Panels and Rear Panel

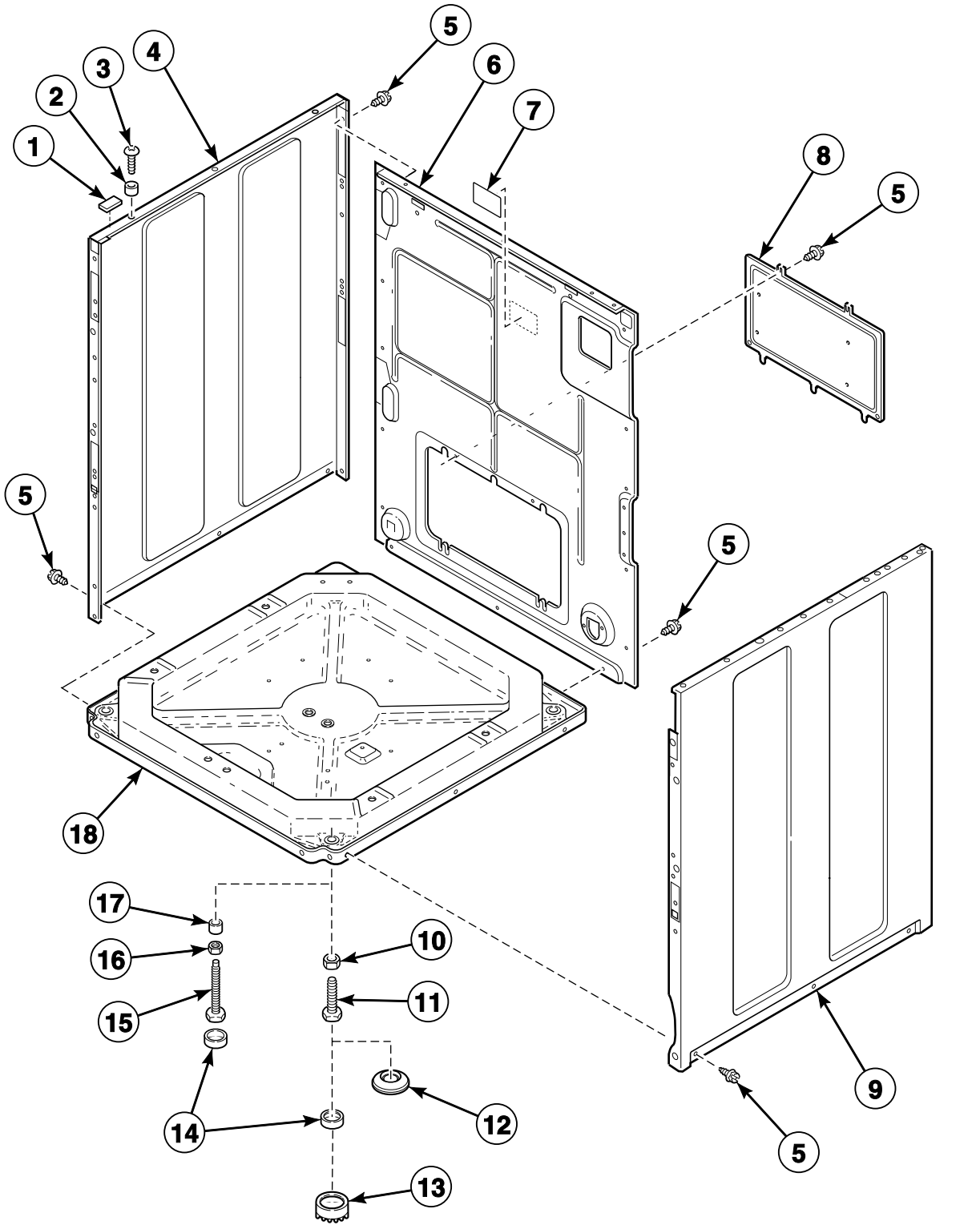

FLW1027P_800167

© Copyright, Alliance Laundry Systems LLC – DO NOT COPY or TRANSMIT

Base, Panels and Rear Panel

REF	PART NO.	DESCRIPTION	COMMENTS
1	56128	Bumper Pad	
2	56079	Panel Locator	
3	39733	Screw	
4	800004WP	Cabinet Panel Kit	White; Left; Includes corner gusset with hardware
	800004LP	Cabinet Panel Kit	Almond; Left; Includes corner gusset with hardware
	800004QP	Cabinet Panel Kit	Bisque; Left; Includes corner gusset with hardware
5	D503661	Screw	
6	800010P	Rear Panel	Includes corner gusset with hardware
7	685928	Left Hand Thread Label	
8	800011	Rear Access Panel	
9	806492	Side Panel Kit	White; Right; Includes 801024 Dispenser Plate with hardware
	N/A	Side Panel Kit	Almond; Right; Includes 801024 Dispenser Plate with hardware
	800005QP	Side Panel Kit	Bisque; Right; Includes 801024 Dispenser Plate with hardware
10	21899	Nut	For 1/2 inch leveling leg
11	34319	Leveling Leg	1/2 inch leveling leg
12	155P3	Anchor	Includes 4 rubber discs with adhesive backing
13	D501855	Rubber Foot	Use to prevent movement on smooth surface floor coverings; Install over 2 existing front rubber feet (item 14); For 1/2 inch leveling leg
14	34318	Rubber Foot	
15	800014	Leveling Leg	3/8 inch leveling leg
16	20274	Nut	For 3/8 inch leveling leg
17	800015	Leveling Leg Spacer	For 3/8 inch leveling leg
18	803876	Base Assembly	Uses 1/2 inch leveling leg

N/A = Part no longer available

© Copyright, Alliance Laundry Systems LLC – DO NOT COPY or TRANSMIT

Shipping Materials

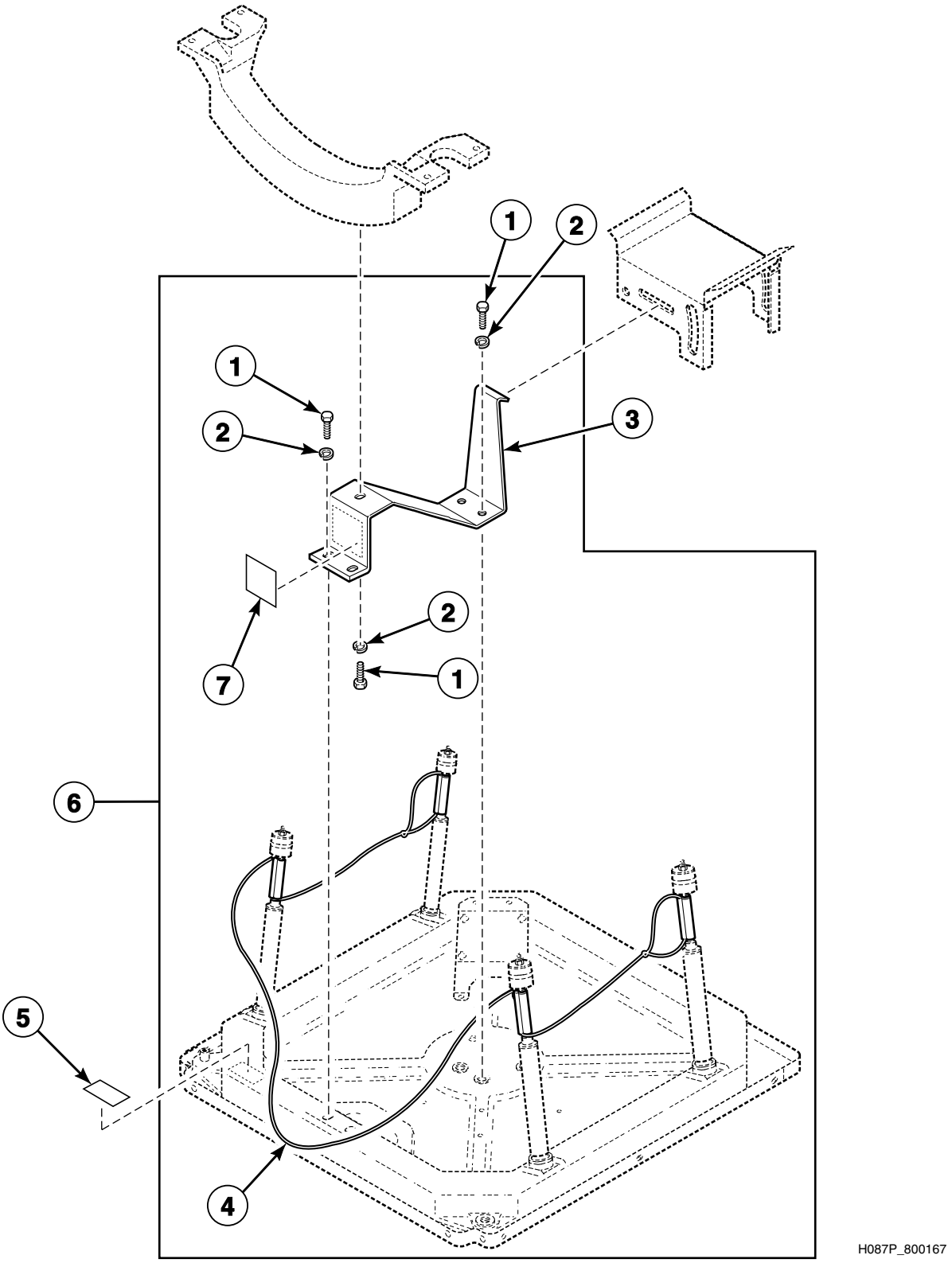

© Copyright, Alliance Laundry Systems LLC – DO NOT COPY or TRANSMIT

Shipping Materials

REF	PART NO.	DESCRIPTION	COMMENTS
1	M400043	Screw	
2	M400014	Washer	
3	802890	Shipping Bracket	
4	802933P	Shipping Cord and Brace Assembly	
5	D500049	Warning Label	
6	728P3	Shipping Materials Kit	Includes items 1-4 and 7
7	807552	Shipping Bracket Label	

© Copyright, Alliance Laundry Systems LLC – DO NOT COPY or TRANSMIT

Wire Ties, Harness Clips and Lead-In Cord

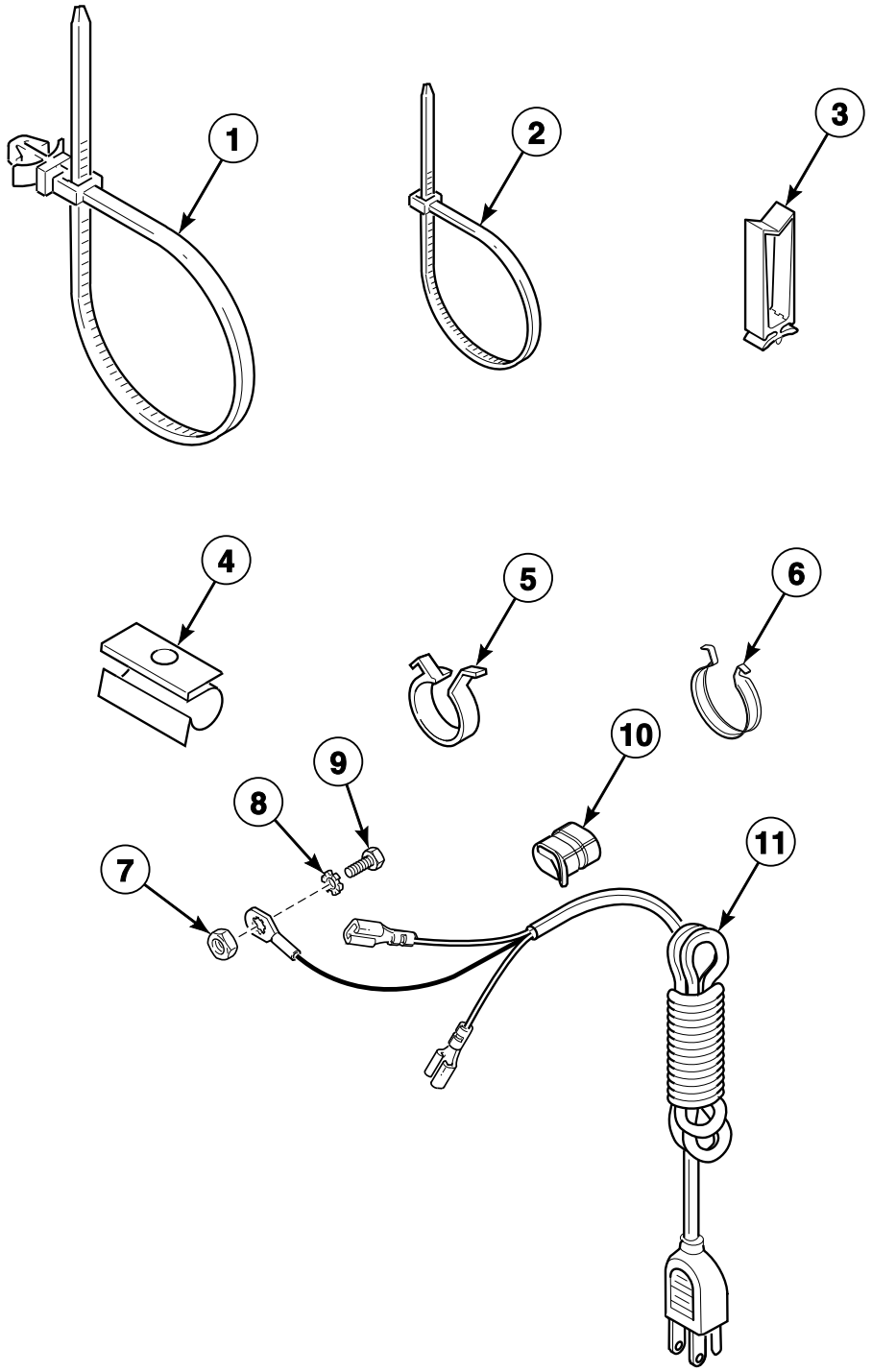

H130P_800167

© Copyright, Alliance Laundry Systems LLC – DO NOT COPY or TRANSMIT

Wire Ties, Harness Clips and Lead-In Cord

REF	PART NO.	DESCRIPTION	COMMENTS
1	38663	Wire Tie	Push mount
2	55881	Harness Strap	
3	70366201	Wire Clip	
4	36985	Hose Clip	
5	D504034	Wire Clip	Small
6	687500	Wire Clip	Large
7	03673	Nut	
8	03815	Washer	
9	N/A	Screw	
10	38384	Strain Relief	
11	34458	Lead-In Cord	

N/A = Part no longer available

© Copyright, Alliance Laundry Systems LLC – DO NOT COPY or TRANSMIT

Special Tools

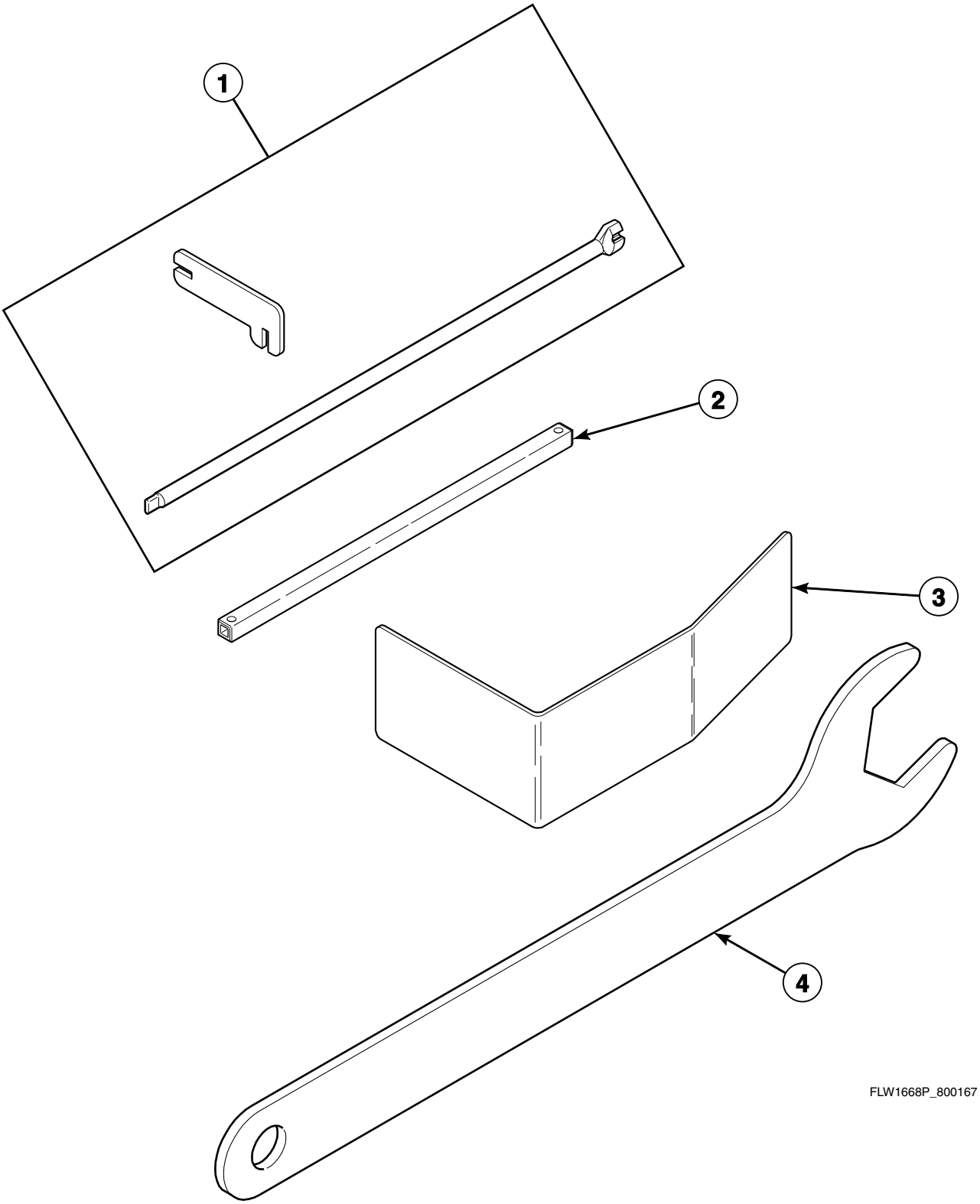

© Copyright, Alliance Laundry Systems LLC – DO NOT COPY or TRANSMIT

Special Tools

REF	PART NO.	DESCRIPTION	COMMENTS
1	CK096	Mounting Tool Kit	Use to install and remove electronic coin drop
2	310P4	Ratchet Extension Tool	1/4 inch; Use to install and remove non-electronic coin drop
3	318P4	Dispenser Drawer Tool	Use to remove dispenser drawer
4	392P4	Wrench	Use to adjust leveling leg nuts

© Copyright, Alliance Laundry Systems LLC – DO NOT COPY or TRANSMIT

Labels (Drawing 1 of 2)

Models HWF561*E1102, HWF761*E1102, SWF561*E, SWF661*E and SWF761*E

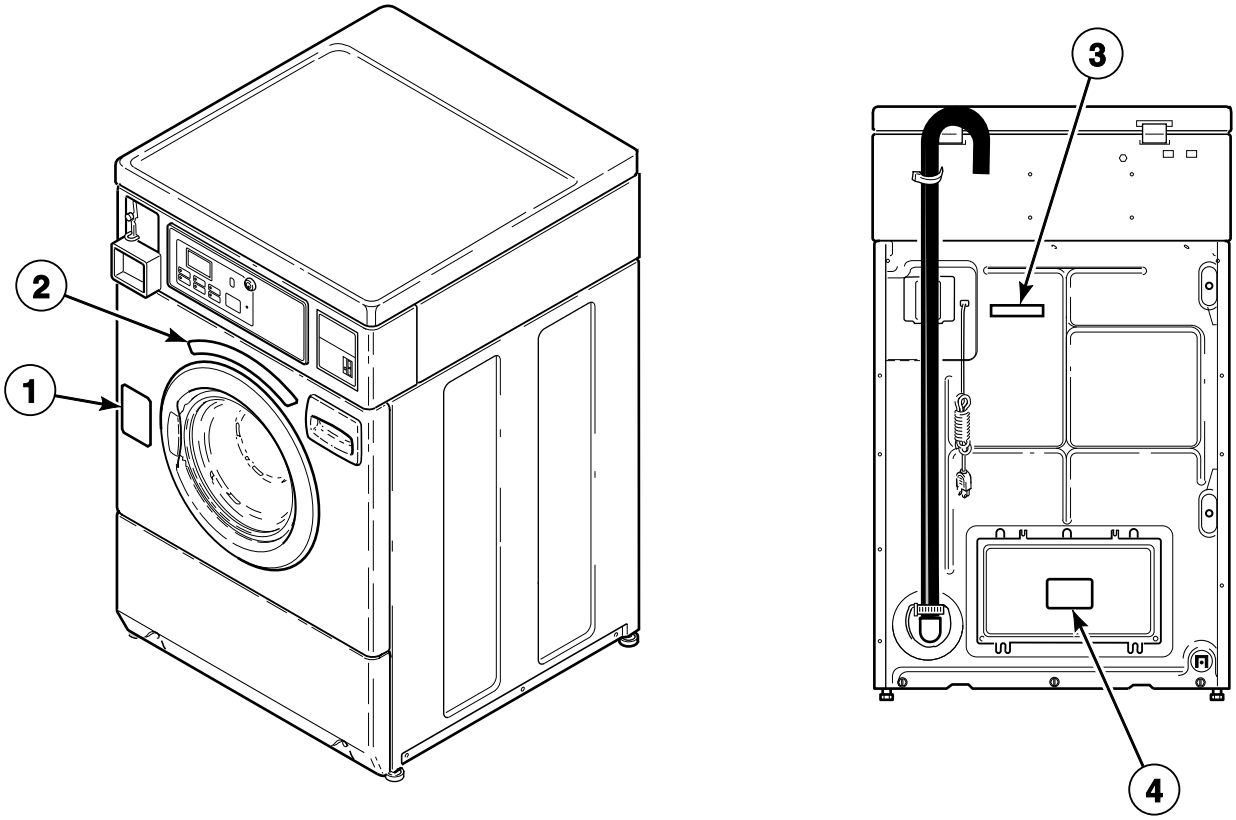

H068P_800167

© Copyright, Alliance Laundry Systems LLC – DO NOT COPY or TRANSMIT

Labels (Drawing 1 of 2)

REF	PART NO.	DESCRIPTION	COMMENTS
1	685947	Door Locked Label	
2	800420	Oversudsing Label	English
	802839	Oversudsing Label	Quebec French
	800621	Oversudsing Label	Spanish
3	D505281	Disconnect Power Warning Label	English
	D500316	Warning Label	Quebec French
4	D500049	Warning Label	English
	D500314	Warning Label	Quebec French

*** Add Letter To Designate Color. L - Almond Q - Bisque W - White**

© Copyright, Alliance Laundry Systems LLC – DO NOT COPY or TRANSMIT

Labels (Drawing 2 of 2)

All Models Except HWF561*E1102, HWF761*E1102, SWF561*E, SWF661*E and SWF761*E

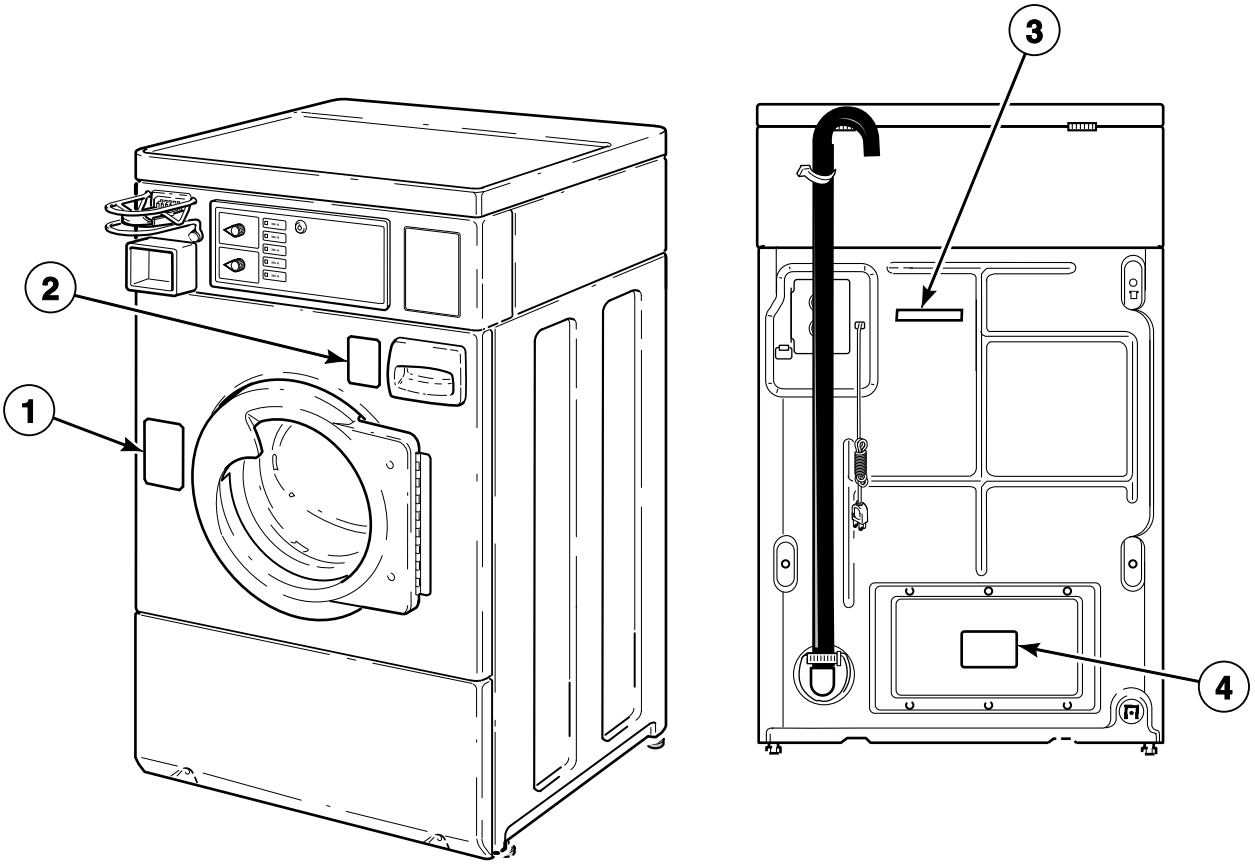

H132P_800167

© Copyright, Alliance Laundry Systems LLC – DO NOT COPY or TRANSMIT

Labels (Drawing 2 of 2)

REF	PART NO.	DESCRIPTION	COMMENTS
1	685947	Door Locked Label	
2	800420	Oversudsing Label	English
	802839	Oversudsing Label	Quebec French
	800621	Oversudsing Label	Spanish
3	D505281	Disconnect Power Warning Label	English
	D500316	Warning Label	Quebec French
4	D500049	Warning Label	English
	D500314	Warning Label	Quebec French

*** Add Letter To Designate Color. L - Almond Q - Bisque W - White**

© Copyright, Alliance Laundry Systems LLC – DO NOT COPY or TRANSMIT

Wire Harnesses and Wires

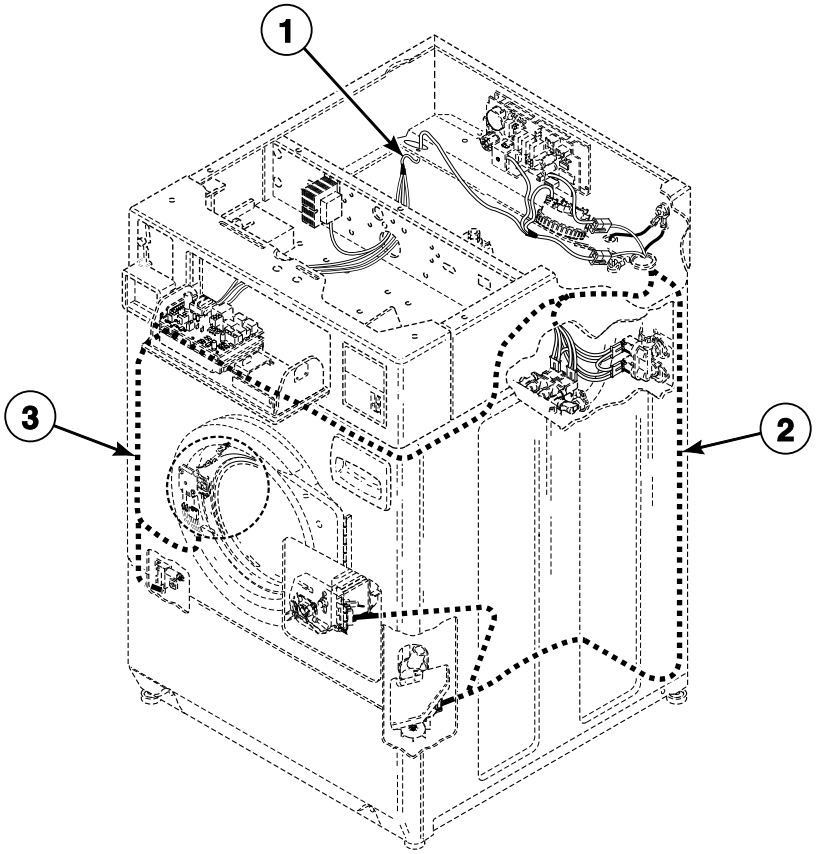

FLW936P_800167

© Copyright, Alliance Laundry Systems LLC – DO NOT COPY or TRANSMIT

Wire Harnesses and Wires

REF	PART NO.	DESCRIPTION	COMMENTS
	45001	18 Gauge Wire	Black; Order wire by foot and terminals and connectors as required
	45380	12 Gauge Wire	Orange; Order wire by foot and terminals and connectors as required
1	N/A	Control Harness	Models HWF561*E1102, HWF561*H1102, HWF761*E1102 and SWF761*E
	687585P	Wire Harness Assembly	Models SWF561*E, SWF661*E, SWF661*H and SWF761*H
	800123P	Control Wire Harness Assembly	All other models
2	687579P	Harness Assembly	
3	687574P	Base Wire Harness	

*** Add Letter To Designate Color. L - Almond Q - Bisque W - White**

N/A = Part no longer available

NOTE: Individual wires are not available separately. Order complete harness, or order wire by the foot. When applying terminals to wires, it is recommended that the terminals be soldered to the wires.

© Copyright, Alliance Laundry Systems LLC – DO NOT COPY or TRANSMIT

Notes

© Copyright, Alliance Laundry Systems LLC – DO NOT COPY or TRANSMIT

Parts Index

A

Access Panel
D510069LP 23, 25
Access Panel Assembly
D514250Q 23, 25
D514250WP 23, 25
Anchor
155P3 39
Anti-Seize Compound
27604P 33
Audit Switch Bracket
800379 11

B

Backflow Preventer
34500 ..... 27, 29
800310 37
Ballast Weight
800205 31
Base Assembly
803876 39
Base Shock Absorber Kit
800623P 31
Base Wire Harness
687574P 51
Bearing Housing Assembly
800428P 33
Bearing Kit
RB160001 33
Bolt
D512505 19
29651 7
Bumper Pad
56128 ..... 7, 39

C

Cabinet Panel Kit
800004LP 39
800004QP 39
800004WP 39
Cable Tie
39037 ..... 25, 27
Cap
801746 27
Card Insert Overlay
D511544 21
D511548 21
Card Reader
D512473 19
Card Reader and Bracket Assembly
D510068P 21
Card Reader Instruction Overlay
38192 19
Card Reader Kit
876P3 19
885P3 19
Card Reader Overlay
800230 21
Card Reader Wire Harness Assembly
686581 19
800125P 21
Central Pay Harness
D511478 5
Clamp Ring
800312 31
Clip
201572 15
Coin Drop
70441601P 13
Coin Drop Assembly
70441602 13
Coin Drop Wire Harness
201104 15
Coin Identification Paper
38725 ..... 13, 15
Communication Board
210095P 11
Communication Connector
210099 11
Control Assembly
800303P 5
803146P 5
Control Kit
800772P 5
Control Panel and Bracket Assembly
685061W 5
800035L 5
800035Q 5
800035W 5
Control Panel Overlay
800033 5
800413 5
800416 5
Control Shield
801371 ..... 9, 11
Control Wire Harness Assembly
800123P 51

D

Detergent Cover
800899 27
Diagnostic Wire Harness Assembly
800374 5
Disconnect Power Warning Label
D505281 ..... 47, 49
Dispenser
685756P 27
Dispenser Assembly
801476P 27
Dispenser Drawer
685757P 27

N/A items do not appear in index.

© Copyright, Alliance Laundry Systems LLC – DO NOT COPY or TRANSMIT

Dispenser Drawer Front
685715L 27
685715QP 27
685715WP 27
Dispenser Drawer Tool
318P4 45
Dispenser Plate
801024 27
Dispenser-to-Tub Hose
800331 27
Door Assembly
800436LP 25
800436QP 25
800436WP 25
Door Bezel
800341L 25
800341Q 25
800341W 25
Door Glass
800343P 25
Door Handle
685438 23
800342 25
Door Hinge
802934 25
Door Hinge Assembly
685460 23
Door Latch/Switch Assembly
685429 ..... 23, 25
Door Locked Label
685947 ..... 23, 47, 49
Door Seal and Hose Assembly Kit
800232P 23, 25, 27
801784P 23, 25, 27
Door Seal Clamp
685743P 23, 25
Door Switch
800211 ..... 23, 25
Door Switch Bracket
38087 9
Drain Hose
27154 37
Drain Hose Elbow
35766 37
Drain Pump Kit
888P3 37
Drive Belt
800319P 35
Driven Pulley
800866 33
Dual Overlay
39073 13

E

Electronic Coin Drop Kit
CK115 15
Expansion Clip
70030501 35
Extension Spring
800346 ..... 23, 25

F

Fill Hose
20617 29
20618 29
Front Overlay
801050 5
801053 5
Front Panel
800336LP 25
800336QP 25
800336WP 25
Front Panel Assembly
800435LP 23
800435QP 23
800435WP 23
Front Panel Pad
36204 25
Fuse
F350138 ..... 9, 11

G

Gasket
802427 37
Grommet
29175 31
802218 37
Grounding Clip
00161 31

H

Hardware Kit
838P3 33
Harness
D512501 19
D512503 19
Harness Assembly
687579P 51
802904P 13
802905 ..... 13, 15
Harness Strap
55881 ..... 23, 43
Hinge
D511036 7
Hinge Plate
685470 23
802412 25
Hold-Down Clip
800906 25
Hose Clamp
F200206 ..... 27, 37
20211 37
20391 37
36801 ..... 23, 25, 27, 29
36802 37
39282 31
685725 27
800803 ..... 27, 29
Hose Clip
36985 ..... 9, 11, 43

N/A items do not appear in index.

© Copyright, Alliance Laundry Systems LLC – DO NOT COPY or TRANSMIT

800553 33
Hose Mounting Plate
800552 33

I

Inner Basket Assembly
800429P 33
803007P 33
Inner Door Bezel
800340 25
Insert
685716 27
Instruction Label
685942 ..... 13, 17, 19, 21

K

Key
54612 5

L

Lead-In Cord
34458 43
Left Hand Thread Label
685928 39
Leveling Leg
34319 39
800014 39
Leveling Leg Spacer
800015 39
Lid Assembly
801206P 37
802426P 37
Light
32464 5
Lock Cam
27261 5
Lock Kit
27260P 5
Locking Catch
685430 ..... 23, 25

M

Mixing Valve
802220P 29
Mixing Valve Plate
800323 29
Mixing Valve Screen
802926 29
Motor Assembly
685639P 35
Motor Brush Kit
738P3 35
Motor Control Assembly
687539P 9, 11
Motor Mount Rod
801062 35
Mounting Tool Kit
CK096 45
Multiplier Assembly
38571 13

N

Network Board
210157P 11
Network Board Assembly
210016P 11
Network Cable Wire Harness Assembly
800216 11
Network Wire Harness Assembly
800217 11
Nozzle Cap
801112 37
Nut
F430218 ..... 31, 33
03673 43
201216 15
20274 39
21899 39
23951 25
29786 13
29796 7
36020 ..... 7, 25
51236 23
52566 23
685844 33
685846 ..... 23, 25
70054 21
800452 31

O

Opto Coupler
200674P 13
O-Ring
801207 37
802429P 37
802487 37
Outer Tub Assembly
801081P 31
Out-of-Balance Switch Assembly Kit
806512 31
Overlay
201091 15
685510 5
803597 5
Oversudsing Label
800420 ..... 47, 49
800621 ..... 47, 49
802839 ..... 47, 49

P

Panel Locator
56079 ..... 13, 17, 19, 21, 23, 25, 39

N/A items do not appear in index.

© Copyright, Alliance Laundry Systems LLC – DO NOT COPY or TRANSMIT

PC Board Standoff
210098 11
Pop Rivet
685847 ..... 7, 33
Power Supply
D512496 19
D512498 19
Pressure Bulb
30907 31
Pressure Switch
800468P 9, 11
Programming Card
D512499P 19
Pump Bracket
802219 37
Pump Housing
801208 37
802428 37
Pump Housing Assembly
801209 37
802434P 37
Pump Mount
802432 37
Pump Mount Bracket
802626 37
Pump Shield
38067 37
Pump-to-Dispenser Hose Assembly
800424 37
Pump-to-Elbow Hose
685737 37

R

Ratchet Extension Tool
310P4 45
Rear Access Panel
800011 39
Rear Panel
800010P 39
Rivet
685847 7
Rubber Foot
D501855 39
34318 39

S

Screw
D501086 29
D501285 37
D501524 ..... 5, 9, 11, 19
D502431 7
D503661 ..... 9, 11, 23, 25, 29, 31, 35, 37, 39
D503688 ..... 9, 11, 13, 17, 19, 21
M400043 ..... 33, 41
M400057 35
M411072 35
02916 23
23008 7
36048 7
38096 37
39733 ..... 13, 17, 19, 21, 23, 25, 39
52909 37
685831 33
685862 23
800461 31
800462 ..... 31, 33
800528 25
800548 ..... 23, 25, 27
801001 27
801019 25
801045 25
801993 ..... 23, 25
802430 37
802431 37
Sealant
27615P 37
Security Cabinet Front Assembly
D505542W 19
D505699WP 17, 19
D511209L 21
D511209Q 21
D511209WP 21
D511633LP 13
D511633QP 13
D511633WP 13
Shipping Bracket
802890 41
Shipping Bracket Label
807552 41
Shipping Cord and Brace Assembly
802933P 41
Shipping Materials Kit
728P3 41
Side Panel Kit
800005QP 39
806492 39
Single Overlay
38717 13
Snap Bushing
D503235 ..... 9, 11
M402542 ..... 9, 11
Standpipe Strap
33489 37
Strain Relief
38384 43
Switch
D512973 ..... 9, 11
Switch Mounting Bracket
800663 31

T

Tension Rod Assembly
800666 33
Top and Gusset Assembly
802247QP 7
802247WP 7
Top Kit
D510032LP 7
Top Mounting Bracket
D504228 7
Transformer
201375P 15
210018P 11
686513P 35

N/A items do not appear in index.

© Copyright, Alliance Laundry Systems LLC – DO NOT COPY or TRANSMIT

803527P 11
Trunnion Shaft and Hardware Kit
800749P 33
Tub Front Assembly
800430 31
Tub Front Seal
800432P 31, 33
Tub Shock Absorber Kit
800622P 31
Tubing
800648P 31
Tub-to-Pump Hose
800317 37

V

Valve Kit
685766P 27
Valve-to-Dispenser Inlet Hose
801464 ..... 27, 29

W

Warning Label
D500049 ..... 31, 41, 47, 49
D500314 ..... 47, 49
D500316 ..... 47, 49
Washer
M400014 ..... 35, 41
M400017 23
M400080 35
M400081 31
M403958 33
02834 35
03815 43
20290 29
800457 ..... 31, 33
800465 37
802254 29
803615 29
807679 33
Water Hose
F200116 29
Wire Clamp Ring
800438 ..... 23, 25
Wire Clip
D504034 43
687500 ..... 27, 43
70366201 43
Wire Guard
201595P 13
Wire Harness Assembly
687585P 51
Wire Tie
38663 ..... 37, 43
Wire, 12 Gauge
45380 51
Wire, 18 Gauge
45001 51
Wrapper and Channel Assembly
D505753QP 13, 17, 19, 21
D505753WP 13, 17, 19, 21
Wrench
392P4 45

N/A items do not appear in index.

© Copyright, Alliance Laundry Systems LLC – DO NOT COPY or TRANSMIT

Notes

© Copyright, Alliance Laundry Systems LLC – DO NOT COPY or TRANSMIT