Washer-Extractor

Pocket Hardmount
UniLinc Control

Refer to page 7 for Model Numbers

Troubleshooting

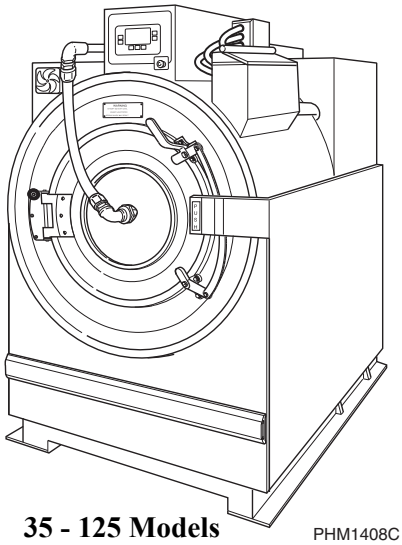

35 - 125 Models PHM1408C

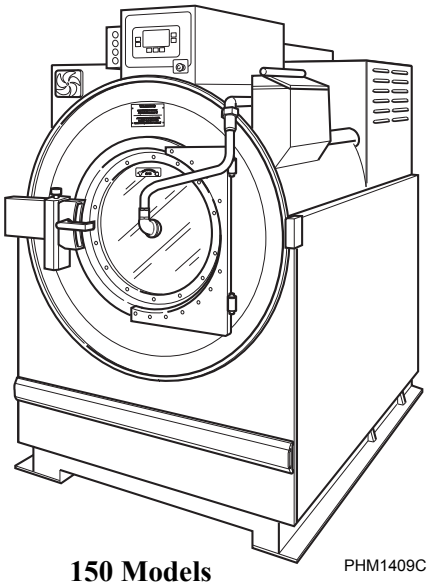

150 Models PHM1409C

Alliance Laundry Systems

www.comlaundry.com

Part No. F8123401R2
March 2011

Table of Contents

Section 1
Safety Information

Throughout this manual and on machine decals, you will find precautionary statements ("CAUTION," "WARNING," and "DANGER") followed by specific instructions. These precautions are intended for the personal safety of the operator, user, servicer and those maintaining the machine.

a **DANGER**
Danger indicates the presence of a hazard that **will** cause **severe** personal injury, death or substantial property damage if the danger is ignored.

a **WARNING**
Warning indicates the presence of a hazard that **can** cause **severe** personal injury, death or substantial property damage if the warning is ignored.

a **CAUTION**
Caution indicates the presence of a hazard that **will** or **can** cause **minor** personal injury or property damage if the caution is ignored.

Additional precautionary statements ("IMPORTANT" and "NOTE") are followed by specific instructions.

IMPORTANT
The word "IMPORTANT" is used to inform the reader of specific procedures where minor machine damage will occur if the procedure is not followed.

NOTE
The word "NOTE" is used to communicate installation, operation, maintenance or servicing information that is important but not hazard related.

General Safety Precautions

In the interest of safety, some general precautions relating to the operation of this machine follow.

WARNING

- **Failure to install, maintain and/or operate this product according to the manufacturer's instructions may result in conditions which can produce serious injury, death and/or property damage.**
- **Do not repair or replace any part of the product or attempt any servicing unless specifically recommended or published in this Service Manual and unless you understand and have the skills to carry out the servicing.**
- **Whenever ground wires are removed during servicing, these ground wires must be reconnected to ensure that the product is properly grounded and to reduce the risk of fire, electric shock, serious injury or death.**

W006R2

WARNING

To reduce the risk of electric shock, fire, explosion, serious injury or death:
- **Disconnect electric power to the washer-extractor before servicing.**
- **Never start the washer-extractor with any guards/panels removed.**
- **Whenever ground wires are removed during servicing, these ground wires must be reconnected to ensure that the washer-extractor is properly grounded.**

W460

WARNING

Repairs that are made to your products by unqualified persons can result in hazards due to improper assembly or adjustments subjecting you, or the inexperienced person making such repairs, to the risk of serious injury, electrical shock, or death.

W007

WARNING

If you or an unqualified person perform service on your product, you must assume the responsibility for any personal injury or property damage which may result. The manufacturer will not be responsible for any injury or property damage arising from improper service and/or service procedures.

W008

Always contact your dealer, distributor, service agent or the manufacturer about any problems or conditions you do not understand.

Important Safety Instructions

WARNING

To reduce the risk of fire, electric shock, serious injury or death to persons when using your washer, follow these basic precautions:

W023

1. Read all instructions before using the washer-extractor.
2. Refer to the GROUNDING INSTRUCTIONS in the INSTALLATION manual (supplied with your washer-extractor) for the proper grounding of the washer-extractor.
3. Do not wash textiles that have been previously cleaned in, washed in, soaked in or spotted with gasoline, dry-cleaning solvents or other flammable or explosive substances. They give off vapors that could ignite or explode.
4. Do not add gasoline, dry-cleaning solvents or other flammable or explosive substances to the wash water. These substances give off vapors that could ignite or explode.
5. Under certain conditions, hydrogen gas may be produced in a hot water system that has not been used for two weeks or more. HYDROGEN GAS IS EXPLOSIVE. If the hot water system has not been used for such a period, before using a washer-extractor, turn on all hot water faucets and let the water flow from each for several minutes. This will release any accumulated hydrogen gas. The gas is flammable. Do not smoke or use an open flame during this time.

6. Do not allow children to play on or in a washer-extractor. Close supervision of children is necessary when the washer-extractor is used near children.
7. Before the washer-extractor is removed from service or discarded, remove the door to the washing compartment.
8. Do not reach into the washer-extractor if the wash basket is moving.
9. Do not install or store the washer-extractor where it will be exposed to water and/or weather.
10. Do not tamper with the washer-extractor's controls.
11. Do not repair or replace any part of the washer-extractor or attempt any servicing unless specifically recommended in the user-maintenance instructions or in published user-repair instructions that the user understands and has the skills to carry out.
12. To reduce the risk of an electrical shock or fire, DO NOT use an extension cord or an adapter to connect the washer-extractor to an electrical power source.
13. Use the washer-extractor only for its intended purpose, washing clothes.
14. ALWAYS disconnect the washer-extractor from its electrical supply before attempting any service.
15. Install the washer-extractor according to the INSTALLATION INSTRUCTIONS. All connections for water, drain, electrical power and grounding must comply with local codes and, when required, be made by licensed personnel.
16. To reduce the risk of fire, textiles which have traces of any flammable substances such as vegetable oil, cooking oil, machine oil, flammable chemicals, thinner, etc. or anything containing wax or chemicals such as in mops or cleaning cloths, must not be put into the washer-extractor. These flammable substances may cause the fabric to ignite.
17. Do not use fabric softeners or products to eliminate static unless recommended by the manufacturer of the fabric softener or product.
18. Keep the washer-extractor in good condition. Bumping or dropping the washer-extractor can damage its safety features. If this occurs, have the washer-extractor checked by a qualified service person.
19. Replace worn power cords and/or loose plugs.
20. Be sure that water connections have a shut-off valve and that fill hose connections are tight. CLOSE the shut-off valves at the end of each wash day.
21. The loading door MUST BE CLOSED any time the washer-extractor is to fill, tumble or spin. DO NOT by-pass the loading door switch and permit the washer-extractor to operate with the loading door open.
22. Always read and follow the manufacturer's instructions on packages of laundry and cleaning aids. Heed all warnings and precautions. To reduce the risk of poisoning or chemical burns, keep them out of the reach of children at all times (preferably in a locked cabinet).
23. Always follow the fabric care instructions supplied by the textile manufacturer.
24. Never operate the washer-extractor with any guards and/or panels removed.
25. DO NOT operate the washer-extractor with missing or broken parts.
26. DO NOT by-pass any safety devices.
27. Failure to install, maintain and/or operate this washer-extractor according to the manufacturer's instructions may result in conditions that can produce bodily injury and/or property damage.

NOTE: The WARNING and IMPORTANT SAFETY INSTRUCTIONS appearing in this manual are not meant to cover all possible conditions and situations that may occur. Common sense, caution and care must be exercised when installing, maintaining and operating the washer-extractor.

Any problems or conditions not understood should be reported to the dealer, distributor, service agent or the manufacturer.

Locating an Authorized Servicer

Alliance Laundry Systems is not responsible for personal injury or property damage resulting from improper service. Review all service information before beginning repairs.

Warranty service must be performed by an authorized technician, using authorized factory parts. If service is required after the warranty expires, Alliance Laundry Systems also recommends contacting an authorized technician and using authorized factory parts.

Section 2
Introduction

Customer Service

Alliance Laundry Systems is not responsible for personal injury or property damage resulting from improper service. Review all service information before beginning repairs.

If literature or replacement parts are required, contact the source from whom the machine was purchased or contact Alliance Laundry Systems at (920) 748-3950 for the name of the nearest authorized parts distributor.

For technical assistance, call (920) 748-3121.

Nameplate Location

When calling or writing about your product, be sure to mention model and serial numbers. Model and serial numbers are located on nameplate(s) as shown.

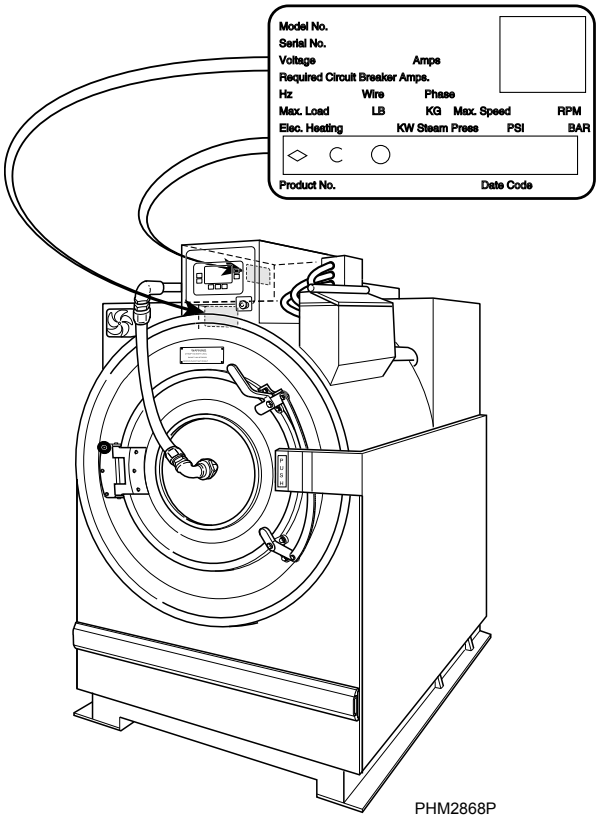

PHM2868P

Model Identification

Information in this manual is applicable to these washer-extractors.

UW35TV	UW60TV	UW80TV	UW100TV	UW125TV	UW150TV
UWL035T0L	UWL035T0M	UWL035T0V	UWL035T1L	UWL035T1M	UWL035T1V
UWL035T2L	UWL035T2M	UWL035T2V	UWL035T3L	UWL035T3M	UWL035T3V
UWL060T0L	UWL060T0M	UWL060T0V	UWL060T1L	UWL060T1M	UWL060T1V
UWL060T2L	UWL060T2M	UWL060T2V	UWL060T3L	UWL060T3M	UWL060T3V
UWL080T0V	UWL080T1V	UWL080T2V	UWL080T3V	UWL100T0V	UWL100T1V
UWL100T2V	UWL100T3V	UWL125T0V	UWL125T1V	UWL125T2V	UWL125T3V
UWL150T0V	UWL150T1V	UWL150T2V	UWL150T3V	UWN035T0L	UWN035T0M
UWN035T0V	UWN035T1L	UWN035T1M	UWN035T1V	UWN035T2L	UWN035T2M
UWN035T2V	UWN035T3L	UWN035T3M	UWN035T3V	UWN060T0L	UWN060T0M
UWN060T0V	UWN060T1L	UWN060T1M	UWN060T1V	UWN060T2L	UWN060T2M
UWN060T2V	UWN060T3L	UWN060T3M	UWN060T3V	UWN080T0V	UWN080T1V
UWN080T2V	UWN080T3V	UWN100T0V	UWN100T1V	UWN100T2V	UWN100T3V
UWN125T0V	UWN125T1V	UWN125T2V	UWN125T3V	UWN150T0V	UWN150T1V
UWN150T2V	UWN150T3V	UWU035T0L	UWU035T0M	UWU035T0V	UWU035T1L
UWU035T1M	UWU035T1V	UWU035T2L	UWU035T2M	UWU035T2V	UWU035T3L
UWU035T3M	UWU035T3V	UWU060T0L	UWU060T0M	UWU060T0V	UWU060T1L
UWU060T1M	UWU060T1V	UWU060T2L	UWU060T2M	UWU060T2V	UWU060T3L
UWU060T3M	UWU060T3V	UWU080T0V	UWU080T1V	UWU080T2V	UWU080T3V
UWU100T0V	UWU100T1V	UWU100T2V	UWU100T3V	UWU125T0V	UWU125T1V
UWU125T2V	UWU125T3V	UWU150T0V	UWU150T1V	UWU150T2V	UWU150T3V

Section 3
UW Theory of Operation

Starting the Machine

The door lock will not allow a cycle to be started until the door has been closed.

Fill

The operator selects a cycle and starts the machine. Water enters the machine through water valves that are controlled by the microcomputer. As water fills the basket, a column of air is trapped in a pressure bulb and hose. The air pressure continues to increase as the basket fills with water. When the desired water level is reached, the water level switch triggers the microcomputer and the water valves turn off.

A vacuum breaker installed in the inlet plumbing or a shell overflow and air gap prevents the backflow of water.

Supply

The operator can either connect external liquid supplies to the machine or fill the supply dispenser with liquid or dry supplies. The supply dispenser's nozzles flush the compartments with water at the appropriate times throughout a cycle.

Wash

The basket includes ribs that lift the laundry from the wash water. The laundry then tumbles back into the bath.

1 dual-speed motor drives the basket's shaft with a V-belt.

UW35, UW60, UW80, UW100 and UW125 models use 2 flange-type bearing that are bolted to the frame. UW150 models use 2 bearings that are held in place by a single cast-iron trunnion that is bolted to the frame.

Spray-Rinse

The spray-rinse consists of a hose connected from the hot and cold water inlet spray valves to the center of the door glass. A nozzle on the inside of the door glass produces a fan-shaped spray that disperses water throughout the load.

Drain

UW washer-extractors use a normally-open gravity-type drain system. No pump is used. When the drain valve opens, the perforated basket allows water to drain from it.

In the event of a power failure, the drain valve will open automatically and the machine will drain.

UW 35 and 60 washer-extractors include a single drain valve. UW 80, 100, 125 and 150 models include 2 drain valves. On dual drain models, the 2 drain valves open and close together.

Extract

A final high-speed extract step removes water from the load, which maximizes drying efficiency.

The door lock system will not allow the door to be opened until the cycle has finished.

Section 4
Troubleshooting

WARNING

To reduce the risk of electrical shock, fire, explosion, serious injury or death:
- **Disconnect electrical power to the washer-extractor before servicing it.**
- **Close the gas shut-off valve to the washer-extractor (when applicable) before servicing it.**
- **Never start the washer-extractor with any guards/panels removed.**
- **Whenever ground wires are removed during servicing, these ground wires must be reconnected to ensure that the washer-extractor is properly grounded.**

W461R1

1. NO VISIBLE DISPLAY

POSSIBLE CAUSE	TO CORRECT
Incorrect settings for the LCD screen.	Check the Contrast/Backlight Menu for correct LCD display settings. To access the Contrast/Backlight Menu, from the Cycle or Run Menu, press the LCD key. Press the left or right arrow button to highlight either Contrast or Backlight. Once either the Contrast or Backlight option is highlighted, press the up or down button to change the option's value. The Contrast can be adjusted to 22 possible levels. The Backlight can be turned on or off and has a factory default value of on. To exit the Contrast/Backlight Menu, press the BACK button. Refer to *Figure 1*. **NOTE: If the Contrast/Backlight Menu is accessed from the Run Menu and the Stop key is pressed, if a cycle is in process, it will be aborted.**
Emergency stop switch error.	Make sure the emergency stop switch is pulled out. Check the switch for voltage (24 VDC) or for loose connections. Repair/replace the switch as needed.
The F1 and F2 fuses on the AP1 output board (fuse board) are blown.	Check for blown fuses. Replace the fuses as needed.
Bad output from transformer.	Check the transformer plug to make sure it is connected properly. Check to make sure proper voltage (220 Volts) is going into and coming out of the transformer. Make sure the correct voltage connector is plugged into the transformer's 208 or 240 connector (depending on the machine's voltage requirements).
Error between the H1 plug on the AP2 control board (display) to the H3 plug on the AP1 output board (fuse board).	Check the AP1 output board (fuse board) for voltage between H3-18 (common) and H3-3 (VUR, 33 VDC) and between H3-4 for (24 VDC).

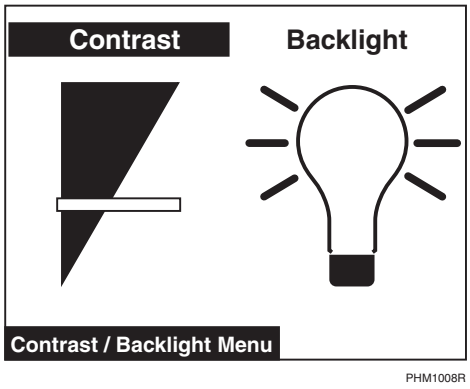

Figure 1

2. NO FILL ANALYSIS

POSSIBLE CAUSE	TO CORRECT
The water supply is closed.	Make sure the water supply is turned on.
The F3 fuse on the AP1 output board is blown.	Replace the blown fuse. Refer to *point B* on the *No Fill Analysis wiring diagram*.
Loose wires or connections from the 15-pin molex plug in the back of the control module box to the water inlet valves.	Secure any loose wires or connections. Refer to *point C* on the *No Fill Analysis wiring diagram*.
Improper grounding of the water inlet valves.	Make sure the water inlet valves' ground wires are connected. Refer to *point D* on the *No Fill Analysis wiring diagram*.

Please refer to the following 2 pages for wiring diagram information.

No Fill Analysis (Sheet 1 of 2)

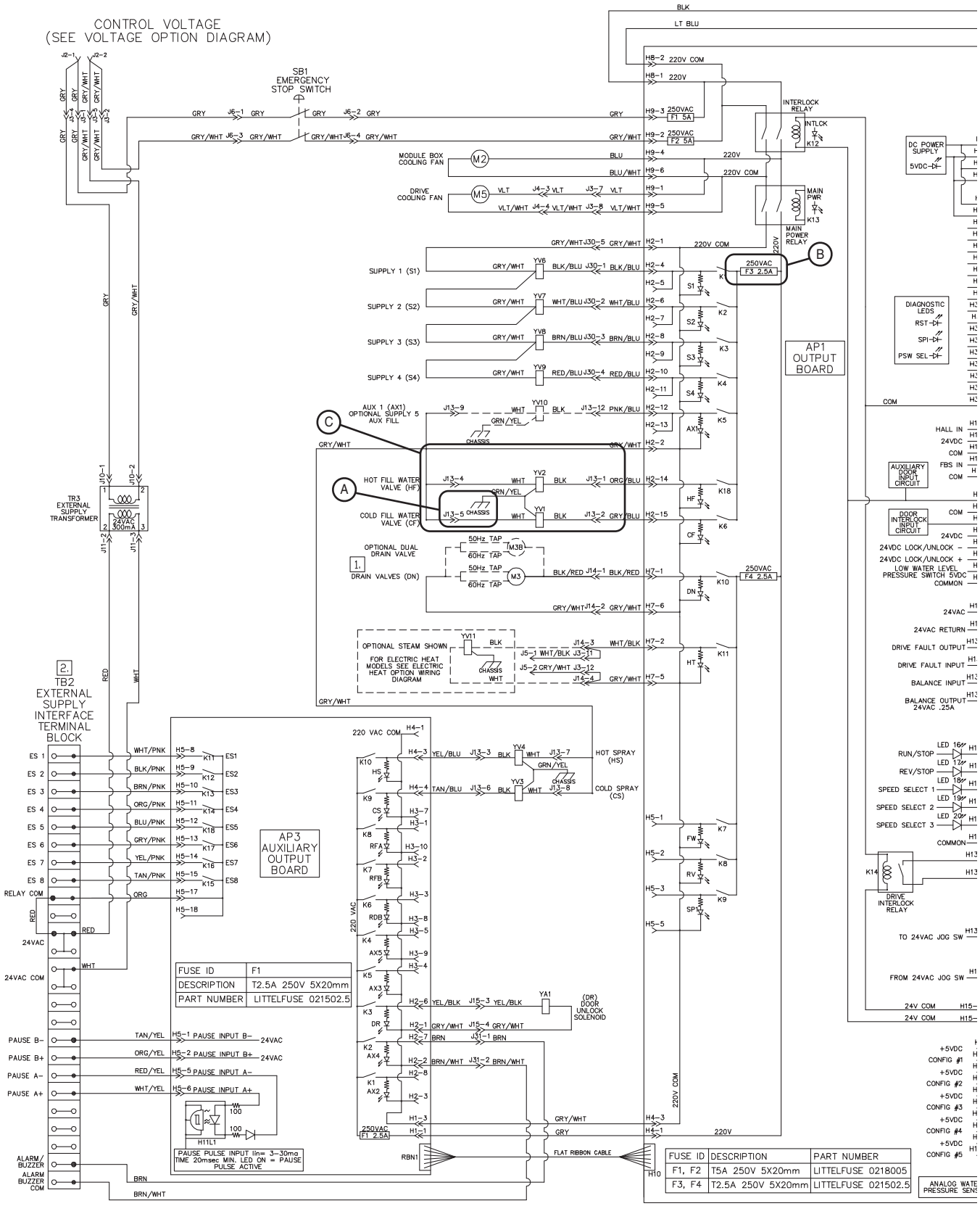

No Fill Analysis (Sheet 2 of 2)

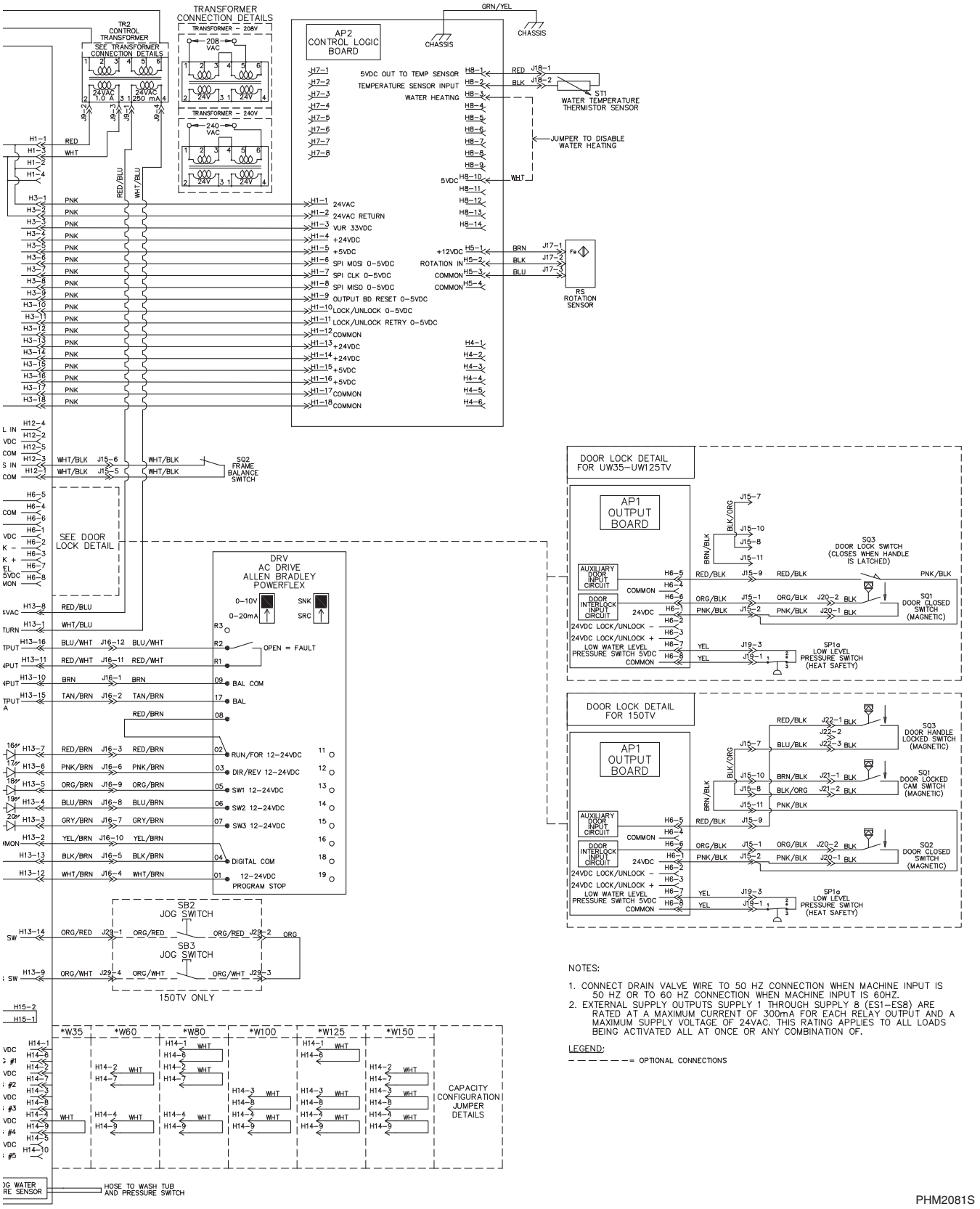

3. NO COLD OR HOT SPRAY-RINSE

POSSIBLE CAUSE	TO CORRECT
The water supply is closed.	Make sure the water supply is open.
The F1 fuse on the AP3 auxiliary output board is blown.	Replace the blown fuse. This fuse controls all spray-rinse controls and external supply signals. Refer to *point B* on the *No Cold or Hot Spray-Rinse wiring diagram*.
The F4 fuse on the AP1 output board is blown.	Replace the blown fuse. Refer to *point F* on the *No Cold or Hot Spray-Rinse wiring diagram*.
Loose wires or connections from the H4 connection on the AP3 auxiliary output board to the 15-pin molex plug in the back of the control module box.	Secure any loose wires or connections between the H4 connector and the 15-pin molex plug. Refer to *point C* on the *No Cold or Hot Spray-Rinse wiring diagram*.
Loose wires or connections from the H1 plug on the AP3 auxiliary output board to the H4 plug on the AP1 output board (fuse board).	Check the harness for loose wires or connections and for continuity. Repair or replace the harness as needed. Refer to *point E* on the *No Cold or Hot Spray-Rinse wiring diagram*.
The valve's solenoid is not functioning.	Verify that when cold or hot spray is called for, the corresponding LED on the AP3 board is lit. Verify that voltage is present at the solenoid. Replace non-functioning solenoids as needed. Refer to *point D* on the *No Cold or Hot Spray-Rinse wiring diagram*.
NOTE: Look for any grounding issues such as pinched inlet valve wires (i.e., HS or CS signal lines from the output board to the hot or cold water valve solenoids).	

Please refer to the following two pages for wiring diagram information.

No Cold or Hot Spray-Rinse (Sheet 1 of 2)

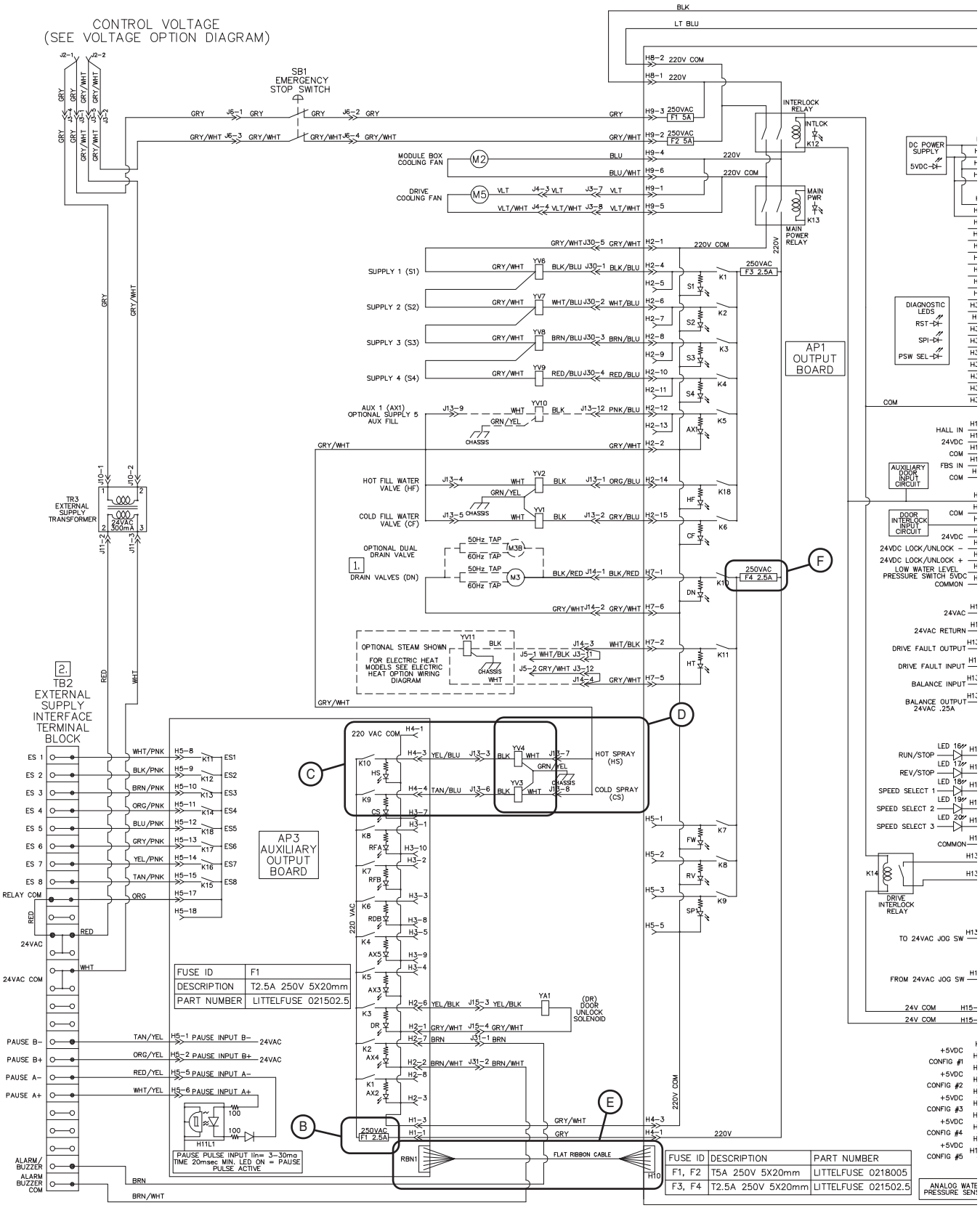

No Cold or Hot Spray-Rinse (Sheet 2 of 2)

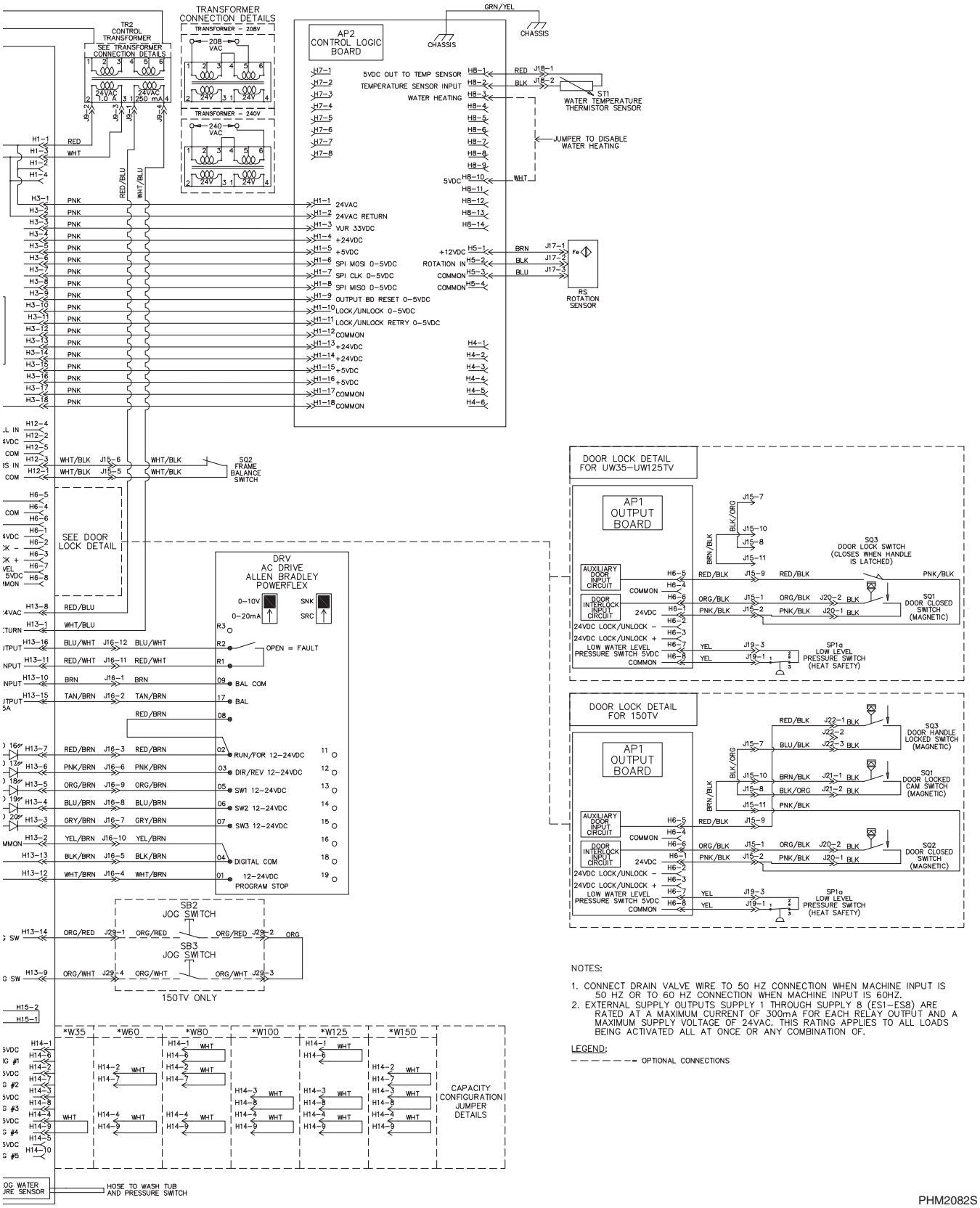

4. DOOR ERRORS (Close Door/Lock Door)

POSSIBLE CAUSE	TO CORRECT
The door handle is not connecting to the door locked switch.	Make sure the door handle has been pulled down to the latched position. Refer to *point A* on the *Door Errors (Closed Door/Lock Door) wiring diagram*.
The door magnet is not being detected by the door closed magnetic switch (read switch) when the door is closed.	Make sure the door magnet is in position. Replace the magnet or re-position the magnet or door closed magnetic switch as needed.
The F1 or F2 fuse on the AP1 output board (fuse board) or the F1 fuse on the AP3 auxiliary output board is blown.	Replace the blown fuse. Refer to *point D* on the *Door Errors (Closed Door/Lock Door) wiring diagram*.
Ribbon cable RBN1 is loose or damaged.	Inspect ribbon cable RBN1, which goes from the AP3 auxiliary output board to H10 on the API output board. Refer to *point G* on the *Door Errors (Closed Door/Lock Door) wiring diagram*.
Loose wires or connections on the H2 plug on the AP3 auxiliary output board.	Make sure the wiring into pin 6 on the H2 plug has a secure connection. Check for voltage from the H2 plug to the solenoid. Repair or replace the wiring as needed. Refer to *point E* on the *Door Errors (Closed Door/Lock Door) wiring diagram*.
Loose wires or connections from the H1 plug on the AP3 auxiliary output board to the H4 plug of the AP1 output board.	Make sure the wiring from the H1 plug to the H4 plug is secure. Check for voltage from the H1 plug to the H4 plug (220VAC). Repair or replace the wiring as needed. Refer to *point F* on the *Door Errors (Closed Door/Lock Door) wiring diagram*.
Some wires are grounded.	Check for pinched or cut wires in the door box. Repair or replace the wires as needed.
The door will not unlock.	Check for loose connections on the door lock solenoid. Test the solenoid for voltage (220VAC when energized). Replace the solenoid as needed.

Please refer to the following two pages for wiring diagram information.

Door Errors (Close Door/Lock Door) (Sheet 1 of 2)

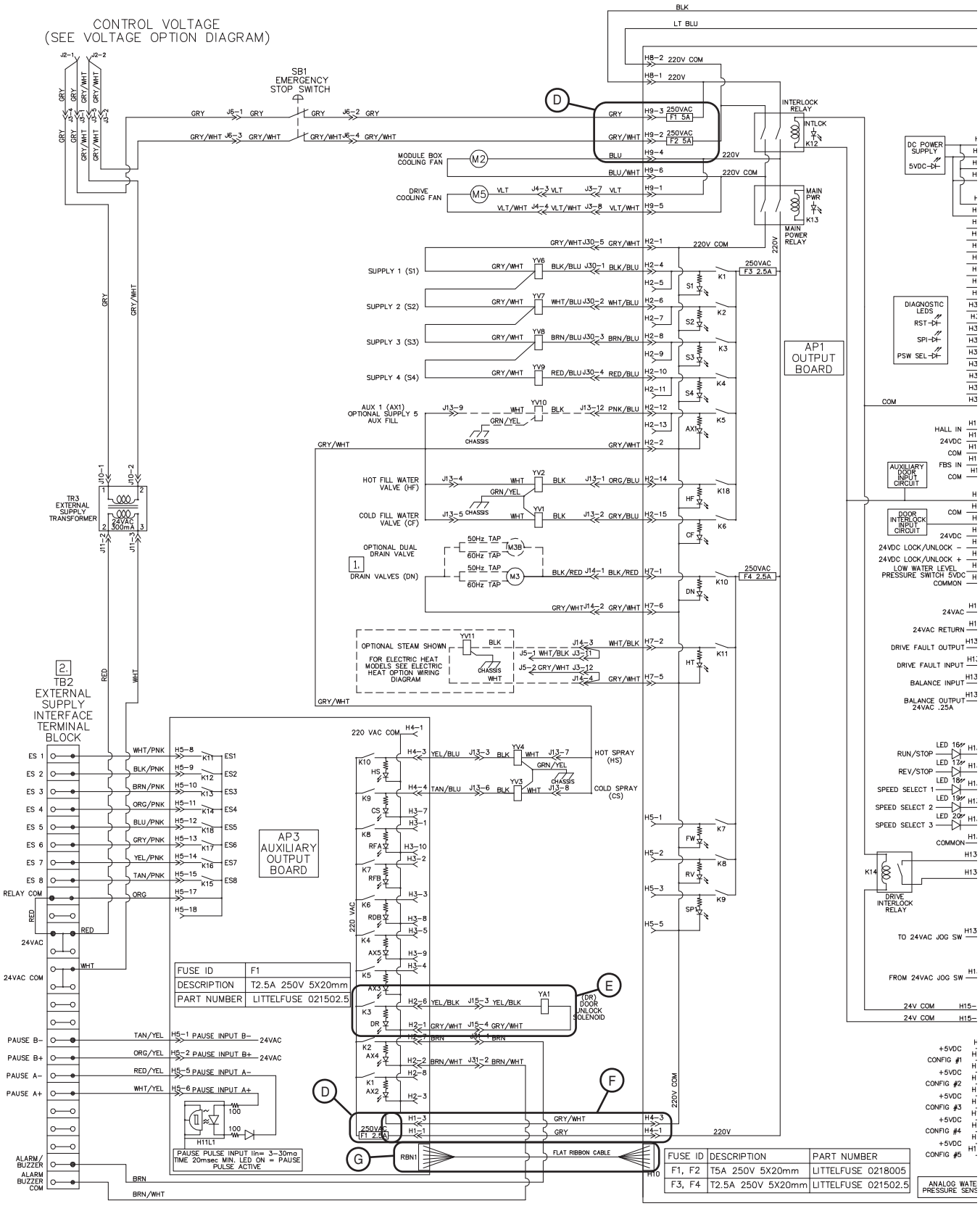

FUSE ID	F1
DESCRIPTION	T2.5A 250V 5X20mm
PART NUMBER	LITTELFUSE 021502.5

FUSE ID	DESCRIPTION	PART NUMBER
F1, F2	T5A 250V 5X20mm	LITTELFUSE 0218005
F3, F4	T2.5A 250V 5X20mm	LITTELFUSE 021502.5

Door Errors (Close Door/Lock Door) (Sheet 2 of 2)

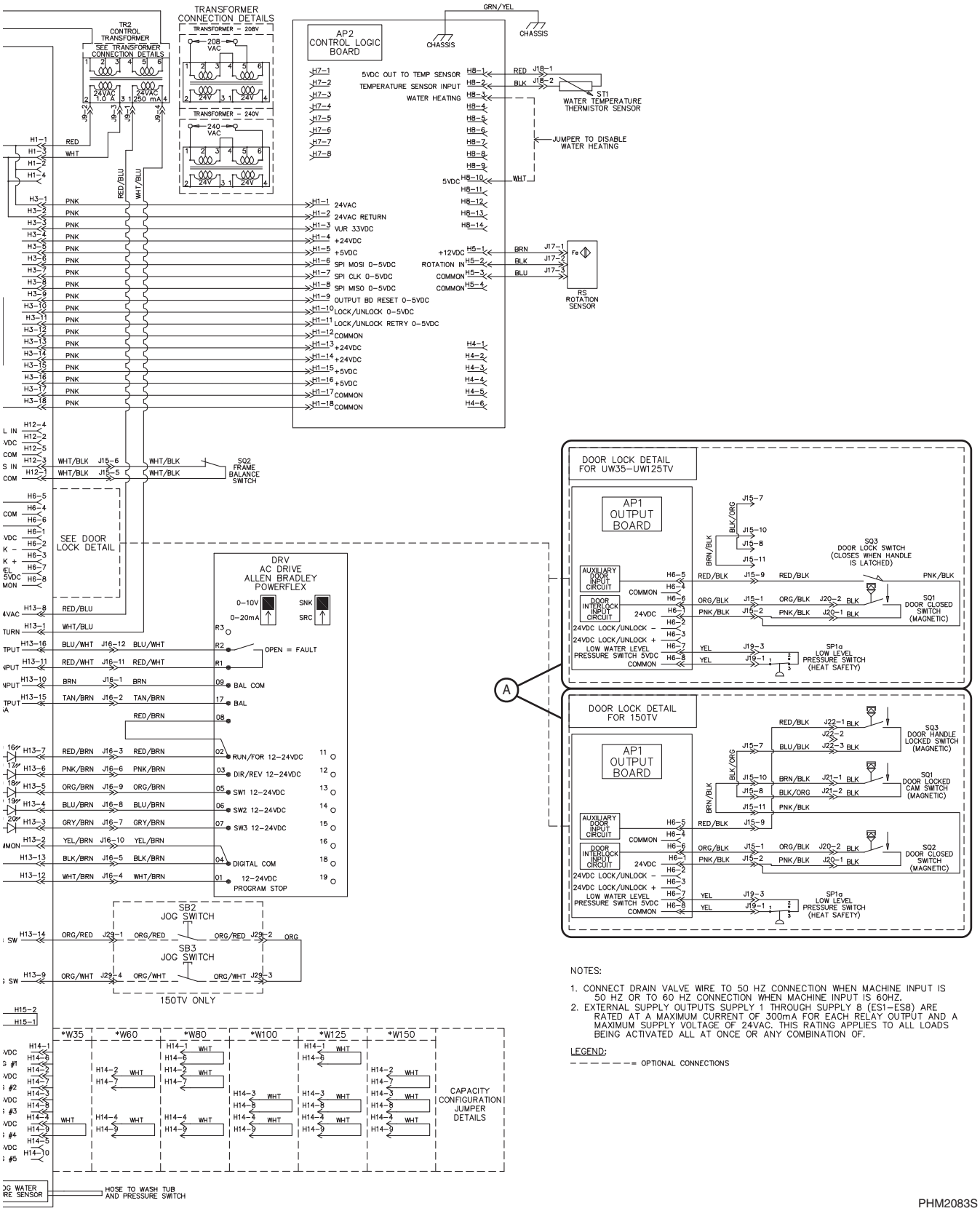

5. NO AP1 OUTPUT BOARD FUNCTIONS

NOTE: Make sure the emergency stop pushbutton is pulled out.

POSSIBLE CAUSE	TO CORRECT
The AP1 output board is not receiving 240VAC.	Check to see if the 240VAC is shorting or grounding out to the cabinet. Check for pinched, crimped or frayed wires.
There is loose connection on the H9 input power plug on the AP1 output board.	Make sure the wiring harness is completely fitted into the H9 input power plug on the AP1 output board. The incoming voltage should be 240VAC. Refer to *point B* on the *No AP1 Output Board Functions wiring diagram*.
There is a loose connection on the H8 transformer plug on H8 on the AP1 output board.	Make sure the wiring harness is completely fitted into the H8 transformer plug on the AP1 output board. Verify that voltage (220-240 VAC) is present across H8-1 and H8-2 on the AP1 output board. This is the input voltage for transformer TR2. The output voltage for transformer TR2 should be 24VAC. This voltage can be verified by measuring across H1-1 and H1-3 or H13-1 and H13-8 on the AP1 output board.
The incorrect transformer voltage jumper is in place on the AP1 output board.	Make sure the correct jumper is in place. The 240V jumper is used for 220-240V models. The 208V jumper is used for 200-208V, 380-415V and 400-480V models.
The F1 or F2 fuse on the AP1 output board is blown.	Replace the blown fuse. Refer to *point E* on the *No AP1 Output Board Functions wiring diagram*.
There is no power to the K12 interlock relay or the K13 main power relay.	Check to see if LED23 by the K12 interlock relay is on. Check to see if LED22 by K13 main power relay is on. If either of the lights is not on, replace the AP1 output board. Refer to *point F* on the *No AP1 Output Board Functions wiring diagram*. **NOTE: The door must be closed for LED 22 and 23 to be on.**
There is a loose connection between the H1 plug on the AP1 output board and the transformer.	Make sure the wiring harness is completely fitted into the H1 plug. The incoming voltage should be 24VAC. Refer to *point G* on the *No AP1 Output Board Functions wiring diagram*.

Please refer to the following two pages for wiring diagram information.

No API Output Board Functions (Sheet 1 of 2)

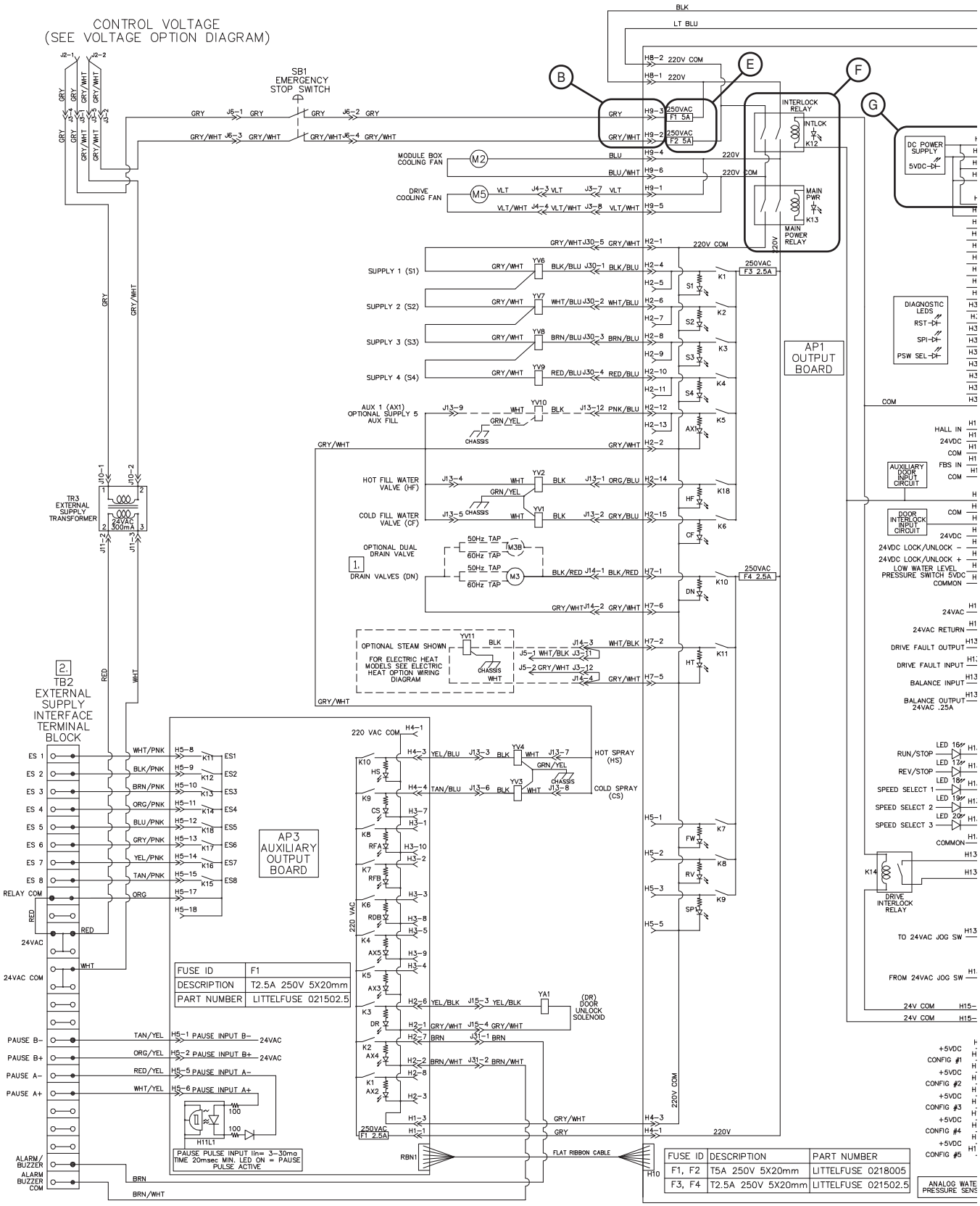

No API Output Board Functions (Sheet 2 of 2)

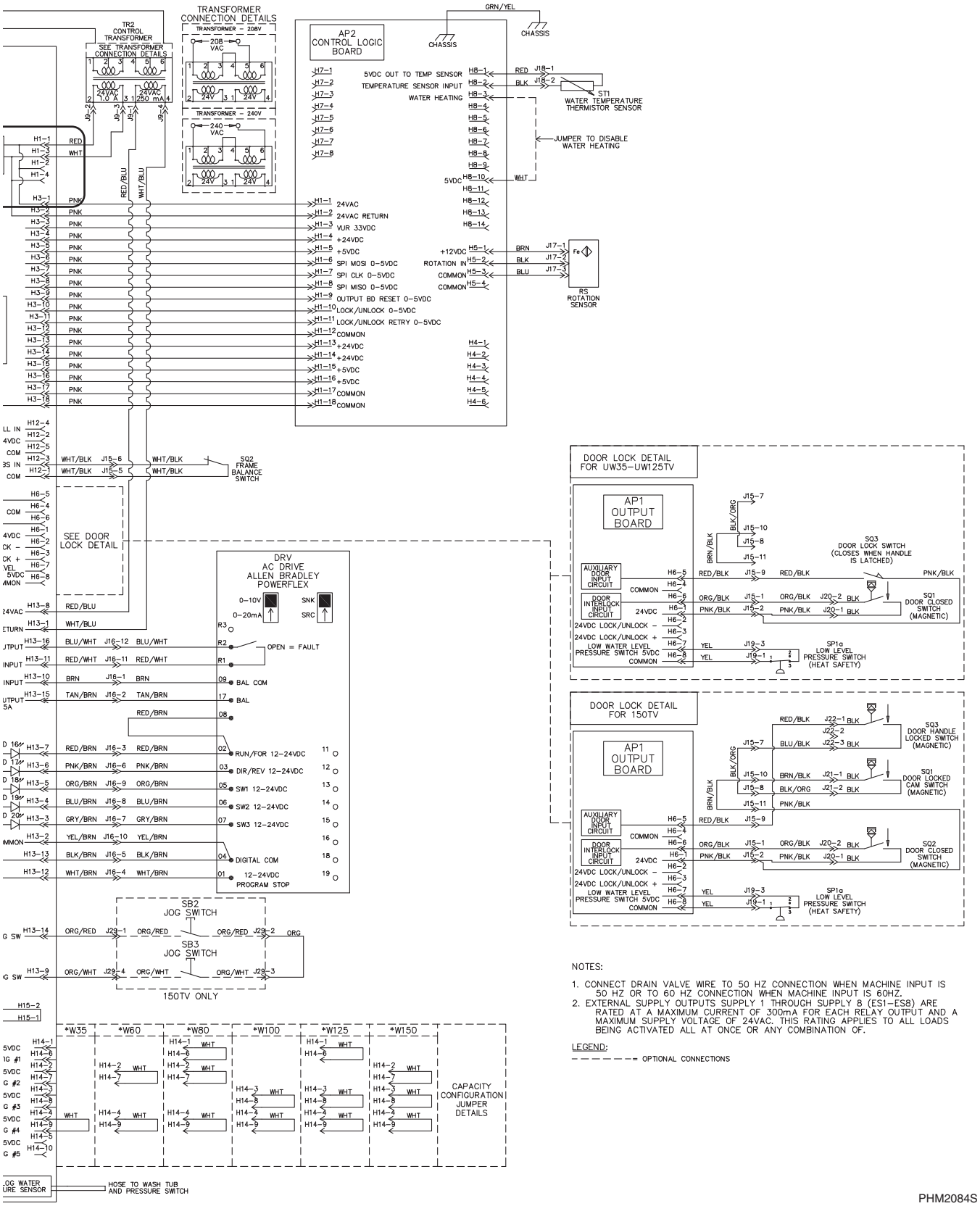

UniLinc Outputs, Inputs Abbreviations

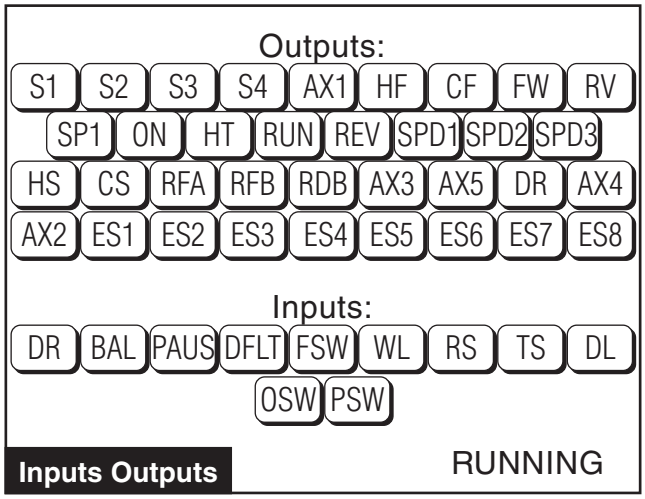

PHM1059R

OUTPUTS

S1	Supply 1
S2	Supply 2
S3	Supply 3
S4	Supply 4/5
AX1	Auxiliary 1 (Supply 5 or Aux Fill)
HF	Hot Fill
CF	Cold Fill
FW	Forward Contactor
RV	Reverse Contactor
SP1	Extract Contactor
DN	Drain
HT	Heat
RUN	VFD Forward
REV	VFD Reverse
SPD1	VFD Speed Select 1
SPD2	VFD Speed Select 2
SPD3	VFD Speed Select 3
HS	Hot Spray

CS	Cold Spray
RFA	Reuse Fill A
RFB	Reuse Fill B
RDB	Reuse Drain B
AX3	Auxiliary 3 (Recirc. or Reuse Drain A)
AX5	Auxiliary 5 (Reuse Wash Tub Drain)
DR	Door Unlock
AX4	Auxiliary 4 (External Buzzer/Signal)
AX2	Auxiliary 2 (Unused)
ES1	External Supply 1
ES2	External Supply 2
ES3	External Supply 3
ES4	External Supply 4
ES5	External Supply 5
ES6	External Supply 6
ES7	External Supply 7
ES8	External Supply 8

INPUTS

DR	DR – Door
BAL	VFD Balance
PAUS	External Dispenser Pause
DFLT	Drive Fault
FSW	Frame Switch
WL	Water Level Satisfied

RS	RS – Rotation Present
TS	Temperature Satisfied
DL	Door Lock
OSW	Optional Switch (Jog on 150#)
PSW	Low Level Pressure Switch

6. NO MOTOR ROTATION (with no active drive fault)

POSSIBLE CAUSE	TO CORRECT
Wrong parameters are loaded into the drive.	Verify that the parameters loaded into the drive are correct. Refer to the drive's programming decal.
The drive's SNK/SRC switch not in the correct position.	Make sure the switch is in the SNK position.
Loose wire or bad connection on the drive control's terminal strip.	Make sure all terminal strip wiring connections are secure.
The voltage from the drive's DC+ and DC- terminals is incorrect. The voltage should be close to the machine's input voltage multiplied by 1.414.	Check the power connections, main fuses and circuit breaker.

7. NO MOTOR ROTATION (with active drive fault)

NOTE: If the control detects the VFD Fault Switch input as open, the AP2 control will log a Drive Fault error and increment the Drive Fault Errors audit counter. The control saves the error type, cycle, segment and step in which it happened, and the date and the time of the error to a queue holding the last eight (8) machine errors. The machine cycle continues normally. The drive retains its last three (3) errors and can be viewed from the drive display without the aid of a handheld device.

NOTE: Refer to the AC Drive Supplement Manual F232120 for control terminal voltage levels and parameter values.

POSSIBLE CAUSE	TO CORRECT
Drive fault 6, 7, 8, 12, 63 or 64.	Verify that the parameters loaded into the drive are correct. Refer to the drive's programming decal. Verify that the drive is wired correctly. Verify that the drive box's fans are working and that the fans' filters are in place and clean.
Drive fault 4. The voltage from the drive's DC+ and DC- terminals is incorrect. The voltage should be close to the machine's input voltage multiplied by 1.414.	Measure the voltage between the drive's DC+ and DC- terminals. If the voltage is under 260VDC, the drive's input voltage is too low (less than 185VAC) or the drive is malfunctioning.
Drive fault 13, 38, 39, 40 or 41.p	Remove the motor wiring from the drive. Re-connect the wiring. Start the machine to see if the drive fault re-appears. **NOTE: If you have no immediate fault the motor wires' insulation, splice connectors' insulation, or motor windings' insulation have been damaged. Check with Ohm meter.**
Drive fault 5. The voltage from the drive's DC+ and DC- terminals is incorrect. The voltage should be close to the machine's input voltage multiplied by 1.414.	Measure the voltage between the drive's DC+ and DC- terminals. If the voltage is under 340VDC, either a stinger leg exists or the drive's input voltage is too high (over 240VAC). **NOTE: If drive fault 5 occurs only while the machine is accelerating to the extract speed, the motor windings may be deteriorating.**

(Continued)

(Continued)

POSSIBLE CAUSE	TO CORRECT
The motor will not rotate because it is locked up from being overheated.	Remove the belt from the motor. Replace the belt. Start the machine to see if the motor rotates. Replace the motor if it still does not rotate.

8. DOOR CANNOT BE UNLOCKED/NO CYCLE FUNCTION

The AP2 Control Display Board will prevent the door from being unlocked or the cycle from being started until it determines that there is no rotation or that the coast time has expired. If the rotation sensor is not working properly to detect when the rotation has stopped, the machine will continue using coast times.

Rotation Sensor Troubleshooting

a. Check the Inputs Outputs Menu to see if the rotation sensor is working. The input RS should highlight when rotation is detected.
b. Make sure the harness is plugged into the H5 header on the AP2 Control Display Board.
c. Check the rotation sensor's gap setting. Refer to the machine's Installation manual for gap setting information.
d. Repeat step a.
e. Replace the rotation sensor as needed.

NOTE: If any attempt is made to start a cycle or unlock the door while a coast time countdown is in process, the "Please Wait" hourglass will be displayed. Wait for the hourglass to disappear. Once the hourglass disappears and the control returns to the Cycle Menu, use the emergency stop switch to cycle power to the machine. Once power is restored, the machine will begin using the rotation sensor again instead of coast times.

9. HEATING MALFUNCTION

POSSIBLE CAUSE	TO CORRECT
Check H7 on the AP1 Output Board for a loose connection.	Secure or replace any loose wires. Refer to *point A* on the *Heating Malfunction wiring diagram*.
The single level safety switch is not being activated.	Check for voltage at the switch for proper output. When there is at least the lowest programmable water level present, the normally-closed single-level safety switch will open. To verify the switch is open, 5VDC should be present across the switch leads. When the switch is closed, 0VDC should be present across the switch leads. Refer to *point B* on the *Heating Malfunction wiring diagram*.
The AP2 Control Display Board's heater jumper is in place.	Remove the jumper from H8 of the AP2 Control display Board, which connects H8-3 to H8-10. Refer to *point C* on the *Heating Malfunction wiring diagram*.
Contactor (KM8) is not being activated to engage the contact for heat.	Check for correct voltage (120 or 220 Volts, depending on the machine's voltage requirements) going into and out of the contactor. Replace the contactor as needed. Refer to *point D* on the *Heating Malfunction wiring diagram*.
NOTE: Check the continuity from the contactors to the heating elements or watch the KM8 contactor's state change on the Inputs and Outputs Menu while the machine is filling. **NOTE: When the heater is on, the HT LED on output board AP1 should be lit and HT on the Inputs Outputs Menu should be highlighted.**	

Heating Malfunction (Sheet 1 of 3)

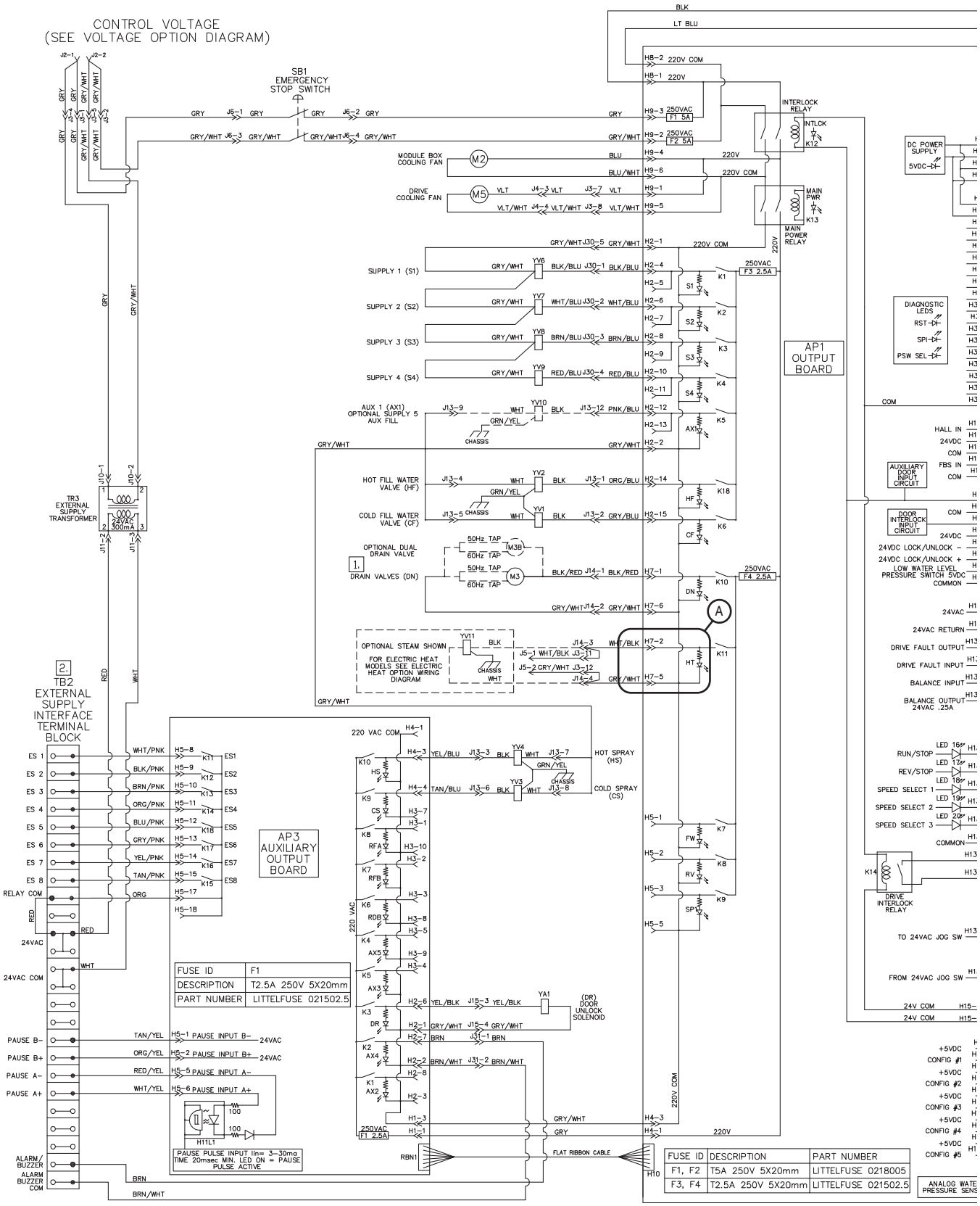

Heating Malfunction (Sheet 2 of 3)

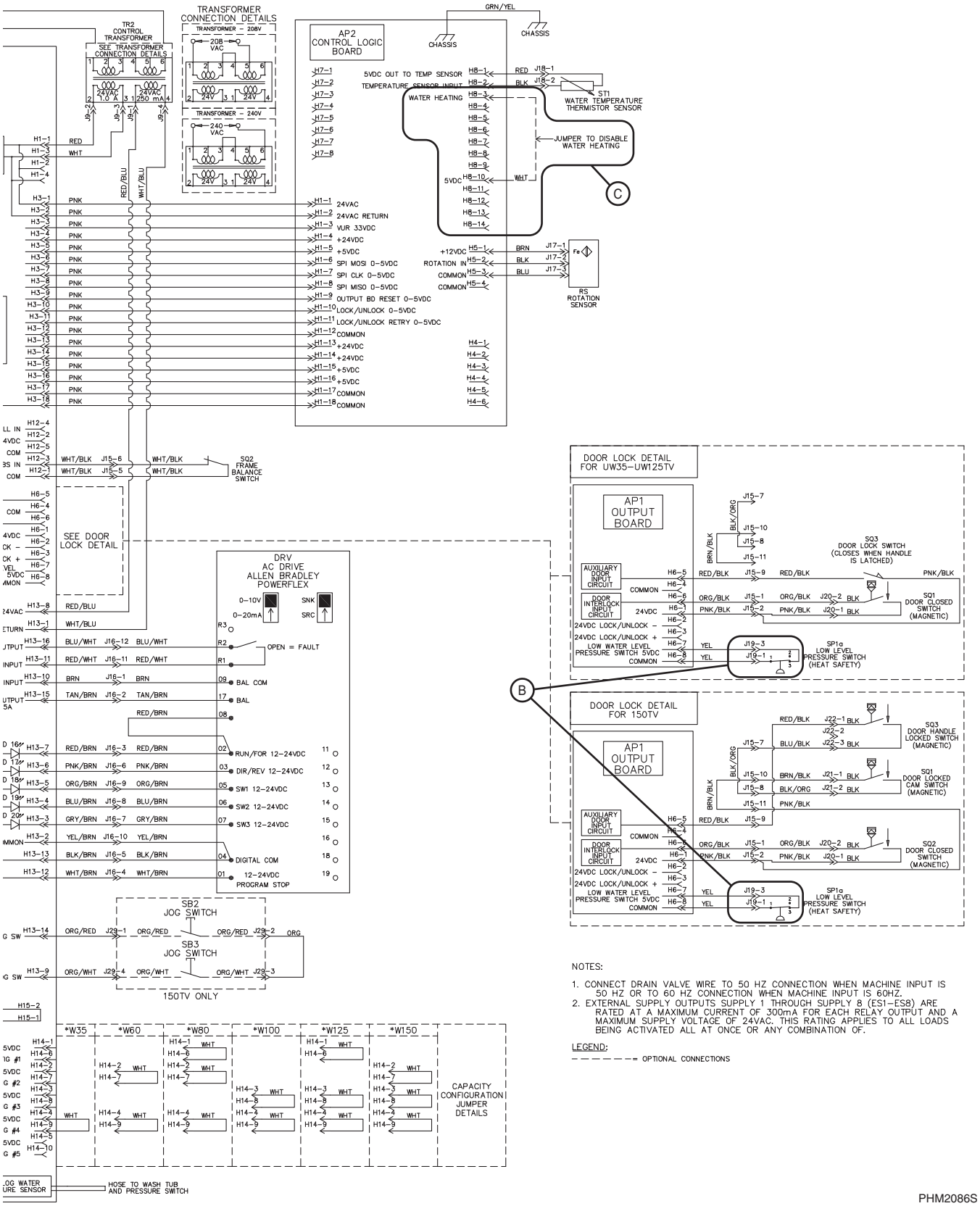

Heating Malfunction (Sheet 3 of 3)

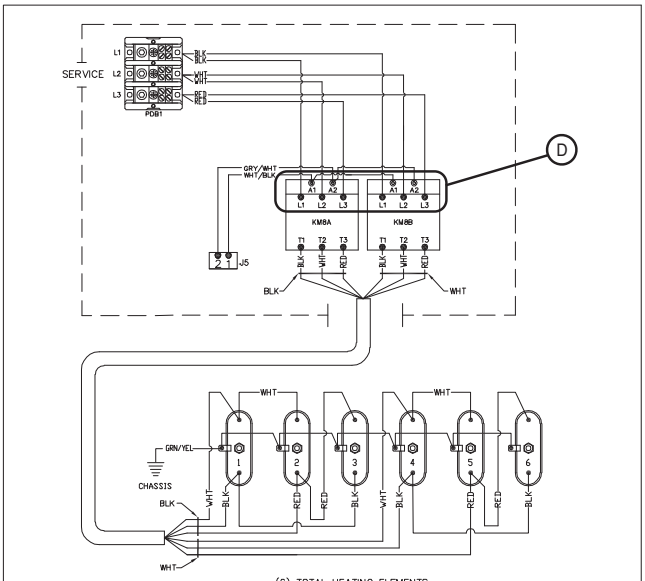

MODELS:		VOLTAGE CODE AND DESCRIPTION:
W35 W60	Q	200–208/220–240V/50/60Hz/3PH

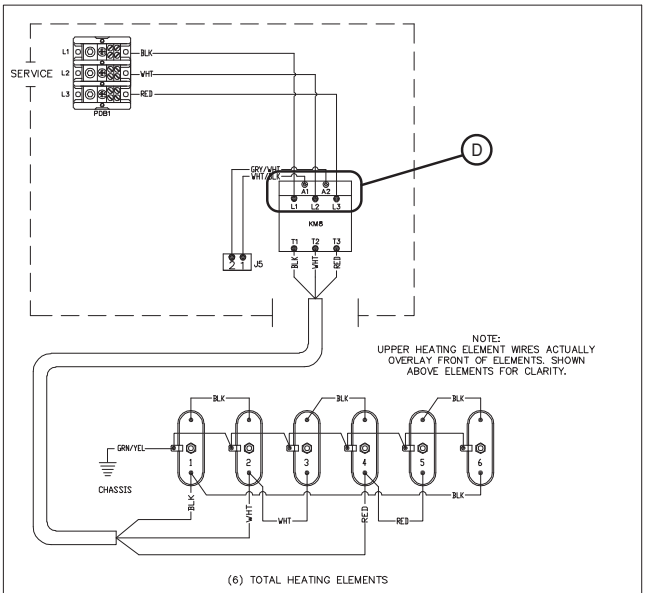

MODELS:		VOLTAGE CODE AND DESCRIPTION:
W35 W60	R	380–415/440–480V/50/60Hz/3PH

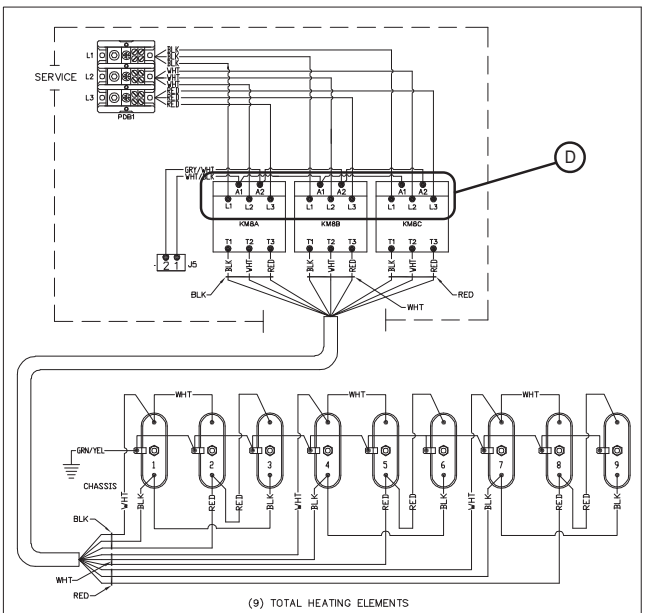

MODELS:		VOLTAGE CODE AND DESCRIPTION:
W80 W100	Q	200–208/220–240V/50/60Hz/3PH

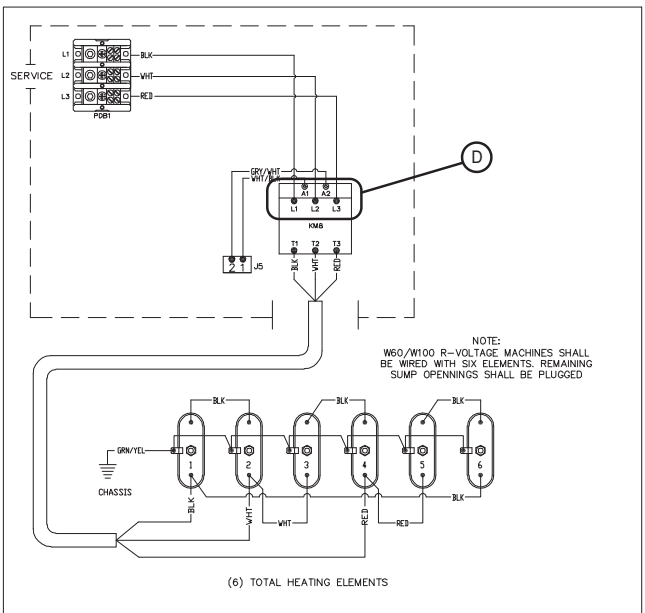

MODELS:		VOLTAGE CODE AND DESCRIPTION:
W80 W100	R	380–415/440–480V/50/60Hz/3PH

PHM2087S

10. ALARM ANALYSIS

POSSIBLE CAUSE	TO CORRECT
Close door, lock door, fill, or frame balance error.	From the System Menu, select Diagnostic. From the Diagnostic Menu, select Alarms. To diagnose the error, review list of faults that occurred recently. To correct the fault, refer to the other troubleshooting sections. Refer to the machine's Programming manual for a complete list of errors and their definitions.

11. TEMPERATURE FAULTING

POSSIBLE CAUSE	TO CORRECT
Check for disconnected or loose wiring between H8-1 and H8-2 on the AP2 Control Board and the J18 connection on the sump, which is located at the bottom of the shell. With the temperature probe disconnected, the voltage across H8-1 and H8-2 should be 5VDC.	Re-connect any loose wiring. Refer to *point A* on the *Temperature Faulting wiring diagram.* If the control does not display a temperature but shows hot or cold, check the H8 connection's red and black wire on the AP2 Control Board to make sure the wires are secure and that the correct voltage is present. Refer to *point C* on the *Temperature Faulting wiring diagram*.
The ST1 thermistor is not functioning.	Check for voltage between the AP2 Board and thermistor. If 5VDC are present, check the termistor for corrosion. Clean or replace the thermistor as needed.

Temperature Faulting (Sheet 1 of 2)

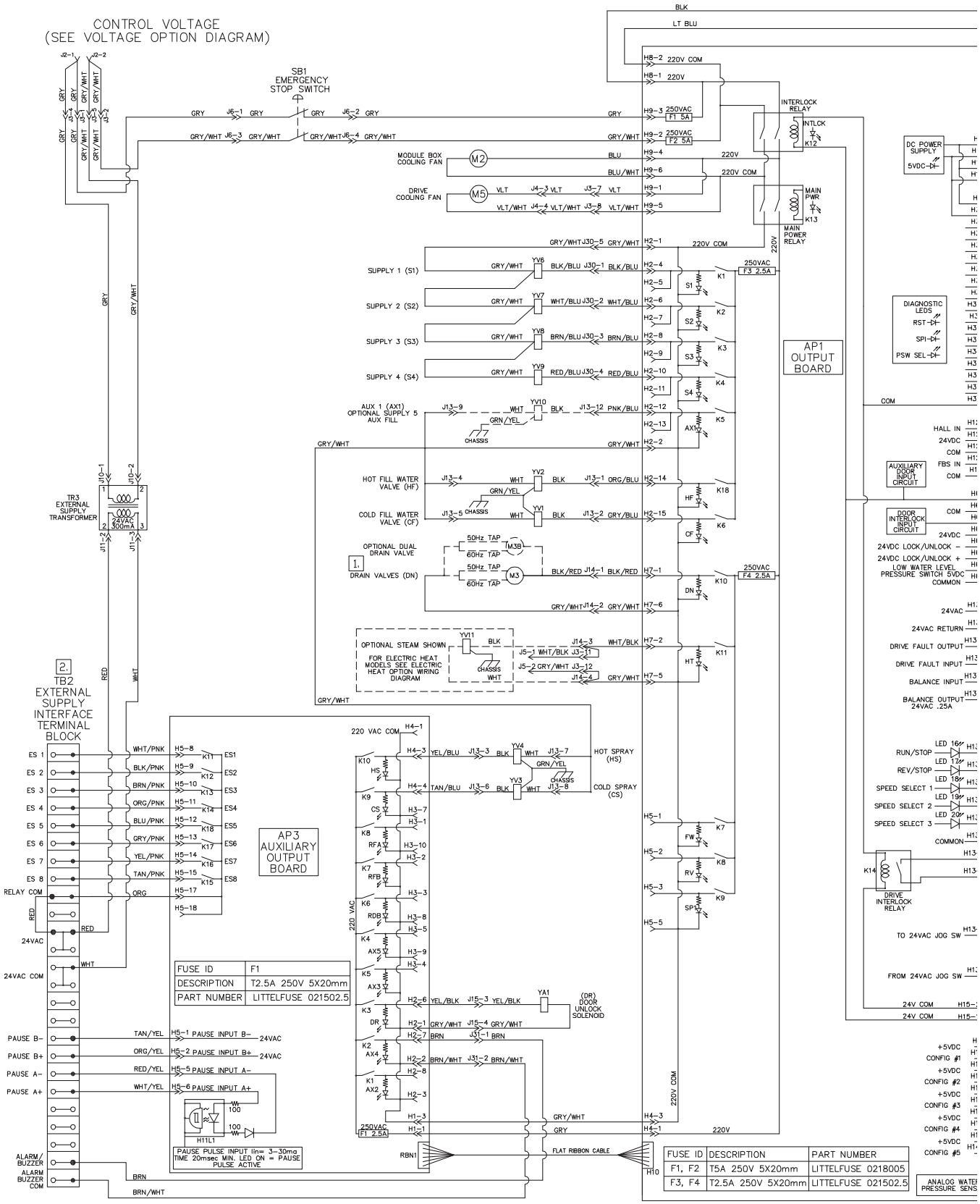

Temperature Faulting (Sheet 2 of 2)

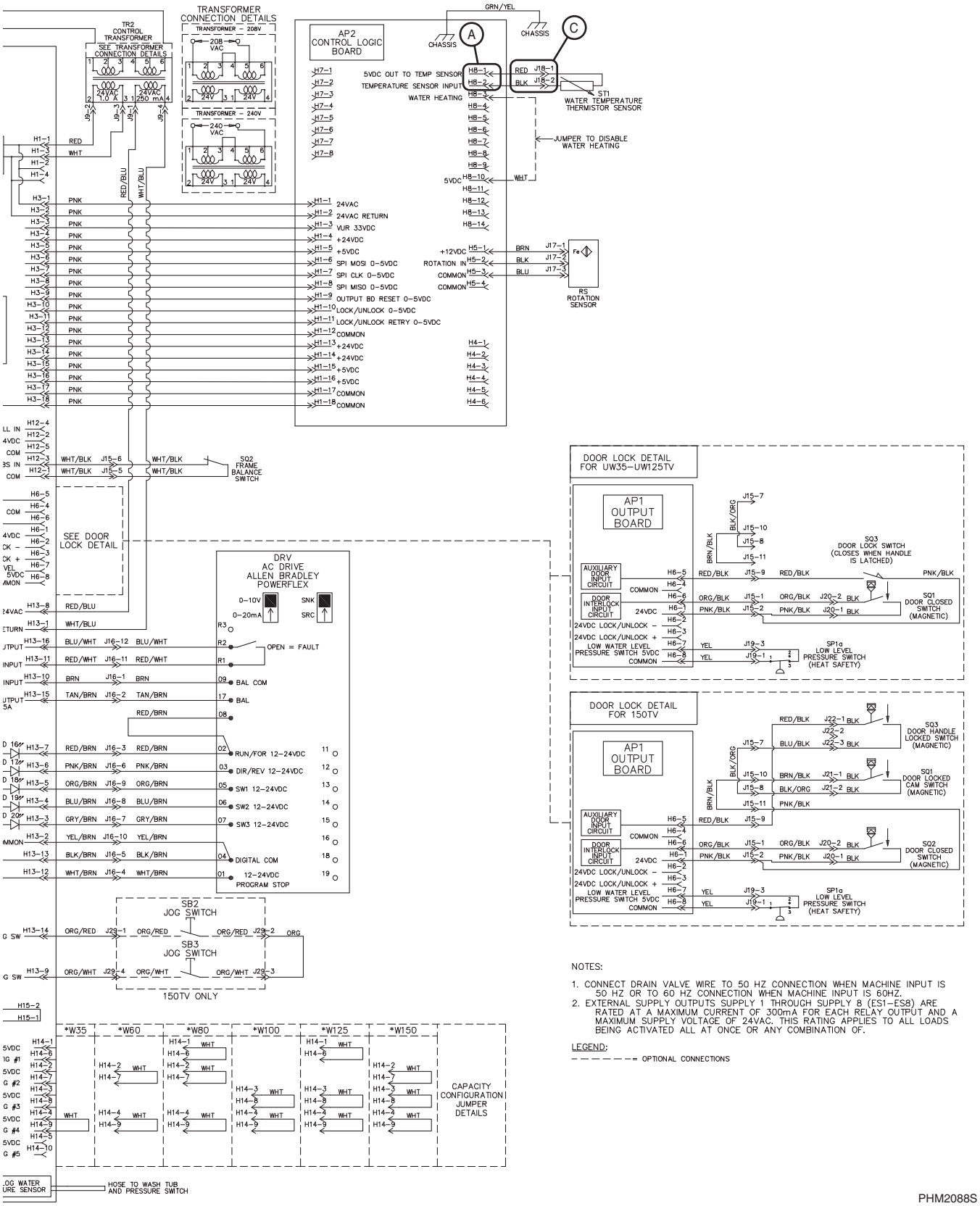

12. EXCESSIVE CYCLE TIME

POSSIBLE CAUSE	TO CORRECT
The wiring into the H5 connection on the AP2 Control Logic Board is disconnected or loose.	Re-connect any loose wiring. Refer to *point A* on the *Excessive Cycle Time wiring diagram*.
The rotation sensor's wiring is disconnected or loose.	Re-connect any loose wiring.
The rotation sensor is out of alignment.	Reset the rotation sensor's distance from the basket pulley to 1/8 inch (1.88 mm). Refer to the Inputs and Outputs menu. If RS highlights while the basket rotates, the rotation sensor is working. Replace the rotation sensor as needed. After recalibrating or replacing the rotation sensor and unlocking the machine's door, turn the machine's power supply off and then back on for the machine to recognize the rotation sensor change.
NOTE: Check the Alarms Menu to find the error that occurred in the last cycle, which will explain why there is excessive cycle time.	

Please refer to the following 2 pages for wiring diagram information.

Excessive Cycle Time (Sheet 1 of 2)

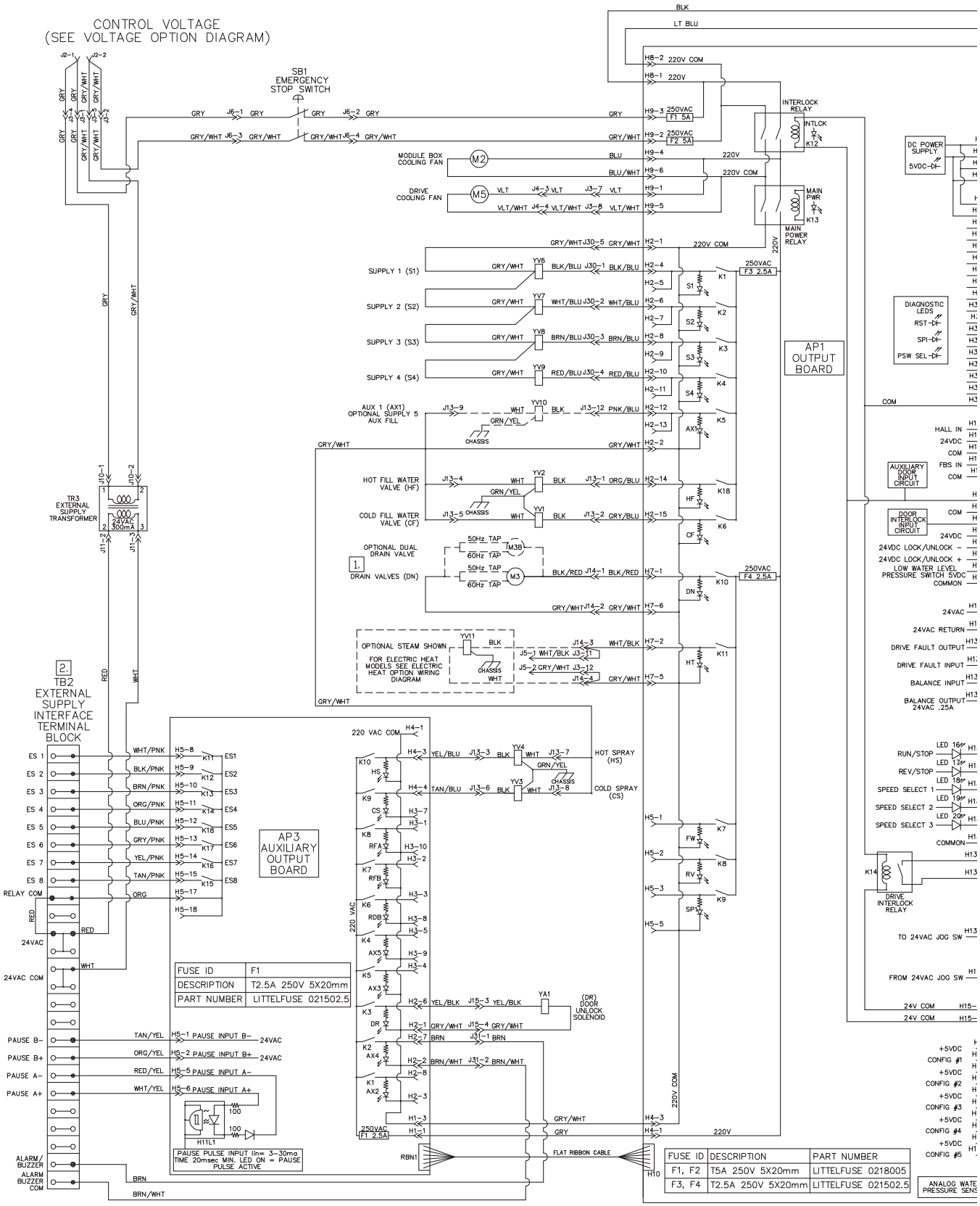

Excessive Cycle Time (Sheet 2 of 2)

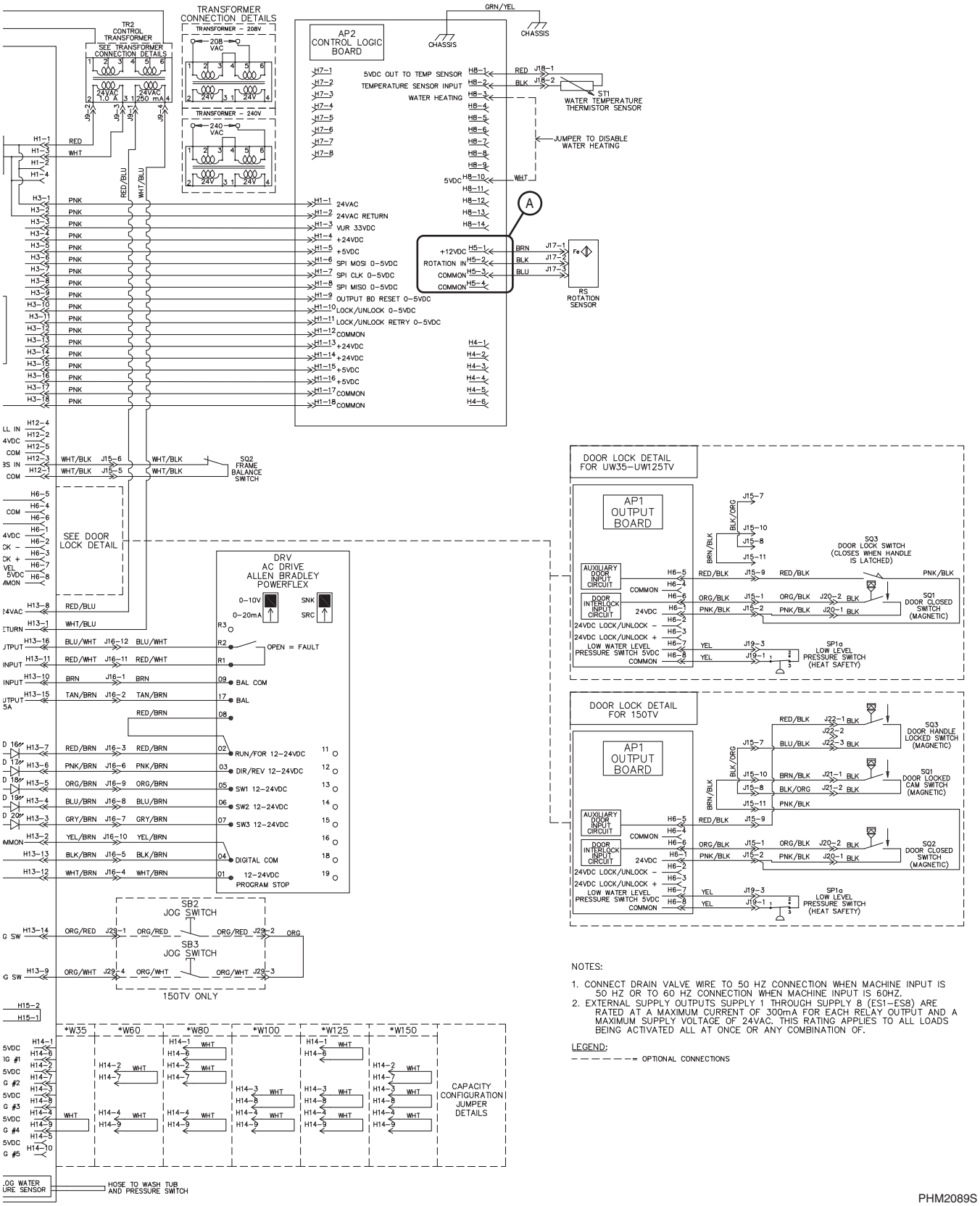

13. CYCLE ABORTED/STOPPED IN MID CYCLE

NOTE: Cycle is terminated and no retry is allowed. Press the BACK key to return to the Cycle Menu.

NOTE: To view a list of faults that have occurred recently, from the Diagnostic Menu, select Alarms.

A frame balance error.	Check the balance switch for the following. Refer to *point A* on the *Cycle Aborted/Stopped in Mid Cycle wiring diagram*. • Make sure the balance switch's cable is connected to terminal H12 on the AP1 Control Board. • Make sure the black and white wires on the switch N.C. and COM are connected. • Using the 0.009-inch feeler gauge, make sure the switch's gap setting is correct. • For UW150 design 2 models, make sure the machine is level to within 3/8 inch from front to back and right to left. Also make sure the machine is grouted properly and that the anchor bolts are tightened sufficiently. Refer to the Installation manual for grouting and anchor bolt specifications.
A fill alarm.	The fill time has been exceeded. Refer to the No Fill Analysis troubleshooting. Also, under the Global Setup Menu, check the Fill Alarm Time.
A water level sensor error.	Make sure the wiring from the H6 connector on the AP1 Board to the water level switch is connected. Check the tubing from the water level switch to the tee for any air leaks. Refer to *point C* on the *Cycle Aborted/Stopped in Mid Cycle wiring diagram*.
A door lock or open error.	Refer to the *Door Errors (Close Door/Lock Door) troubleshooting*.

(continued)

A drive balance switch error.	A drive balance switch error occurs when the state of the drive balance switch is incorrect at the beginning of a drain step. This can happen when a machine cycle is rapid advanced from 1 balancing drain step (while attempting to balance a load prior to an extract step) to another balancing drain step or when the AP1 output board's component responsible for sensing the state of the drive balance switch fails and locks in the state that indicates machine balancing is in progress. This component could also fail in the opposite state, which would result in a machine's inability to balance prior to an extract step, even with an empty basket (i.e., no load to balance). The state of the drive balance switch can be monitored from the Inputs Outputs Menu. The icon for the drive balance switch is BAL and it will highlight during a balancing drain step, which indicates a good balance prior to an extract step. Before replacing the AP1 output board, first verify all wiring harness connections are good and that the drive balance switch's outputs on the drive are functioning properly. While BAL is highlighted in the Inputs Outputs Menu (which indicates a good balance), a voltage of 0VAC should be read across pin 09 and pin 17 of the drive control's terminal strip. 10VAC is present at any other point during balancing. Refer to *point E* on the *Cycle Aborted/ Stopped in Mid Cycle wiring diagram*.
A shorted or open thermistor. **NOTE: The control has a temperature range of 5-220 degrees F and will allow programming temperatures between 35 and 205 degrees F.**	Verify that the temperature thermistor sensor is connected to H8-1 and H8-2 of the AP2 Control Logic Board. Replace the thermistor as needed. Refer to *point B* on the *Cycle Aborted/Stopped in Mid Cycle wiring diagram*.
An S.P.I. error.	Check the wiring from H3 on the AP1 Output Board to H1 on the AP2 Control Logic Board for loose connections.

Please refer to the following 2 pages for wiring diagram information.

Cycle Aborted/Stopped in Mid Cycle (Sheet 1 of 2)

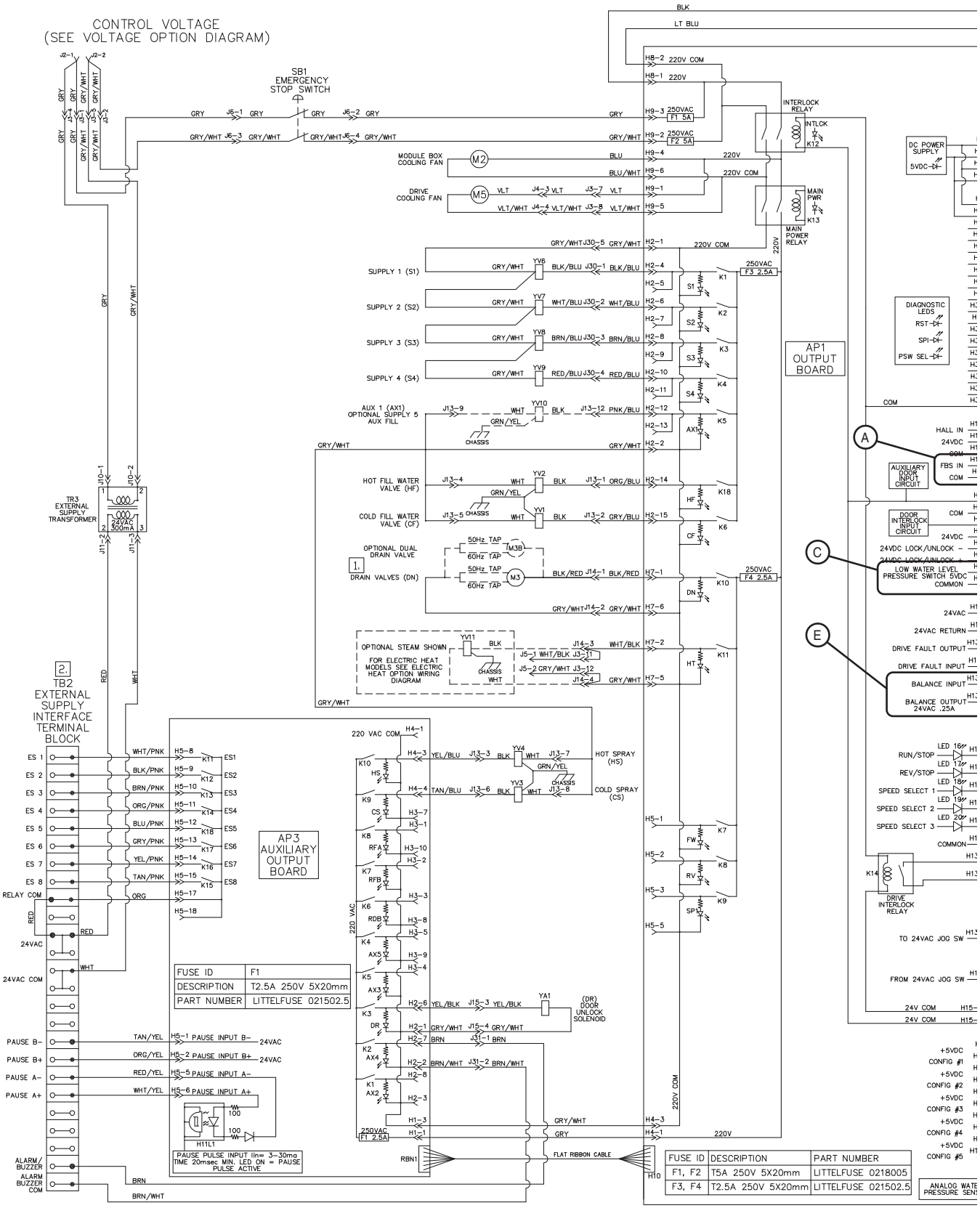

Cycle Aborted/Stopped in Mid Cycle (Sheet 2 of 2)

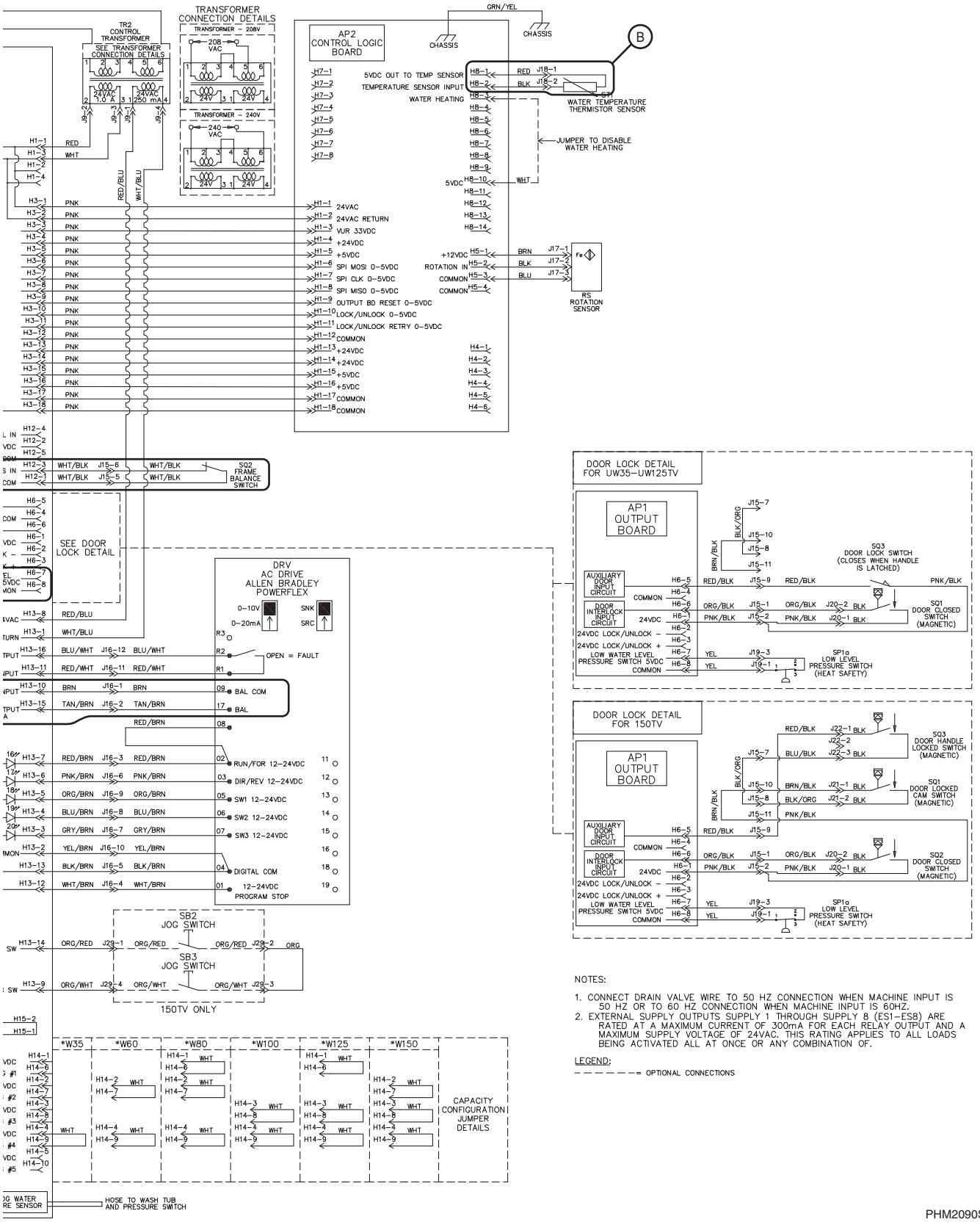

14. DRAIN ERROR

NOTE: If LED 13 on the AP1 Output Board is on, the drain is closed.

POSSIBLE CAUSE	TO CORRECT
Loose wiring connections on H7-1 and 6 of the AP1 Output Board.	Re-connect or replace any loose wires. Refer to *point A* on the *Drain Error wiring diagram*.
Loose or crimped wiring connections on the J14 plug.	Re-connect or replace any loose or crimped wires. Refer to *point B* on the *Drain Error wiring diagram*.
The machine will not drain.	Check the voltage being supplied to the drain valve. The voltage should be 120V or 220V, depending on the machine's voltage requirements. Check for debris that may be clogging the valve or preventing it from opening.
The drain valve closes, but it doesn't open and close as programmed throughout the cycle.	Verify the supply voltage frequency. Check to see if proper tap 50hz or 60hz is connected to drain valve. Refer to *Figure 2*.
If the above corrections do not clear the drain error, replace the drain valve.	

Drain Valve Terminal Connection

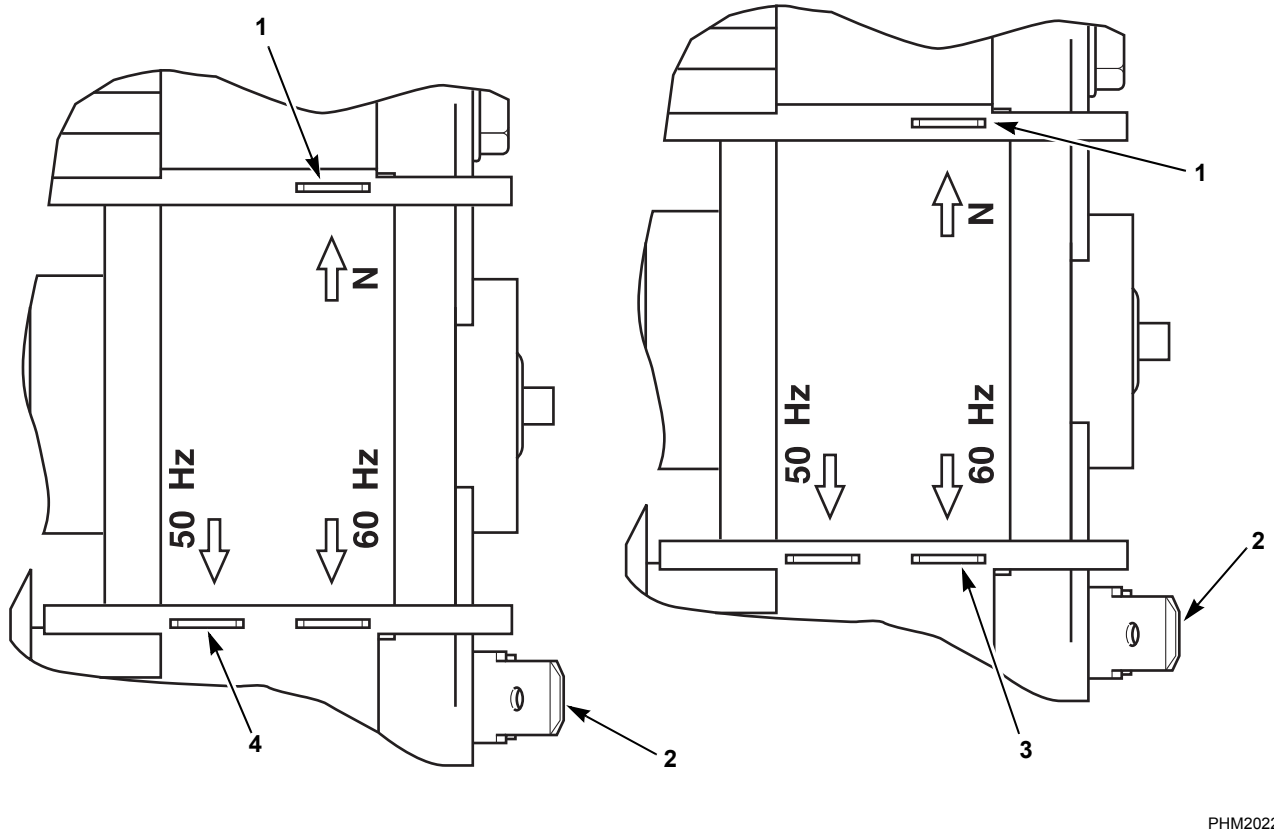

1 Neutral Terminal
2 Ground Terminal
3 60hz Units – connect the neutral terminal and the 60hz terminal.
4 50hz Units – connect the neutral terminal and the 50hz terminal.

Figure 2

Please refer to the following 2 pages for wiring diagram information.

Drain Error (Sheet 1 of 2)

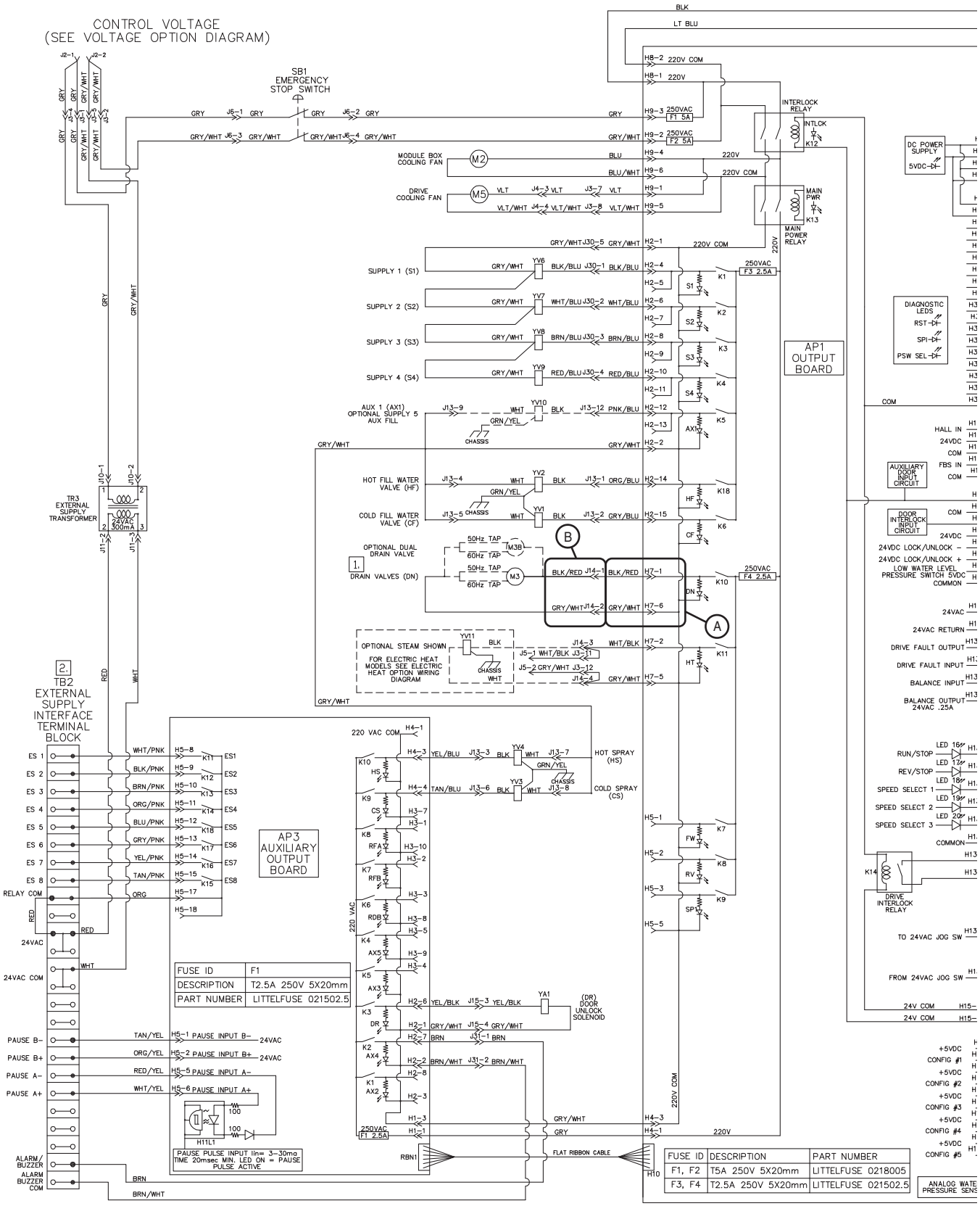

Drain Error (Sheet 2 of 2)

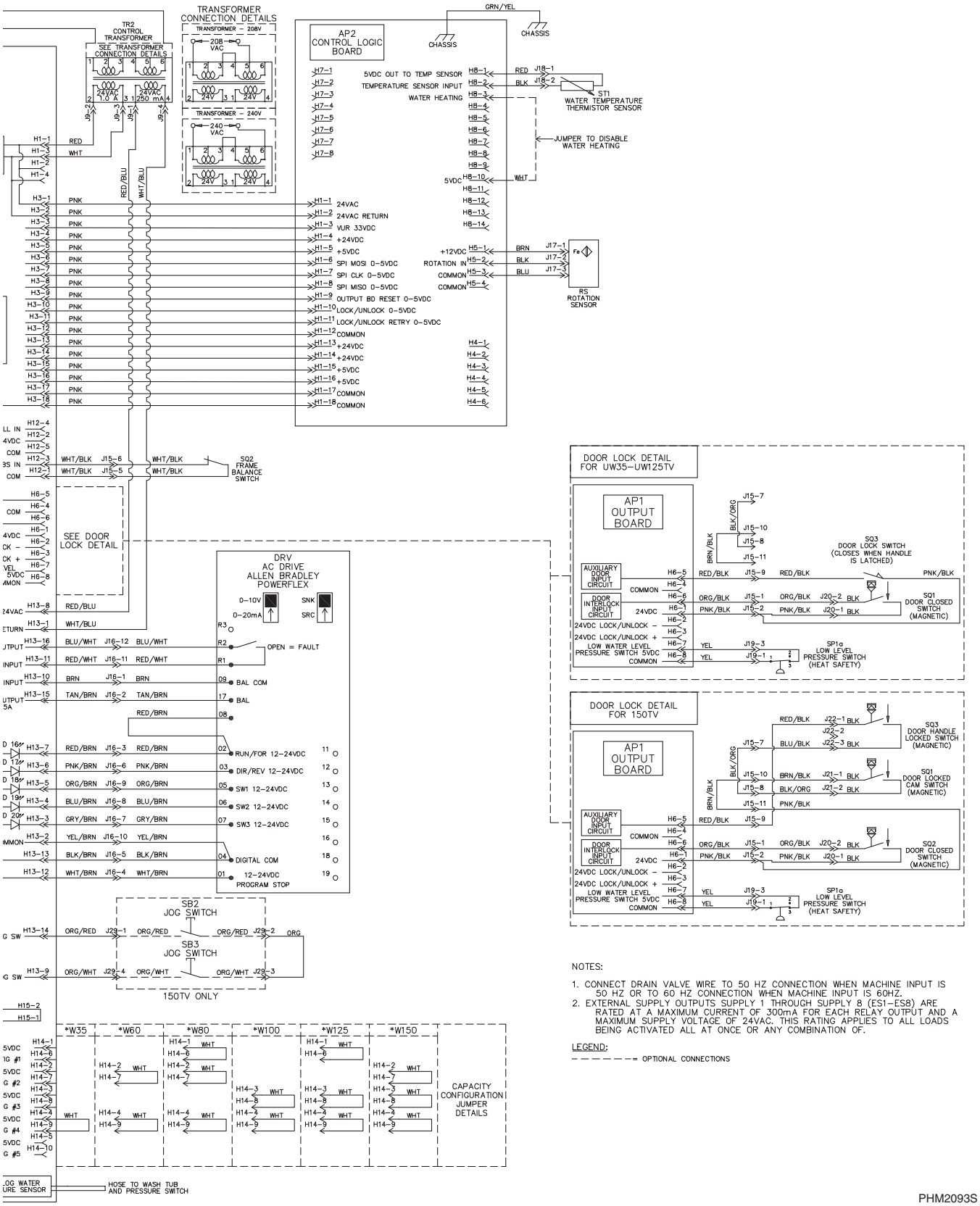

15. LUBRICATE BEARINGS DISPLAY

NOTE: This window is displayed after every 200 hours of machine operation to inform the operator that the bearings need to be lubricated. Refer to *Figure 3***.**

POSSIBLE CAUSE	TO CORRECT
The Lubricate Bearings screen is displayed on the control. Refer to *Figure 3*.	To reset the bearing lubrication timer... 1. From the Lubricate Bearings screen, press the **Back** button to display the Cycle Menu. 2. Press and hold the **Stop**, **Back**, and **LCD** buttons to display the System Menu. 3. Using the arrow buttons, highlight "**Reset Bearing Timer**" and press **Enter**.

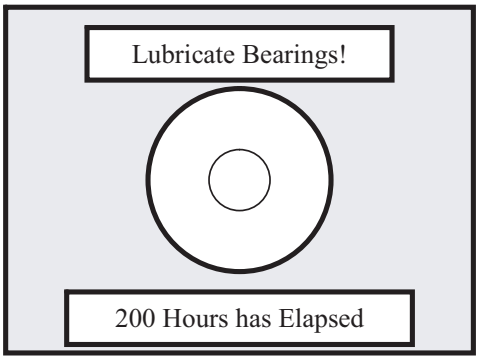

PHM2094S

Figure 3

NOTE: Grease zerk fittings are located on the left side of the control module. Refer to *Figure 4***.**

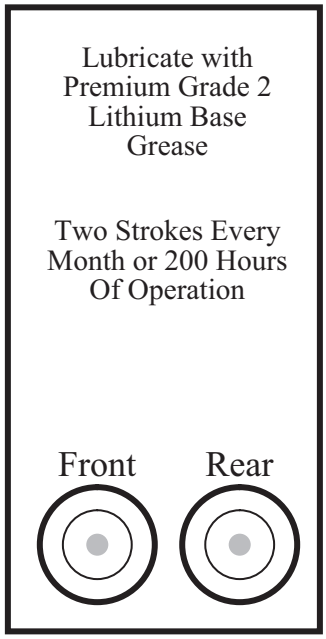

PHM2095S

Figure 4

16. NO AUDIBLE SIGNAL

POSSIBLE CAUSE	TO CORRECT
The audible signal for the keypad is turned off.	To turn the audible signal on... 1. From the Cycle Menu screen, press and hold the **Stop**, **Back**, and **LCD** buttons. The System Menu screen is displayed. 2. Using the arrow buttons, highlight **Program** and press the **Enter** button**.** 3. Using the arrow buttons, highlight **Global Setup** and press the **Enter** button**.** 4. Using the arrow buttons, highlight **Audio/Ext. Signal** and press the **Enter** button**.** 5. Make sure the Keypad window is highlighted. Press the up or down arrow button to change the display from “Off” to “On”. 6. Press the **Enter** button.
Debris or moisture is present on the AP2 Control Logic Board’s audible sensor.	Clean the audible sensor. If, after cleaning the audible sensor, the audible signal still doesn’t function, replace the AP2 Control Logic Board. **NOTE: If only the audible sensor is not functioning, AP2 Control Logic Board can be used as normal. It will only not have use of the audible sensor.**

17. UW150 JOG OPERATION ERRORS

POSSIBLE CAUSE	TO CORRECT
The machine isn’t in idle mode.	Make sure the Cycle Menu is displayed and that a cycle isn’t in process.
The machine’s door isn’t open.	Open the door.
The jog feature’s buttons are not being pressed correctly.	Press and hold both buttons for 5 seconds until jog operation starts. Continue holding the buttons until the basket is in the desired position.
The jog switch’s wiring is loose or the switch isn’t receiving voltage.	Check for loose wiring connections on H13-9 and 14 on the AP1 Board. Refer to *point D* on the *UW150 Jog Operation Errors wiring diagram*. • Check J Plug 29 1, 2, 3 and 4 for loose connections. Check between terminals 1 and 2, 2 and 3, and 3 and 4 for 24V. • Check the jog switch’s SB2 and SB3 pushbutton connections for loose wiring or not measuring 24V.

WARNING

To avoid personal injury, do NOT reach into the basket while it is rotating. Keep all personnel at a safe distance from the machine while using the basket Jog Feature.

W641

UW150 Jog Operatio Errors (Sheet 1 of 2)

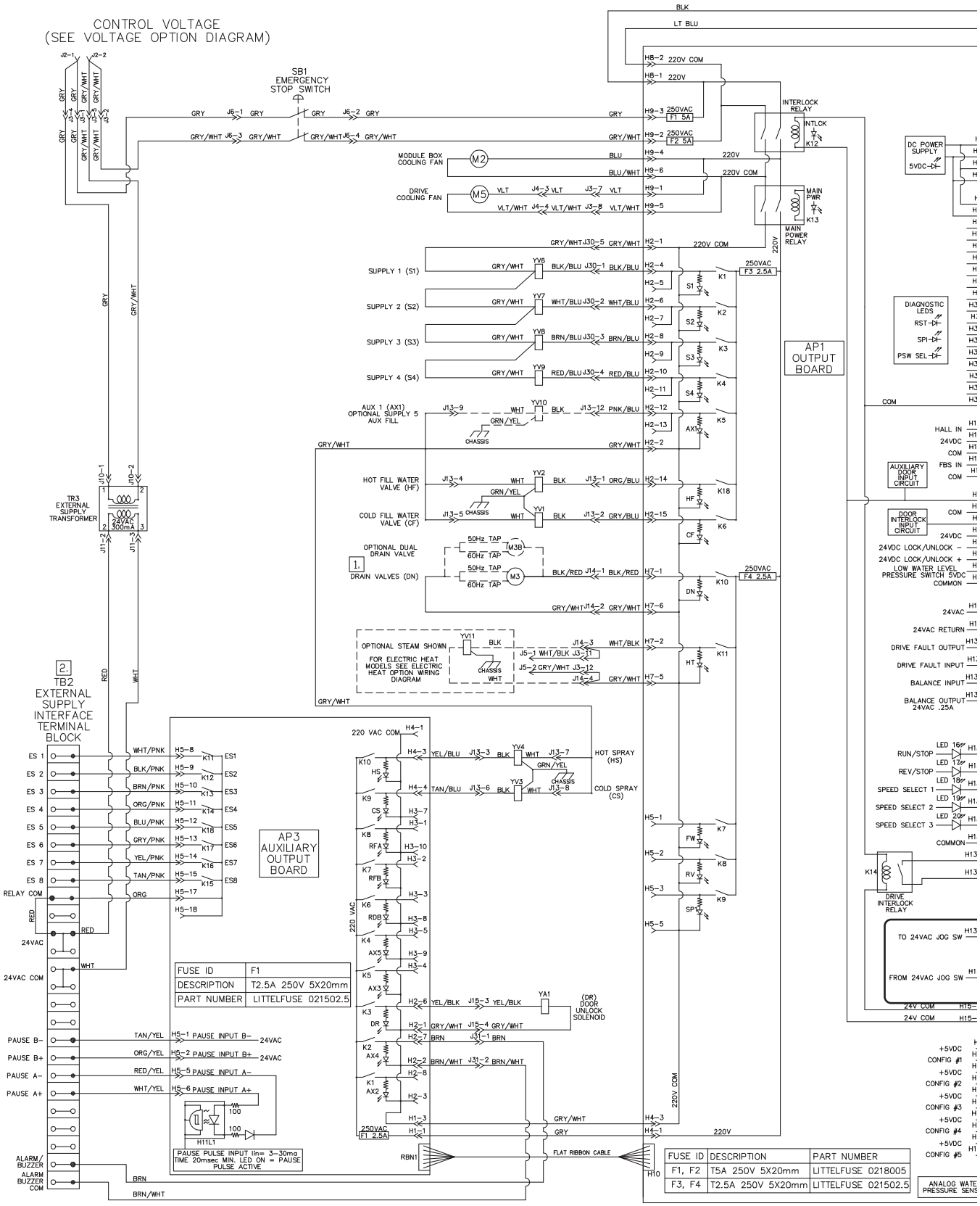

WU150 Jog Operation Errors (Sheet 2 of 2)

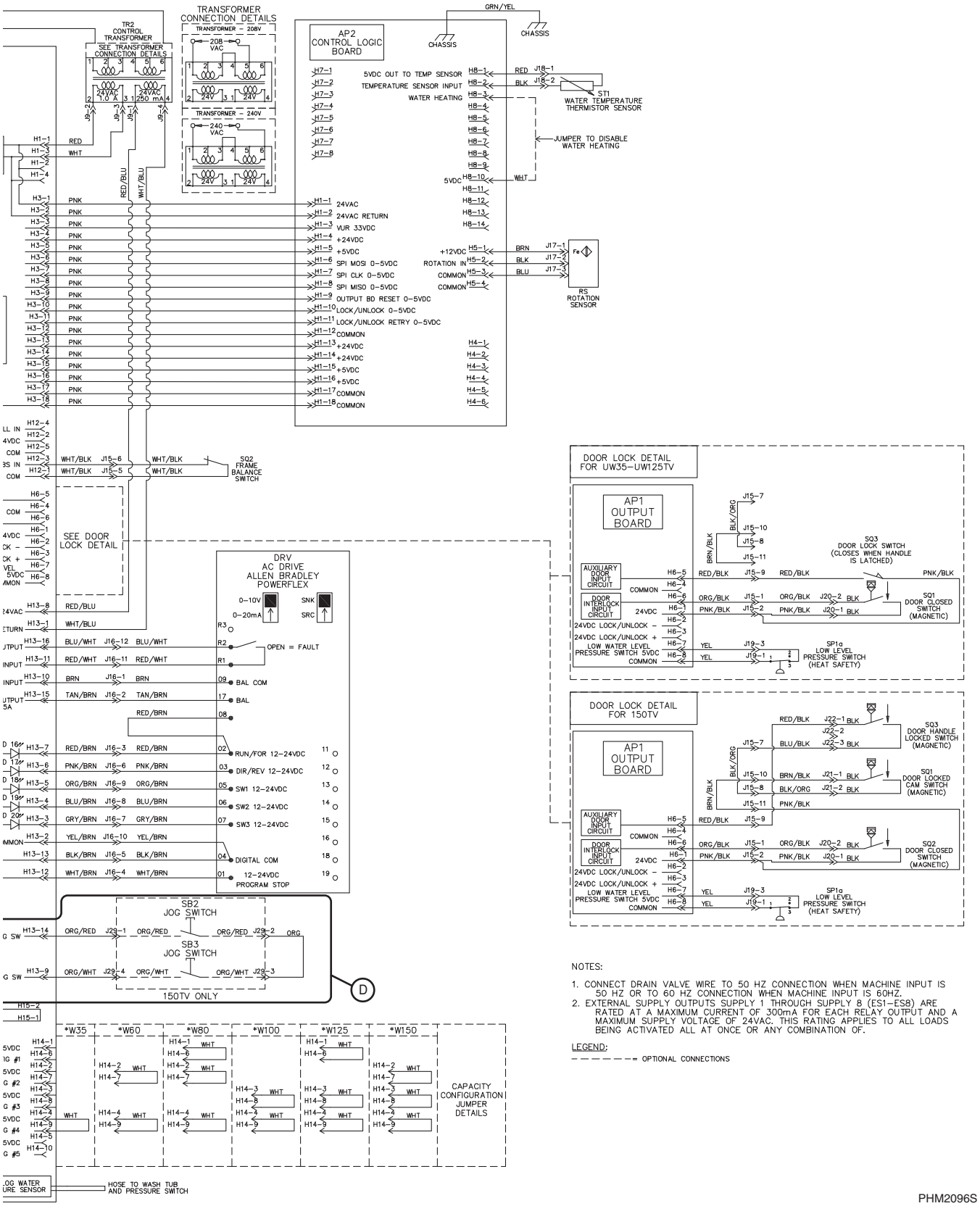

18. ABNORMAL OPERATION (water level, coast time etc.)

POSSIBLE CAUSE	TO CORRECT
The capacity jumper configuration at H14 on the AP1 Output Board is incorrect.	Refer to *Figure 5*.
The pressure hose is not connected.	Connect the pressure hose.

AP1 Output Board H14 – Capacitor Configuration Jumper Detail

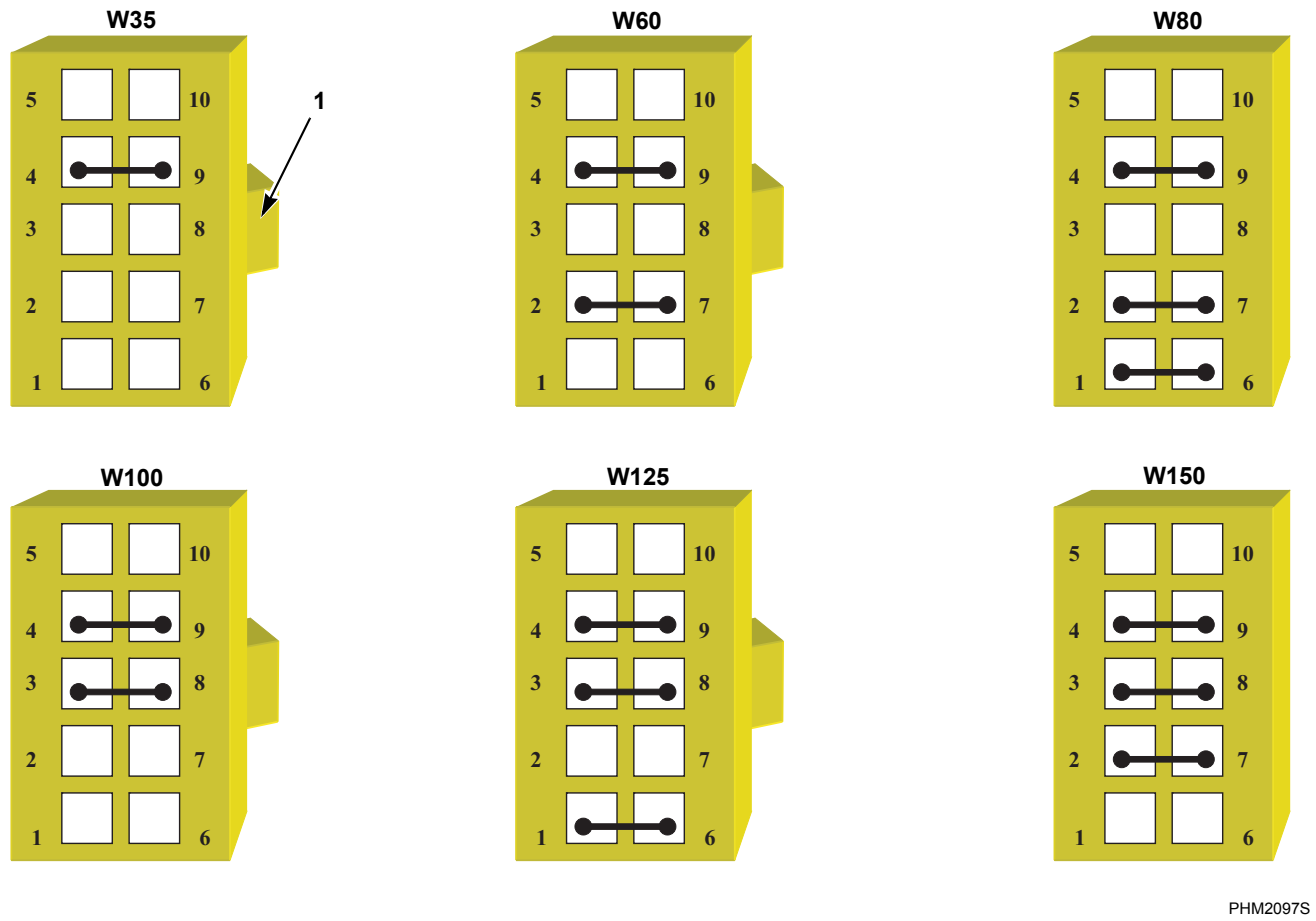

1 Hold the plug facing in this direction with the snap on the right side.

Figure 5

19. PDA COMMUNICATION PROBLEM

NOTE: Control will not allow the PDA to download a machine cycle it is currently running.

POSSIBLE CAUSE	TO CORRECT
Wrong comm port on the PDA.	Search the ports on the PDA to find correct port for IR.
The AP1 or AP2 board isn't properly grounded.	Check for ground to the AP2 chassis. Check for ground from AP1 chassis to the pad on AP1. Refer to *Figure 6*.

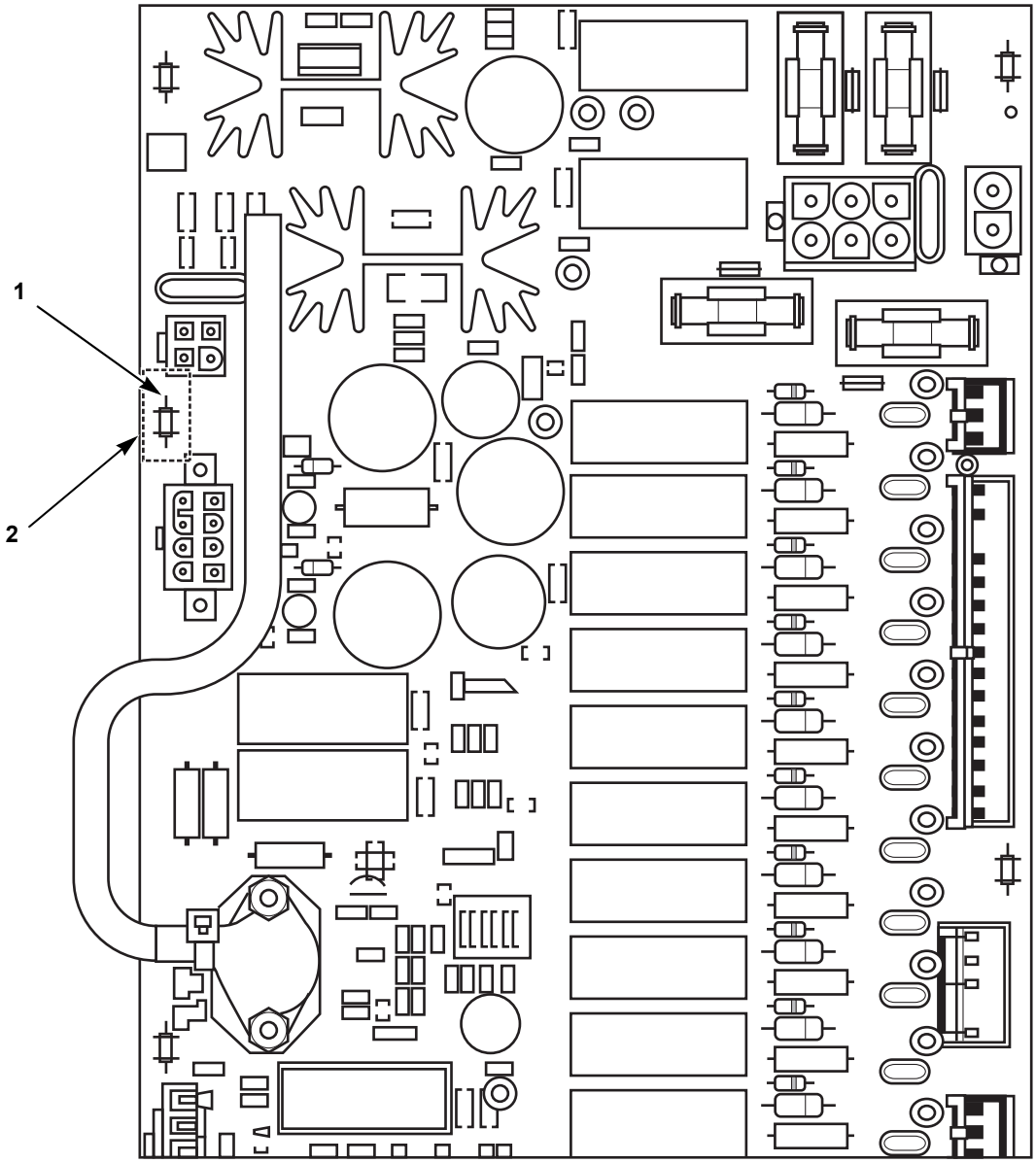

1 AP1 Chassis Tab making contact with the ground pad.
2 AP1 grounding pad (silver).

Figure 6

20. J-PLUG CONNECTIONS (Inside of Control Module)

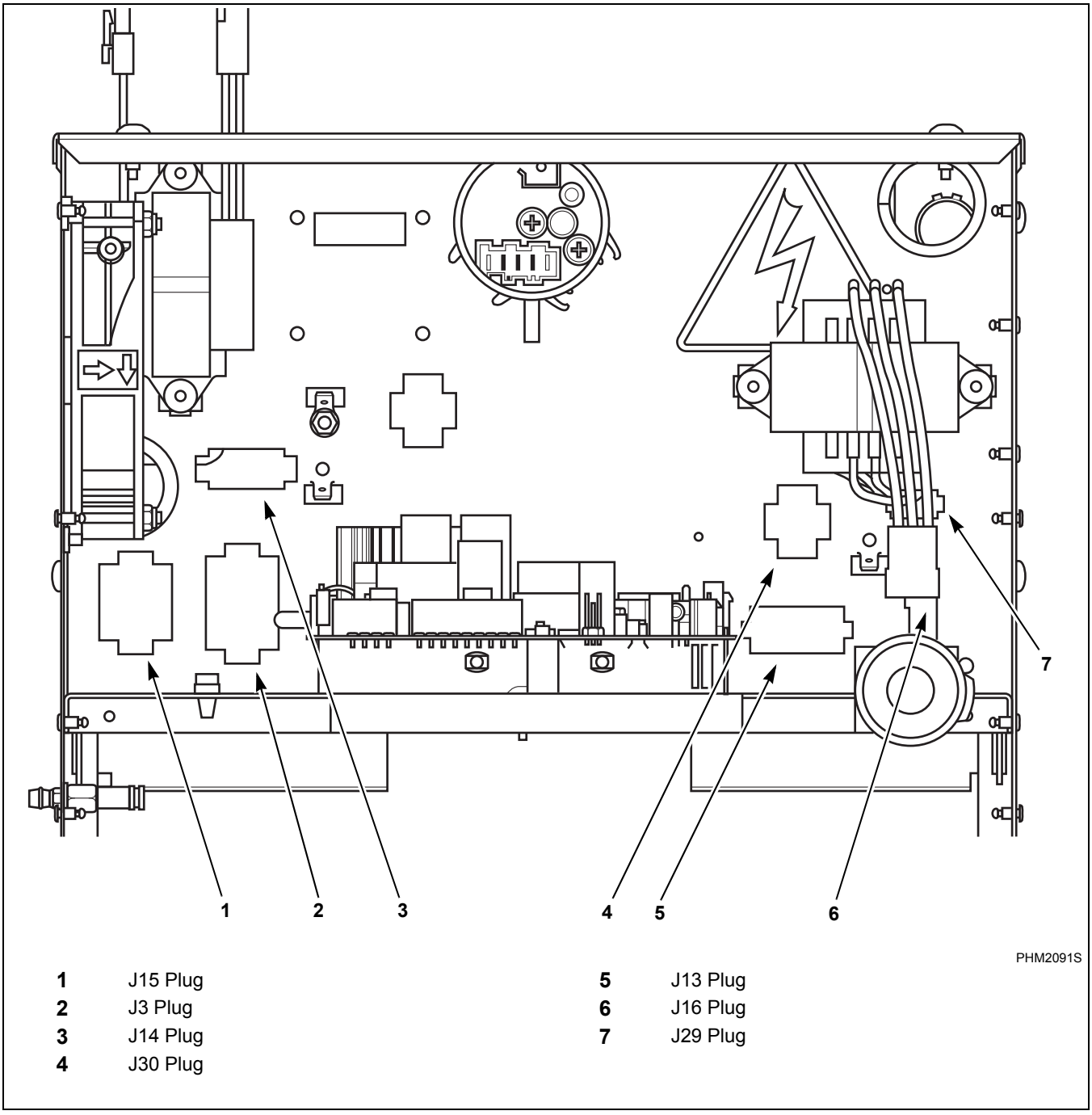

1	J15 Plug	**5**	J13 Plug
2	J3 Plug	**6**	J16 Plug
3	J14 Plug	**7**	J29 Plug
4	J30 Plug		

Figure 7

21. J-PLUG CONNECTIONS (Rear of Control Module)

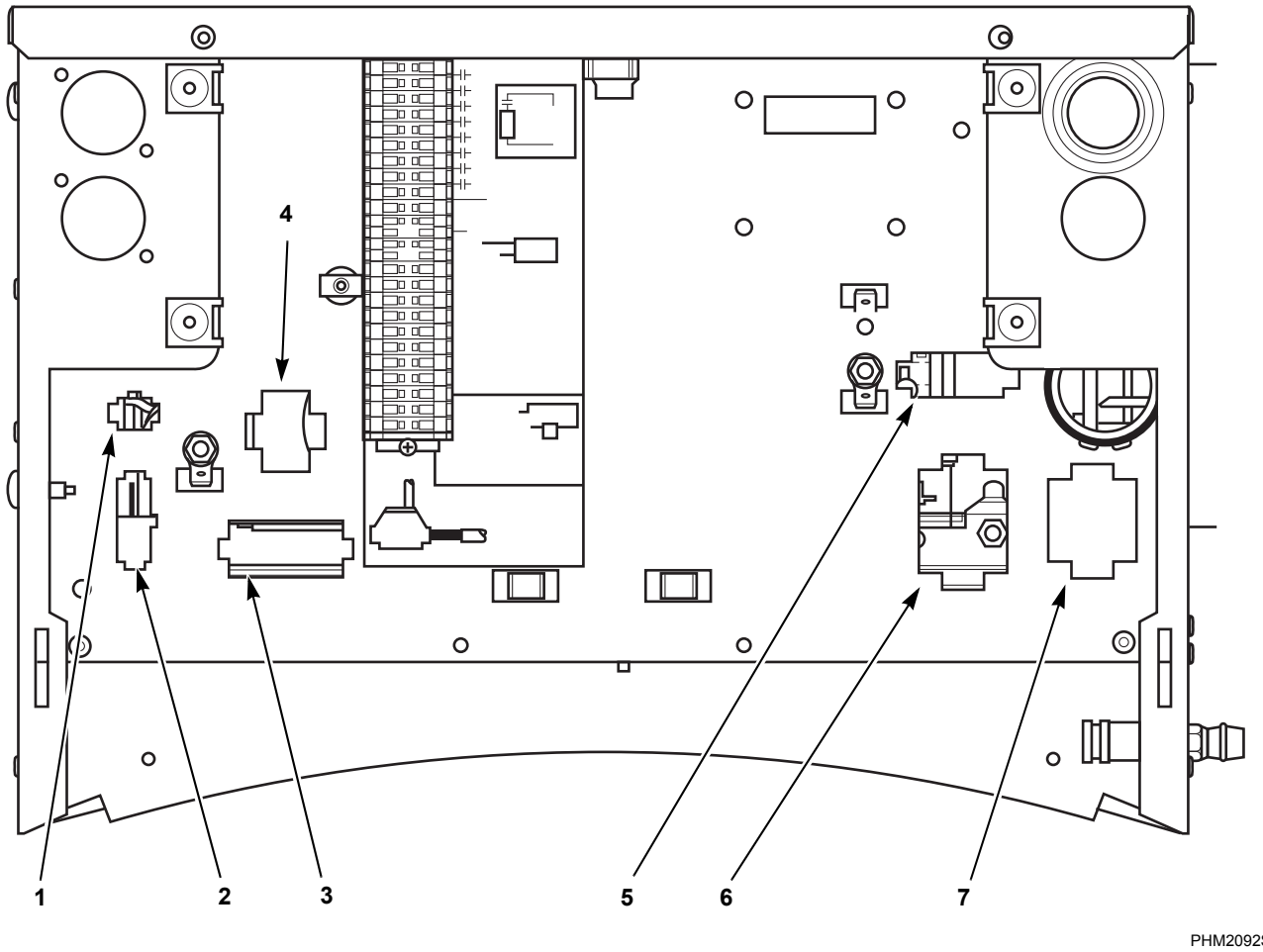

1	J29 Plug	**5**	J14 Plug
2	J16 Plug	**6**	J3 Plug
3	J13 Plug	**7**	J15 Plug
4	J30 Plug		

Figure 8