Dexter WCN55AEK (T900) Drain Valve Group

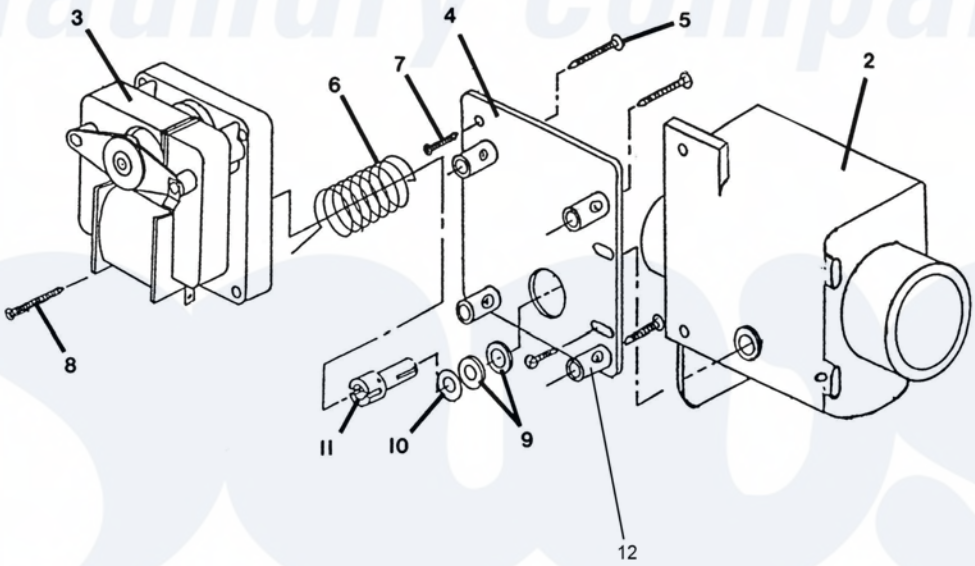

Dexter Commercial Dexter WCN55AEK (T900) Washer Parts Parts Diagram Drain Valve Group
Click on the part number to view part

Item	Original Part Number	Replaced By	Status	Part Description
1	9379-187-001		Not Available	Valve Drain before Serial # 482181
2	9064-070-001			Body, Valve (w/ball)
3	9914-137-001	9914-137-011		Motor & Gear Train (complete)
4	9452-538-001			Plate, Motor Mtg
5	8639-994-001			Screw
6	9534-339-001			Spring, Drive
7	9545-054-001			Screw
8	9545-054-002		Not Available	Screw
9	9532-134-001			Seal, V Packer
10	8641-584-001			Washer
11	9451-196-001			Pin, Main Drive

12	9538-149-001	Plate (spacers needed for replacement motor mtg. plate)