Maytag A16CT 01 - FRONT VIEW

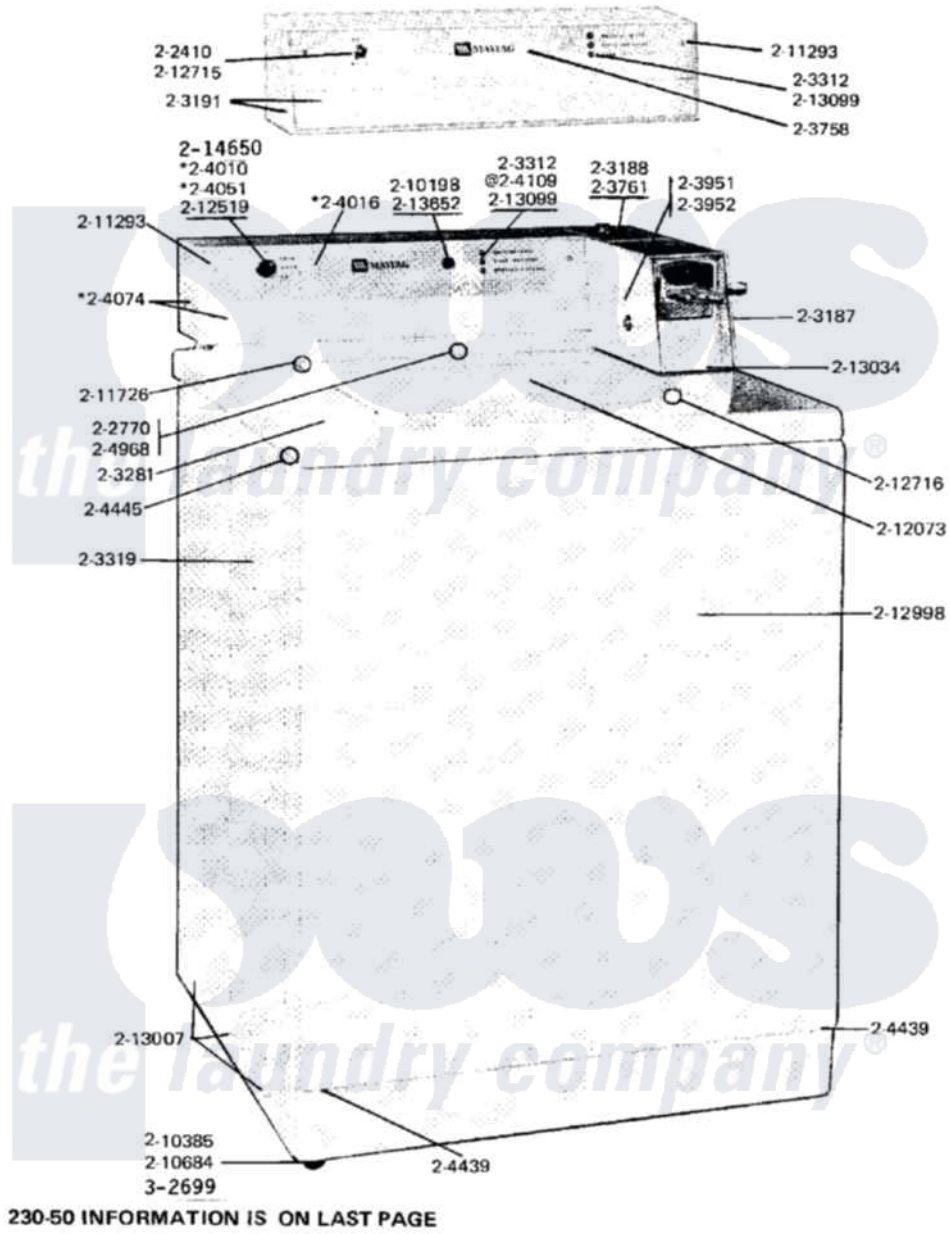

Maytag Commercial Maytag A16CT Washer Parts Parts Diagram 01 - FRONT VIEW
Click on the part number to view part

Item	Original Part Number	Replaced By	Status	Part Description
001	NLA		Not Available	TEMPERATURE SWITCH
002	NLA		Not Available	OUTER CASE (WHT)
003	203188		Not Available	TIMER ACCESS DOOR (WHT)
004	NLA		Not Available	CONTROL COVER
005	NLA		Not Available	OUTER CASE (WHT)
006	NLA		Not Available	TOP COVER (WHT)
007	NLA		Not Available	OUTER CASE (WHT)
008	NLA		Not Available	3 BULB SIGNAL LIGHT (120-60)
009	NLA		Not Available	CABINET (WHT)
010	NLA		Not Available	CONTROL PANEL W/LENS
011	203761			DOOR, ACCESS (WHT)
012	NLA		Not Available	CONTROL CENTER (WHT)
013	NLA		Not Available	COIN BOX (WHT)
014	NLA		Not Available	SUPER SECURITY COIN BOX

015	204010			Temperature Switch
016	NLA		Not Available	CONTROL PANEL ASSEMBLY
017	204051	22204051		Knob
018	NLA		Not Available	CONTROL COVER (WHT)
019	204109			Light, Signal
020	NLA		Not Available	CONTROL CENTER W/GASKET
021	NLA		Not Available	CONTROL CENTER W/GASKET
022	NLA		Not Available	CONTROL CENTER W/GASKET
023	204439			Screw And Fstner Assembly
024	204445			Screw And Fastener Assembly
025	204968			Plunger And Bracket Assembly--W
026	205415	279347		Switch-Lid
027	210198			Fastener
028	210385			Lock Nut For Adjustable Leg
029	210684			Foot, Adjustable Leg
030	NLA		Not Available	SCREW, No.8 X 1/2 INCH
031	211726			Hinge, Ball Lid
032	212073	216073		LID (WHITE)
033	212519	488234		Screw 8-32 X 1/4
034	NLA		Not Available	KNURLED NUT, TEMP. SWITCH
035	212716			Bumper, Lid
036	212982	22001650		Fastener, Spring
037	212998		Not Available	PANEL, FRONT (WHT)
038	213007			Xfor Cabinet See Cabinet, Back
039	NLA		Not Available	GASKET UNDER CONTROL CENTER
040	213099			Lens For Control Panel
041	213122	27001200		Screw
042	NLA		Not Available	LID BUMPER
043	214650			Screw For 2-4051 Knob
044	Y302699	22003428		Leg, Adjustable
045	NLA		Not Available	EXTERNAL/INTERNAL LOCK WASHER

the laundry company®