Maytag A25CA 07 - BASE, PUMP, MOTOR & COMPONENTS

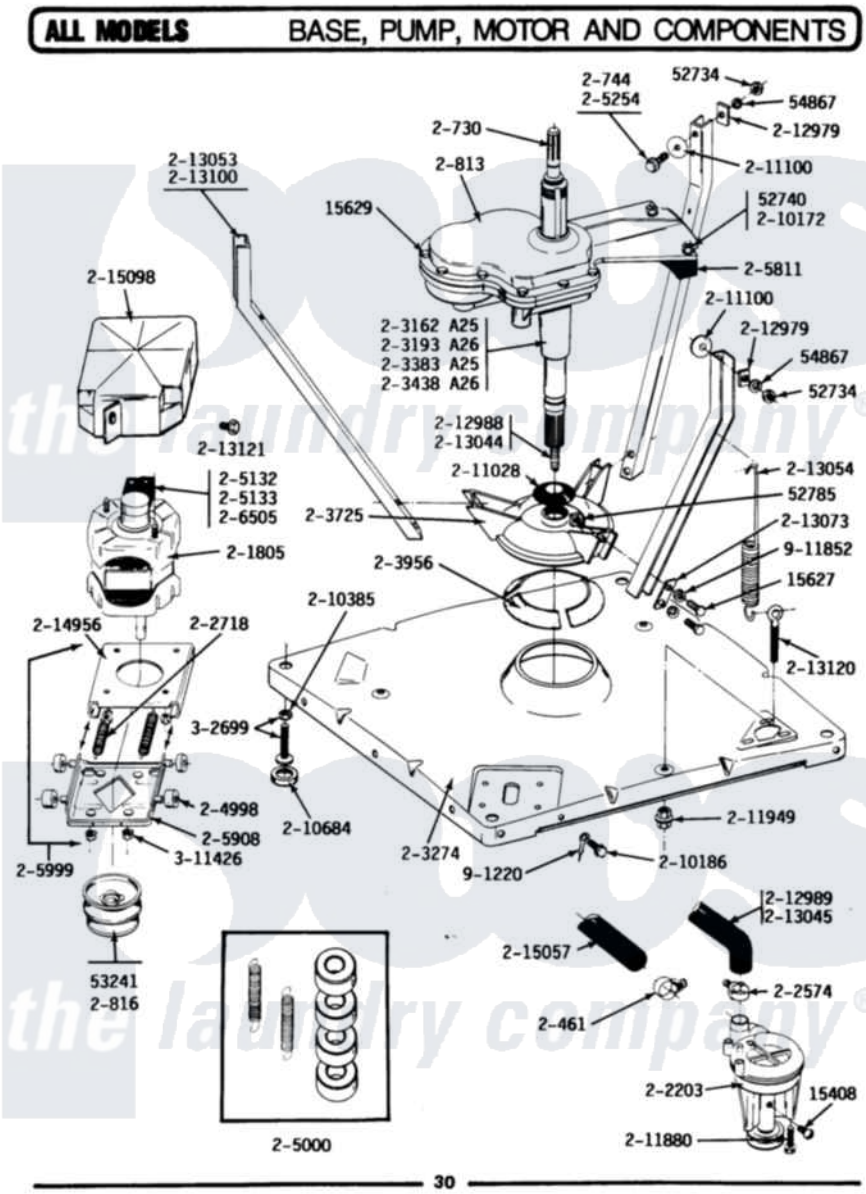

Maytag Commercial Maytag A25CA Washer Parts Parts Diagram 07 - BASE, PUMP, MOTOR & COMPONENTS
Click on the part number to view part

Item	Original Part Number	Replaced By	Status	Part Description
001	Y015408	22003235		Screw, Bearing Insert
002	Y015627			Screw- Hex
003	Y015629			Bolt, Grinding Chamber
004	Y052734			Nut, Carrage Bolts And Bracket
005	Y052785			Nut, Brace To Damper
006	Y053241			Set Screw, Motor Pulley
007	Y054867			Washer, Lock
008	200461	285655		Clamp, Hose
009	200730	22002124		Shaft- Agi
010	200744	W10175939		Bolt
011	NLA		Not Available	GEAR CASE COVER ASSEMBLY
012	200816	6-2008160		Pulley- MO
013	201805	12002351		Motor-Drve
014	202203	6-2022030		Pump As Pa
015	202574	3367052		Clamp, Hose

016	202718			Springs, Tension
017	NLA		Not Available	GEAR HOUSING W/STUDS & TUBE
018	NLA		Not Available	GEAR HOUSING W/STUDS & TUBE
019	203274			Base With Damper Pads
020	203383	W10172458		Transmison
021	203438	W10172457		Transmison
022	203725			Damper W/Bolt And Clip
023	203956			Damper Pad Kit
024	Y204998	205000		Roller And Spring Kit 4+Spr
025	205000			Roller And Spring Kit 4+Spr
026	205132		Not Available	SWITCH, MOTOR EXTERNAL START No.201664-14,205463-4 & 201800-4
027	205133		Not Available	(PROD. IDNo. 2-1664-8 & 2-5463)
"	NLA		Not Available	SWITCH, MOTOR START PROD. NO.
028	205254	W10175938		Bolt
029	NLA		Not Available	COUNTERWEIGHT
030	205908			Motor Mount Assembly
031	205999			Motor Mount Assembly
032	206505		Not Available	PROD. No.201664-15, & No.205463-3.
"	NLA		Not Available	SWITCH, MOTOR START PROD. NO.
033	NLA		Not Available	LOCK WASHER
034	210186	3370225		Screw
035	210385			Lock Nut For Adjustable Leg
036	210684			Foot, Adjustable Leg
037	211028	22001586		Deflector, Water
038	211100			Washer, Outer Tub
039	211880			Screw, HeX Head No.10 X 1/2 Inc
040	211949			Nut, Adjustment Eyebolt
041	212979		Not Available	WASHER, TUB BRACE
042	212988			Part Not Used
043	Y212989			Hose, Outer Tub To Pump
044	213044			Shaft, Center
045	213045			Hose, Outer Tub Part Not Used
046	213053			Brace, Tub Part Not Used
047	213054			Centering Spring - 3 Used
048	213073			Washer, Double Brace
049	213100		Not Available	PART NOT USED
050	213120	216416		Bolt, Eye/Centering Spring
051	213121	3400111		Screw, 12-14 X 5/8
052	214956			Motor Mount Assembly
053	215057	211704		Hose, Drain
054	215098			Shield, Motor
055	Y302699	22003428		Leg, Adjustable
056	Y311426	3400029		Nut, Adapter Plate
057	901220			Ground Wire
058	911852	486009		Lockwasher

the laundry company®