Maytag DE21CT 08 - FRONT PANEL\DOOR

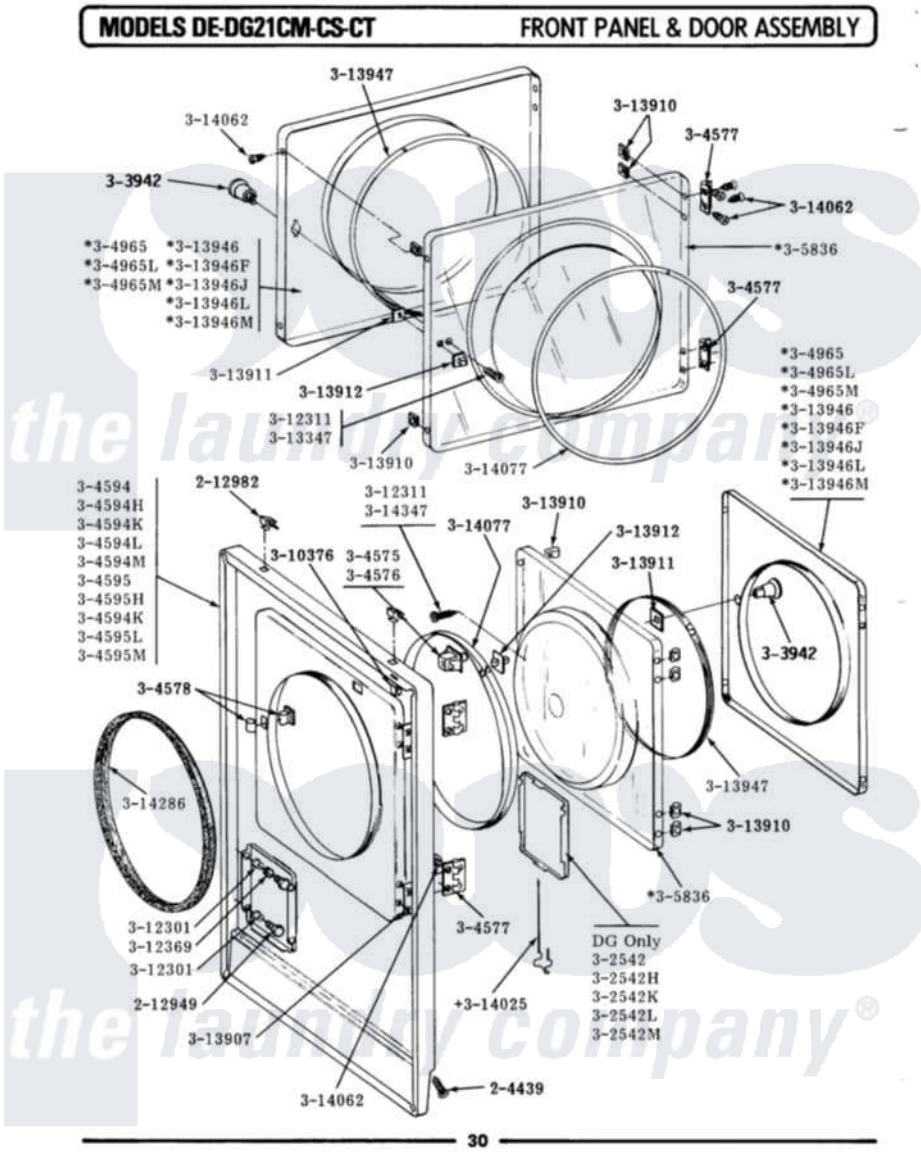

Maytag Commercial Maytag DE21CT Dryer Parts Parts Diagram 08 - FRONT PANEL\DOOR
Click on the part number to view part

Item	Original Part Number	Replaced By	Status	Part Description
001	204439			Screw And Fstner Assembly
002	212949	22001866		Screw, Relay
003	212982	22001650		Fastener, Spring
004	Y304576	W10169313		Switch-Dor
005	Y304577	33001230		Hinge, Door
006	Y304578	LA-1003		Door Catch Kit
007	NLA		Not Available	FRONT PANEL-WHITE
008	304965			Door Complete-White
009	NLA		Not Available	INNER DOOR WITH KNOB & SCRE
010	NLA		Not Available	KNOB AND SCREW
011	Y310376			Clip, Door Switch Harness
012	NLA		Not Available	BUSHING FOR ACCESS STUD
013	NLA		Not Available	SCREW----NA
014	312369			Sleeve, Access Panel Stud Part Not Used

015	Y313340			LABEL, LINT SCREEN INSTRUCTION
016	Y313907			Fastener, Twin
017	Y313910			Clip, Door Liner To Outer Panel
018	Y313911			Door Strike Retainer
019	Y313912	306436		Door Latch Kit--W
020	Y313927			INSTRUCTION LABEL
021	Y313946		Not Available	DOOR PANEL-WHITE
022	Y313947			Gasket For Window
023	Y314025			Latch For Access Door
024	Y314062			Screw, Door Hinge And Panel
025	314077			Door Seal
026	NLA		Not Available	GAS IGNITION LABEL
027	314286			Seal For Front Panel
028	NLA		Not Available	SCREW FOR DOOR KNOB----NA

the laundry company®
the laundry company®