Maytag GDE19CA 06 - HEATER

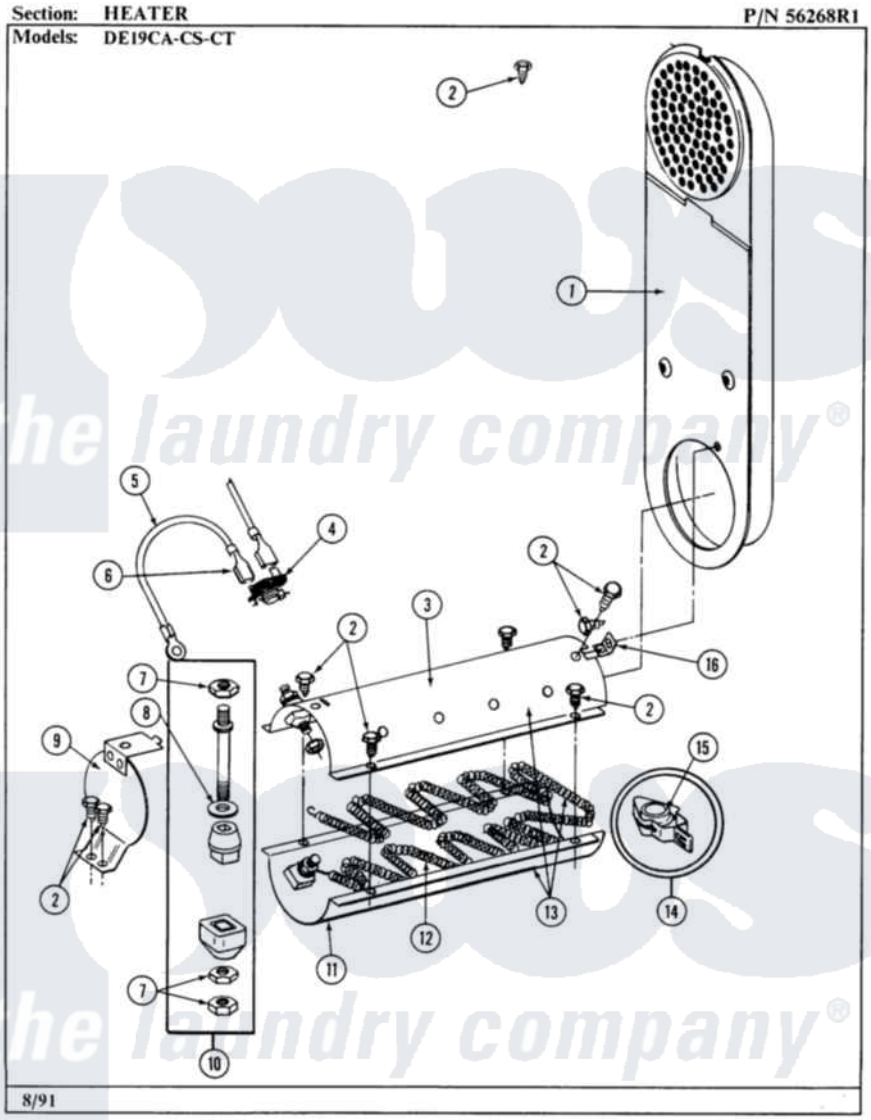

28

Maytag Commercial Maytag GDE19CA Dryer Parts Parts Diagram 06 - HEATER
Click on the part number to view part

Item	Original Part Number	Replaced By	Status	Part Description
001	Y303362			Inlet Duct Assembly - DE
002	211294	90767		Screw, 8A X 3/8 HeX Washer Head Tapping
003	Y313575		Not Available	HEATER CHAMBER, TOP
004	303396			Thermostat, Hi-Limit
"	303896			Hi-Limit Thermostat-Canada
005	Y304693			Jumper Wire
006	210745			Wire Terminal
007	311484	112432		Nut
008	311093			Washer, Terminal Connection
009	304124		Not Available	HEATER SHIELD
010	Y304596			Terminal Insulator Assembly
011	Y313576			Heater Chamber, Bottom
012	Y304837	W10116793		Element
"	Y313537			Heater Element 240 Volt
013	Y303778			Heater Assembly Complete
				HEATER ASSY, COMPLETE

"	Y303856	Not Available	HEATER ASSY. COMPLETE (208V)
014	Y303881		Clip And Insulator Assembly
015	Y313270		Insulator For Heater Elemen
016	Y312890		Retainer, Heater Chamber

the laundry company®
the laundry company®
the laundry company®