Maytag MAH20PDA3W 03 - TOP

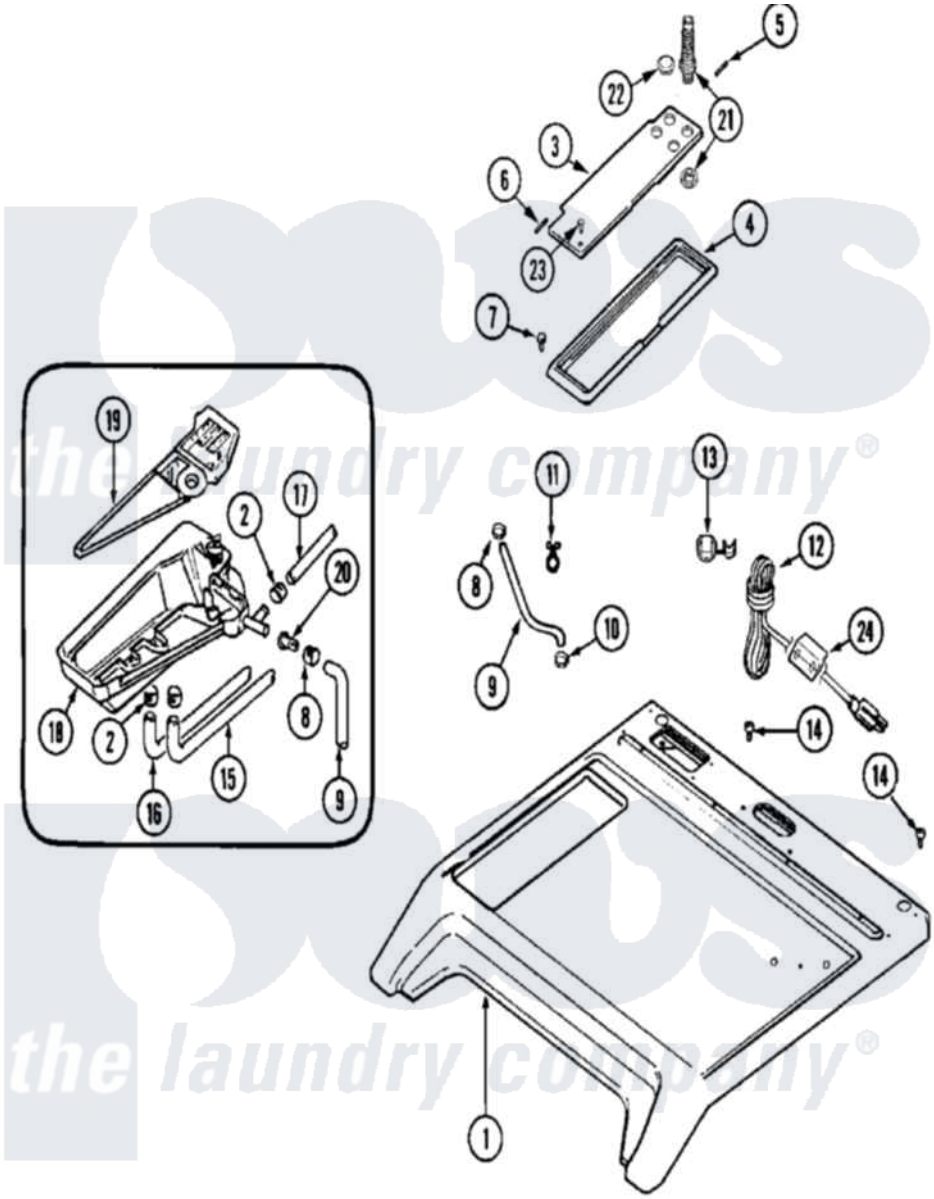

Maytag Commercial Maytag MAH20PDA3W Washer Parts Parts Diagram 03 - TOP
Click on the part number to view part

Item	Original Part Number	Replaced By	Status	Part Description
001	22003586	22004178		Cover, Top
"	NLA		Not Available	COVER, TOP (WHT)
002	205161	489503		Clamp
003	22002909			Lid, Dispenser
004	22002940	22003665		Bezel, Dispenser
005	Y912678	6-912678		Pin- Hinge
006	Y912679			Pin, Hinge
007	22002060	400021-1		Screw
008	205161	489503		Clamp
009	22002556			Screw, Baffle
"	33002193			Hose, Shower
010	201011	285655		Clamp, Hose
011	212276	W10116760		Screw
"	22002027	74007164		Lock- Purs
012	22003045			Cord, Power
013	22003223			Grommet, Cord

014	912365	3370225		Screw
015	22002551			Hose, Bleach
016	22002552			Hose, Fabric Softener----NA
017	22002553			Hose, Detergent
018	12001558			Dispenser Bottom With 4 Clamps
019	22002555			Flume, Dispenser
020	22001900			Preventer, Back Flow
"	W10124350		Not Available	NOT REQUIRED PART OR SEE NOTE
021	22002908			Tube Fitting, Flexible
022	22003057			Plug, Hole
023	22002910	3400806		Screw
024	33002501			Filter, EMI

the laundry company®
the laundry company®
the laundry company®