Maytag MAH21PDCXQ 03 - TOP

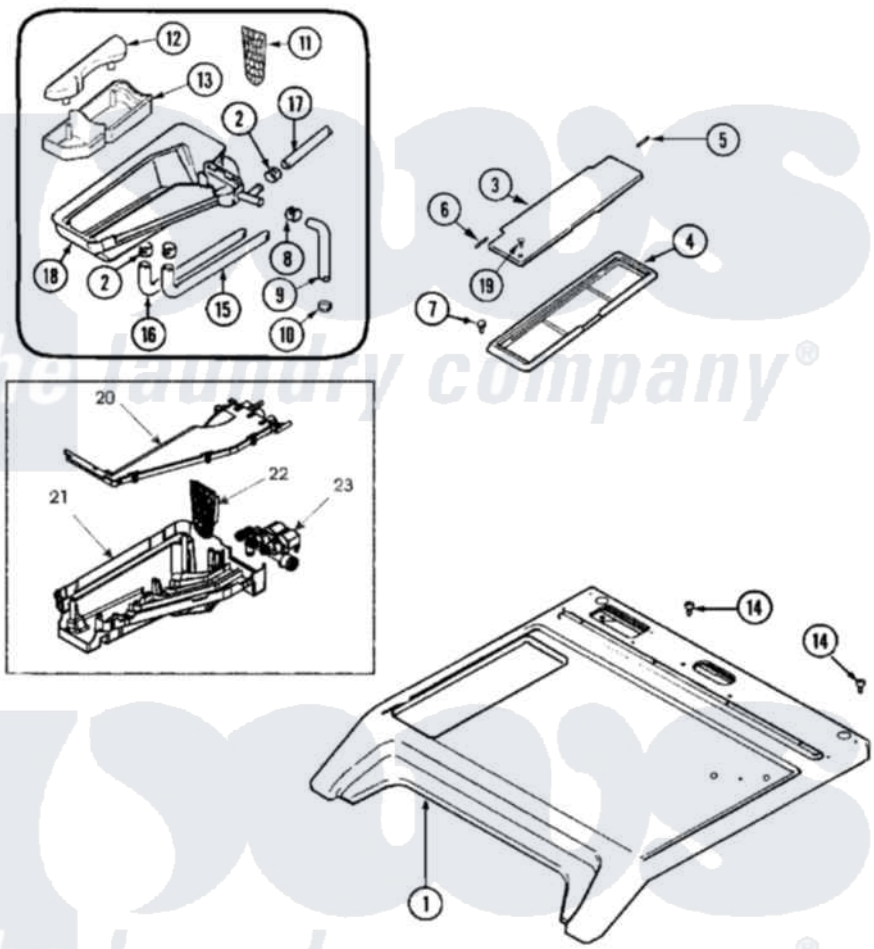

Maytag Commercial Maytag MAH21PDCXQ Washer Parts Parts Diagram 03 - TOP
Click on the part number to view part

Item	Original Part Number	Replaced By	Status	Part Description
001	22003586	22004178		Cover, Top
"	22003587	22004181		Cover, Top
"	22004178			Cover, Top
"	22004179			Cover, Top
002	205161	489503		Clamp
003	22002941			Lid, Dispenser Commercial
004	22003665			Bezel, Dispenser
005	Y912678	6-912678		Pin- Hinge
006	Y912679			Pin, Hinge
007	22002060	400021-1		Screw
008	22001984	285655		Clamp, Hose
009	22003259			Hose, Shower
010	201011	285655		Clamp, Hose
011	22003321			Grid, Dispenser
012	22002266			Cap, Siphon
"	22003849			Siphon Cap

013	22002265		Cup, Siphon
"	22003848		Siphon Cup
014	912365	3370225	Screw
015	22002551		Hose, Bleach
016	22003634		Hose, Fabric Softener
017	22003457		Hose, Detergent
018	22003320		Bottom, Dispenser Assembly
"	22003322		Top, Dispenser
"	22003723		Bottom, Dispenser
019	22003681	22003263	Screw, Sump Cap
020	22003845		Dispenser Cover
021	22003844		Dispenser Bottom
022	22003321		Grid, Dispenser
023	12001929		Valve Seal Kit
"	22001640	285655	Clamp, Hose
"	22003832		Fill Hose, Dispenser
"	22003833		Hose, Tub Shower
"	22003846	12001930	Dispenser Valve Assembly Kit

the laundry company®

the laundry company®