Maytag MAT12PDSAW 07 - BASE

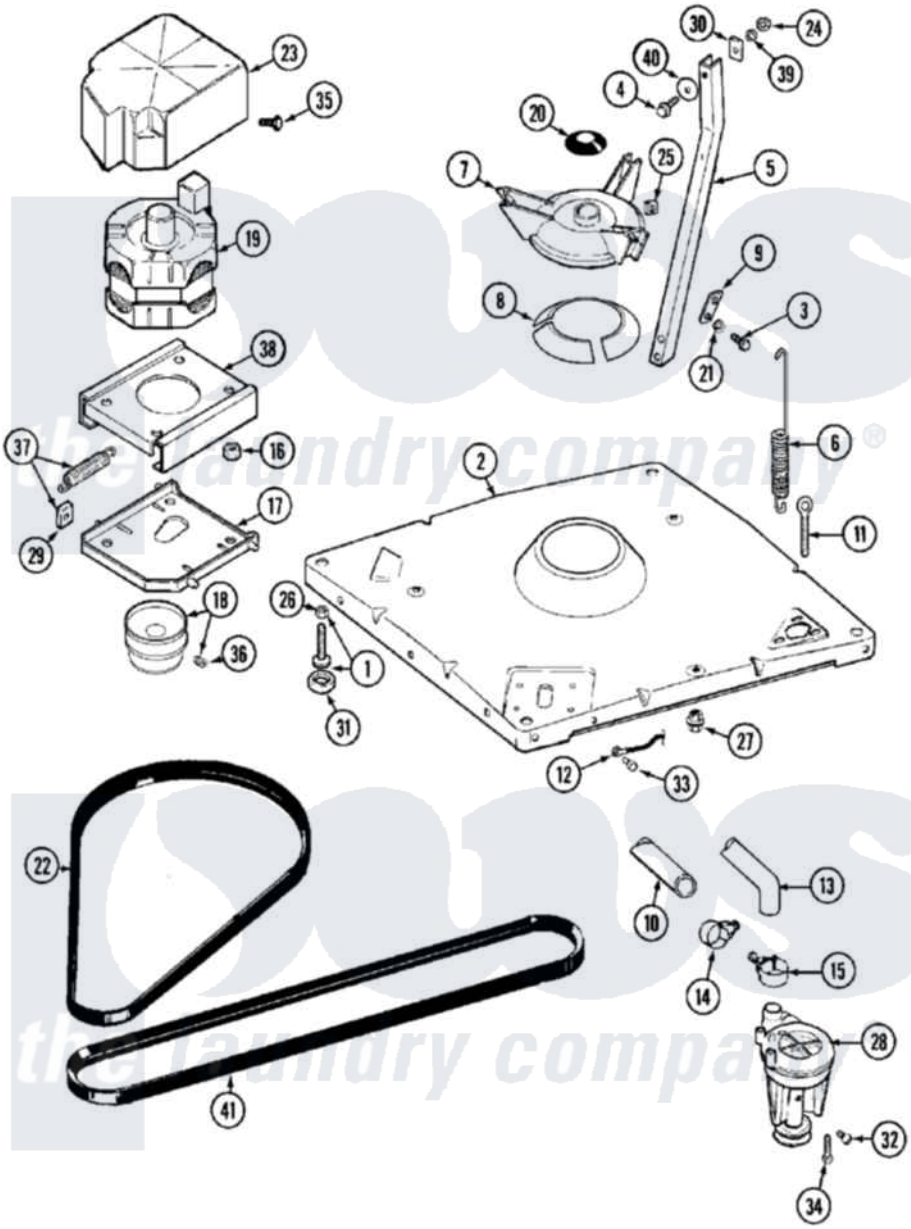

Maytag Commercial Maytag MAT12PDSAW Washer Parts Parts Diagram 07 - BASE
Click on the part number to view part

Item	Original Part Number	Replaced By	Status	Part Description
001	22003428			Leg, Adjustable
002	22002150			Base
003	22004078			Bolt, 5/16
004	200744	W10175939		Bolt
"	205254	W10175938		Bolt
005	213100		Not Available	PART NOT USED
006	22001300			Spring, Centering
007	203725			Damper W/Bolt And Clip
008	203956			Damper Pad Kit
009	213073			Washer, Double Brace
010	22002700	22003410		Hose, Drain
011	216416			Bolt, Eye/Centering Spring
012	901220			Ground Wire
013	Y212989			Hose, Outer Tub To Pump
014	22001640	285655		Clamp, Hose
015	22001640	285655		Clamp, Hose

016	Y311426	3400029		Nut, Adapter Plate
017	22001301			Mount, Motor Lower-Assembly
018	200816	6-2008160		Pulley- MO
019	201805	12002351		Motor-Drve
"	22004301	12002351		Motor-Drve
020	22002954			Deflector, Water
021	911852	486009		Lockwasher
022	211125			V Belt, DriVe Pulley
023	215098			Shield, Motor
024	Y052734			Nut, Carrage Bolts And Bracket
025	Y052785			Nut, Brace To Damper
026	210385			Lock Nut For Adjustable Leg
027	211949			Nut, Adjustment Eyebolt
028	202203	6-2022030		Pump As Pa
029	Y204998	205000		Roller And Spring Kit 4+Spr
030	212979		Not Available	WASHER, TUB BRACE
031	210684			Foot, Adjustable Leg
032	22003235			Screw, Bearing Insert
033	210186	3370225		Screw
034	211880			Screw, HeX Head No.10 X 1/2 Inc
035	213121	3400111		Screw, 12-14 X 5/8
036	Y053241			Set Screw, Motor Pulley
037	205000			Roller And Spring Kit 4+Spr
038	214956			Motor Mount Assembly
039	Y054867			Washer, Lock
040	211100			Washer, Outer Tub
041	211124			Part Not Used

the laundry company®