Maytag MAT25DAAAW 07 - TRANSMISSION

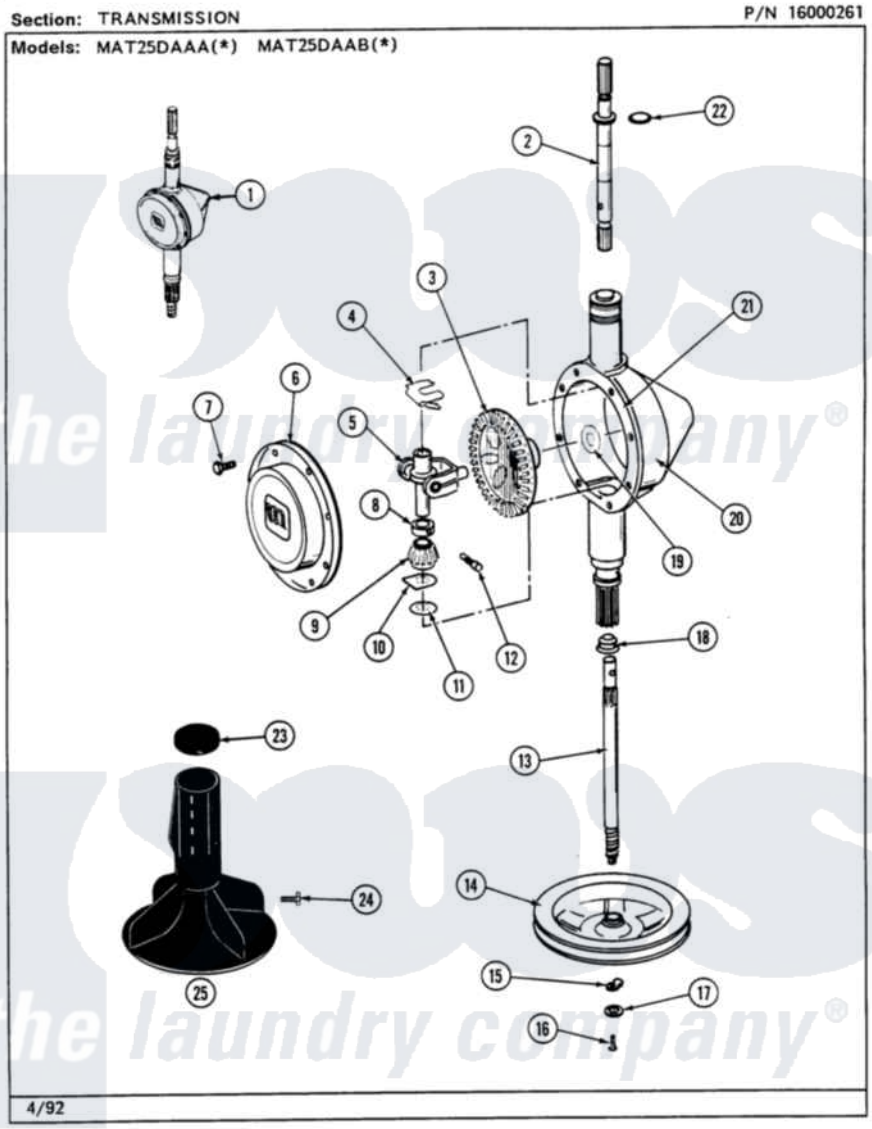

Maytag Commercial Maytag MAT25DAAAW Washer Parts Parts Diagram 07 - TRANSMISSION
Click on the part number to view part

Item	Original Part Number	Replaced By	Status	Part Description
001	206708	6-2097790		Transmison
002	207153	6-2097820		Kit- Shaft
003	206713	6-2067130		Gear- Beve
004	215581			Spring, Agitator Shaft
005	206685	6-2066850		Yoke
006	206628			Cover, Transmission
007	215417		Not Available	SCREW, TRANSMISSION COVER
008	215415		Not Available	COLLAR, LOWER
009	215401	W10221114		Pinion
010	215395			Plate, Clutch
011	211483	6-2114830		Washer- SP
012	Y206629			Pin, Collar
013	NLA		Not Available	SHAFT, CENTER
014	211059	6-2301530		Pulley
015	211089			Lug, Stop Pulley
016	211375	681582		Screw

017	211090	22003555		Washer, Stop Lug
018	206602	207843		Lip Seal Repair Kit
019	215394			Washer, Bevel Gear
020	206625	6-2097790		Transmison
021	Y058700	675652		Adhesive
022	210690			Seal, Rubber
023	215532			Cap, Agitator
024	206478		Not Available	SCREW & WASHER FOR AGITATOR
025	207119	207228		Agitator W/Lock Screw

the laundry company®
the laundry company®
the laundry company®