Maytag MDE13CSAKL 08 - MOTOR DRIVE

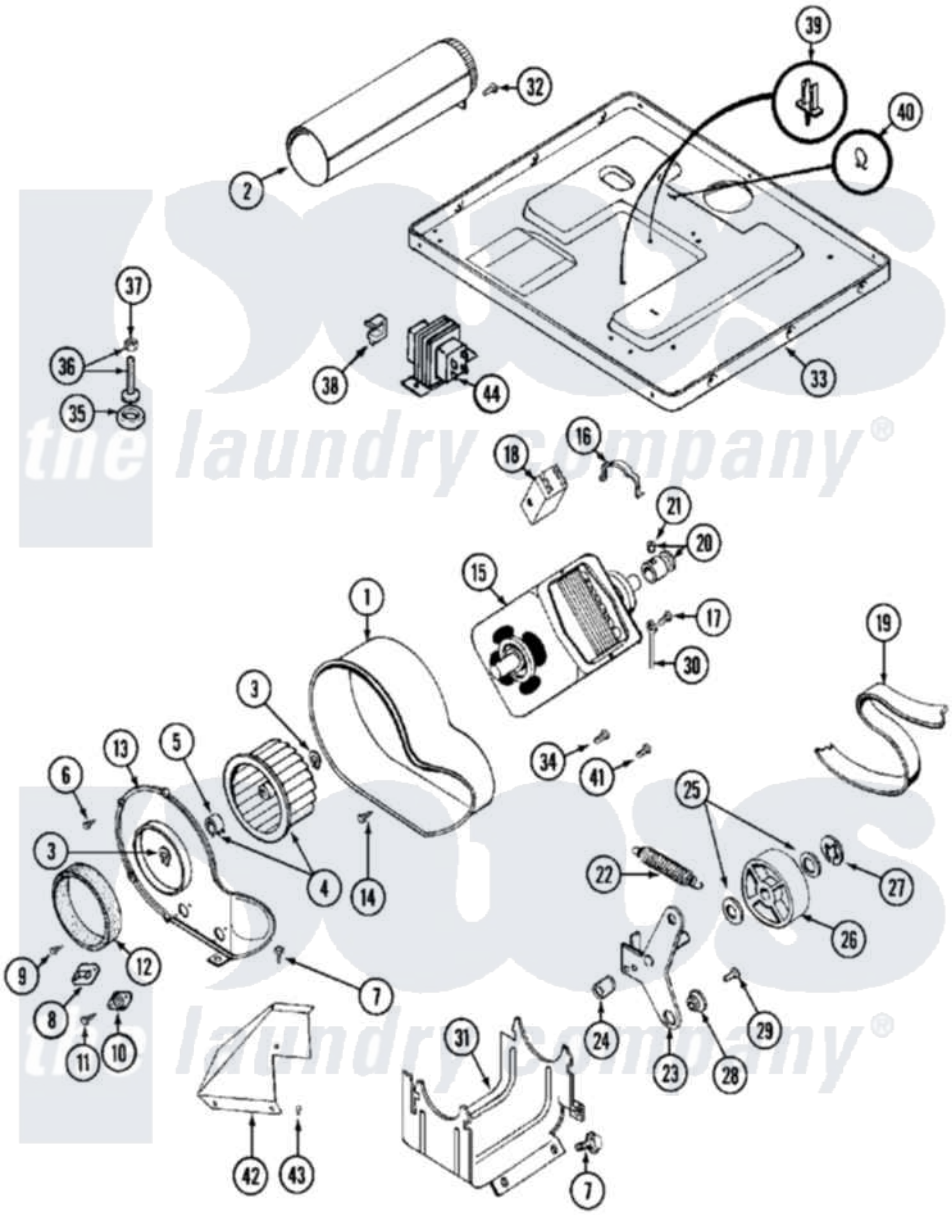

Maytag Commercial Maytag MDE13CSAKL Dryer Parts Parts Diagram 08 - MOTOR DRIVE
Click on the part number to view part

Item	Original Part Number	Replaced By	Status	Part Description
001	Y312893			Housing, Blower
002	Y303442			EXHAUST DUCT ASSEMBLY
003	410233	9703438		Ring-Retnr
004	Y303836			Blower Wheel Assembly And Clamp
005	312967			Clamp, Blower Housing
006	Y312961	W10116751		Screw
007	Y313561			Screw----NA
008	303392			Thermostat, Cycling
"	306966			Thermostat, Multi-Temp Part Not Used Mdg26ct-MN Only
"	306967			Thermostat, Multi-Temp Part Not Used Mde26ct-MN Only
"	33001306			Wire Harness, Thermostats
"	Y303225			Thermostat, Permanent Press
009	211294	90767		Screw, 8A X 3/8 HeX Washer Head Tapping
010	306604			Cut-Off, Thermal Part Not

010	306604			Used
011	NLA		Not Available	SCREW, THERMAL CUT-OFF
012	Y312901			Seal, Housing Cover
013	314847			COVER, BLOWER HOUSING
014	314818	1163839		Screw
015	Y304656		Not Available	MOTOR (240V 50HZ)
016	Y015825			Clip, Motor To Motor Support
017	910343	488234		Screw 8-32 X 1/4
018	306207		Not Available	(PROD. No.303358-8 & No.303358-9)
"	NLA		Not Available	SWITCH, MOTOR EXTERNAL START
"	Y303877		Not Available	SWITCH, MOTOR EXTERNAL START No.303358-2, No.303358-4, 303358-7
"	Y303879			Switch, Motor External Start
019	Y312959			Poly "V" Belt For Tumbler
020	305186			Pulley, Motor
021	Y053241			Set Screw, Motor Pulley
022	Y303945			IDLER SPRING ASSY. W/PLUG
023	Y303363	6-3033630		Idler Arm
024	Y313582	W10116756		Spacer
025	Y312527			Washer, Idler Shaft
026	Y303705	6-3037050		Pulley- ID
027	312958	354987		Ring, Retaining
028	Y312894	315772		Sleeve, Idler Arm
029	Y014874			Screw, Idler Arm And Sleeve
030	901220			Ground Wire
031	NLA		Not Available	SUPPORT, MOTOR
032	Y310632	1163839		Screw
033	306530		Not Available	BASE ASSEMBLY (LOWER)
"	Y307482		Not Available	BASE ASSY. (UPPER & LOWER)
034	211294	90767		Screw, 8A X 3/8 HeX Washer Head Tapping
035	210684			Foot, Adjustable Leg
036	Y302699	22003428		Leg, Adjustable
037	210385			Lock Nut For Adjustable Leg
038	Y310376			Clip, Door Switch Harness
039	315471	22003298		Retainer, Wire
040	410490			Spring, Retainer Wire Harness
041	Y312961	W10116751		Screw
042	315122		Not Available	COVER, THERMOSTAT PART NOT USED (MDE ONLY)
043	Y310632	1163839		Screw
044	307928	12001933		Transformer
"	Y313559			Screw

the laundry company®