# Maytag MDE16PRAGW 03 - DOOR

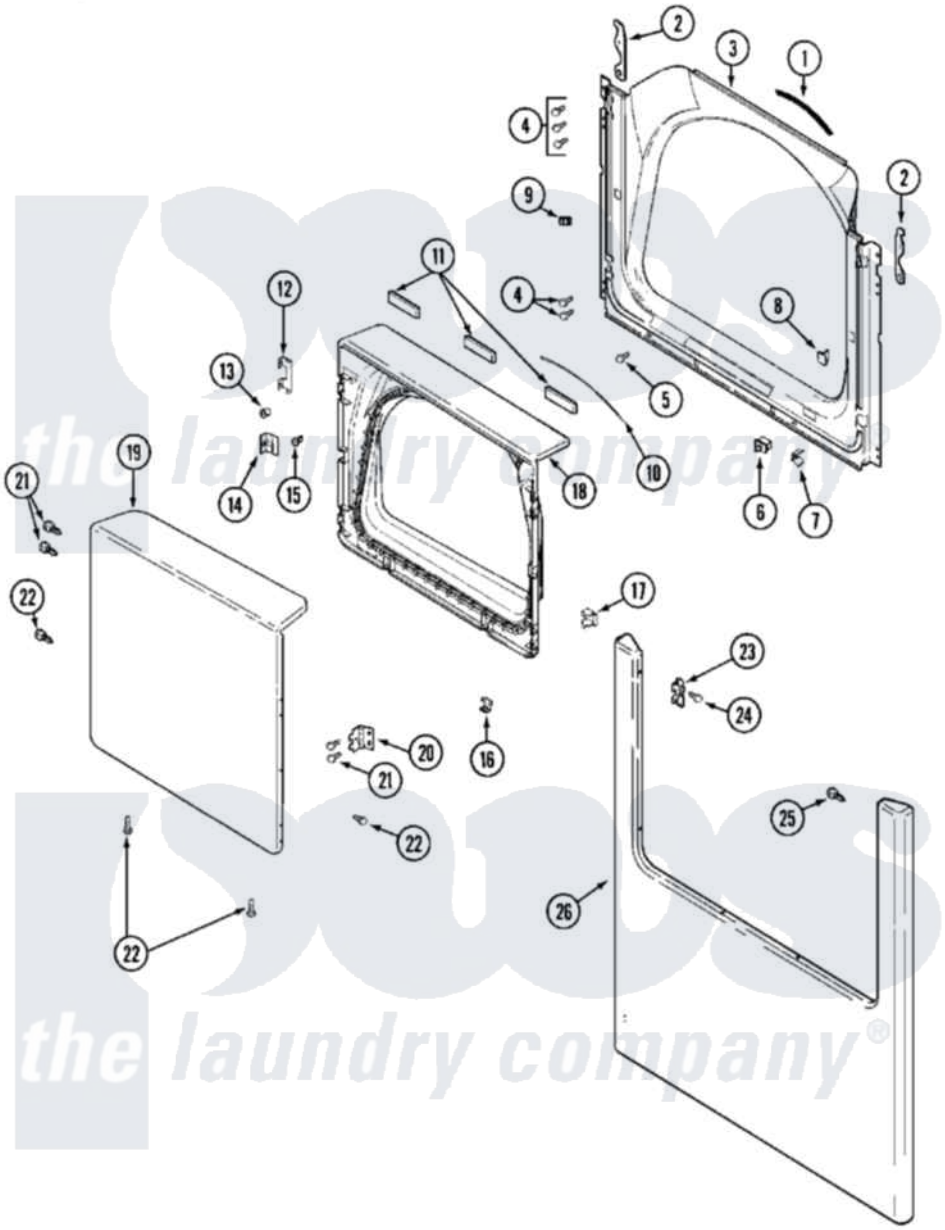

Maytag Commercial Maytag MDE16PRAGW Dryer Parts Parts Diagram 03 - DOOR
Click on the part number to view part

| Item | Original Part Number | Replaced By | Status | Part Description |
|---|---|---|---|---|
| 001 | 33001767 | | | Seal, Shroud |
| 002 | 22002247 | 33002597 | | Hook, Security |
| 003 | 33001900 | | | Shroud |
| 004 | 22001995 | | | Screw Note: Screw, Tumbler Front And Shroud |
| 005 | 33001768 | | | Screw, Shroud Note: Screw, Shroud And Outlet Duct |
| 006 | 33001509 | W10169313 | | Switch-Dor |
| " | 33002664 | 33002166 | | Switch, Door |
| 007 | 33001760 | | | Bracket, Hinge |
| 008 | NLA | | Not Available | PLUG, DOOR CATCH |
| 009 | Y304578 | LA-1003 | | Door Catch Kit |
| 010 | 33002094 | | | Seal, Door |
| 011 | 33001268 | | Not Available | PAD, DOOR |
| 012 | 22002038 | | | Clip, Door |
| 013 | 33001771 | | | Bushing, Inner Door |
| 014 | 33001793 | | | Bracket, Strike |

| | | | |
|---|---|---|---|
| 015 | 33001761 | | Strike, Door |
| 016 | 22002039 | | Clip, Door |
| 017 | 33001763 | | Plug, Inner Door |
| 018 | 22002039 | | Clip, Door |
| " | 22002063 | | Screw No.8-18AB Wafer Head |
| " | 33001899 | | Door, Inner |
| 019 | 33001904 | | Door, Outer |
| 020 | 33001759 | | Hinge, Door |
| 021 | 22002062 | 98006631 | Screw |
| 022 | 22002063 | | Screw No.8-18AB Wafer Head |
| 023 | 33001764 | | Cover, Hinge Hole |
| 024 | 33001846 | | Screw, Hinge Hole Cover |
| 025 | 22002243 | | Screw, Front Panel And Hinge |
| " | 22002244 | | Clip, Grounding |
| 026 | 213280 | 204439 | Screw And Fstner Assembly |
| " | 22002239 | | Clip, Front Panel |
| " | 33001901 | | Panel, Front |

the laundry company®

the laundry company®