Maytag MDG14PDSAW 01 - CONTROL PANEL

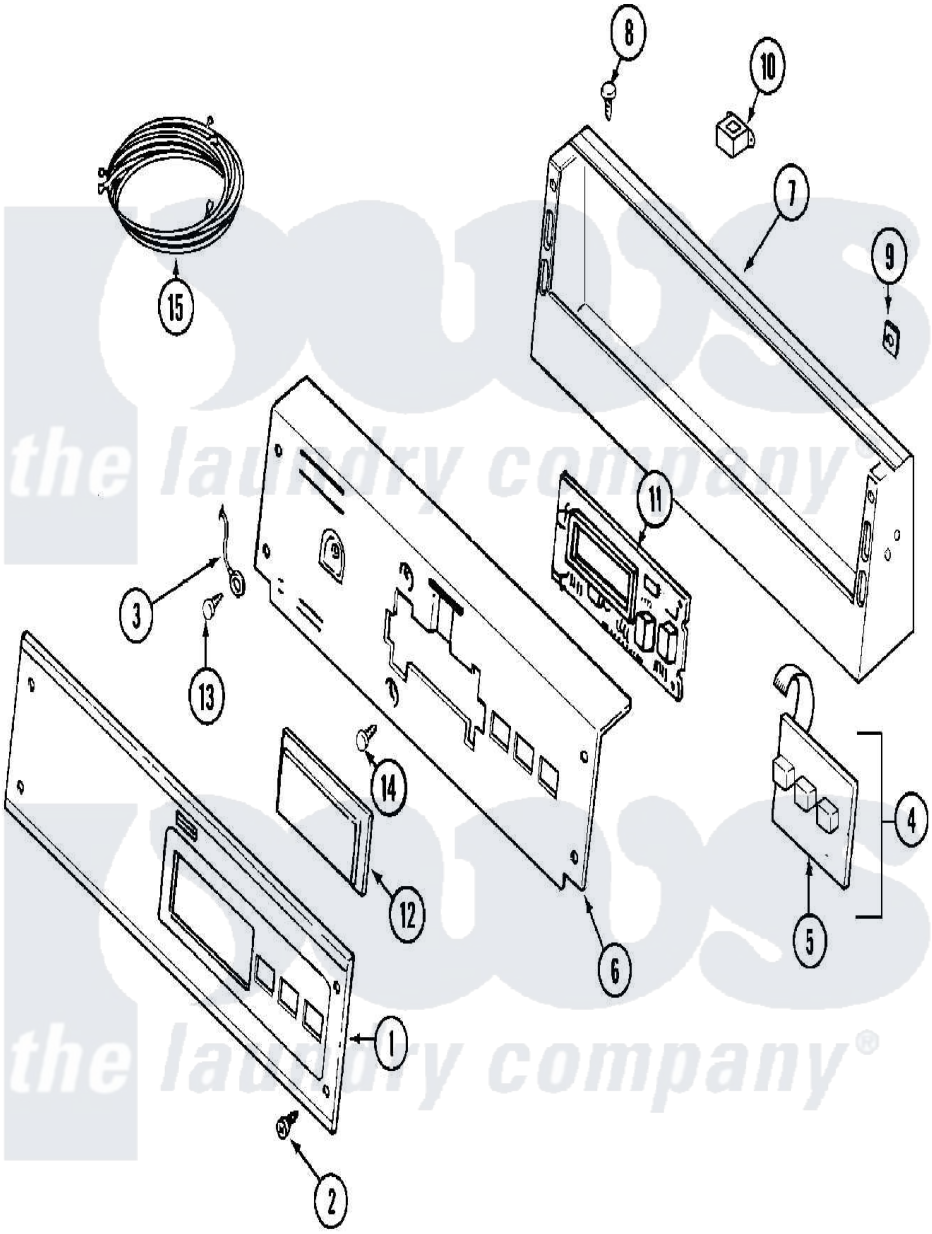

Maytag Commercial Maytag MDG14PDSAW Dryer Parts Parts Diagram 01 - CONTROL PANEL
Click on the part number to view part

Item	Original Part Number	Replaced By	Status	Part Description
001	33001784	33002941		Facia - Pd/Ps
002	215506			Screw, Control Panel Overlay
003	22001959			Wire, Ground
004	215527	W10140652		Screw, 6-20 X 1/2
"	33002165			Backup Plate W/Switch Assembly
005	215517	W10131113		Push Button
006	22001511	22002954		Deflector, Water
"	33001785			Bracket, Back
"	33002519			Bracket, Back
007	22002329			Console
"	22003089			Console
008	22001996	3370225		Screw
009	215003			Fastener, Panel And Bracket
010	211251			Screw, Transformer
"	22001419			Nut, Transformer
"	22002139			Transformer

011	33001204		Stand-Off, Ccontrol Board
"	33001746	W10130081	Control Board
"	912077		Locknut, Reader Harness
012	22001962	W10131114	Cover, Display
013	211252		Screw, Ground Wire
014	215526		Screw, Circuit Board
015	33001973		Wire Harness, Main
"	33002168		Wire Harness, Main

the laundry company®
the laundry company®
the laundry company®