Maytag MDG26MNAAL 03 - CONTROL PANEL (MN)

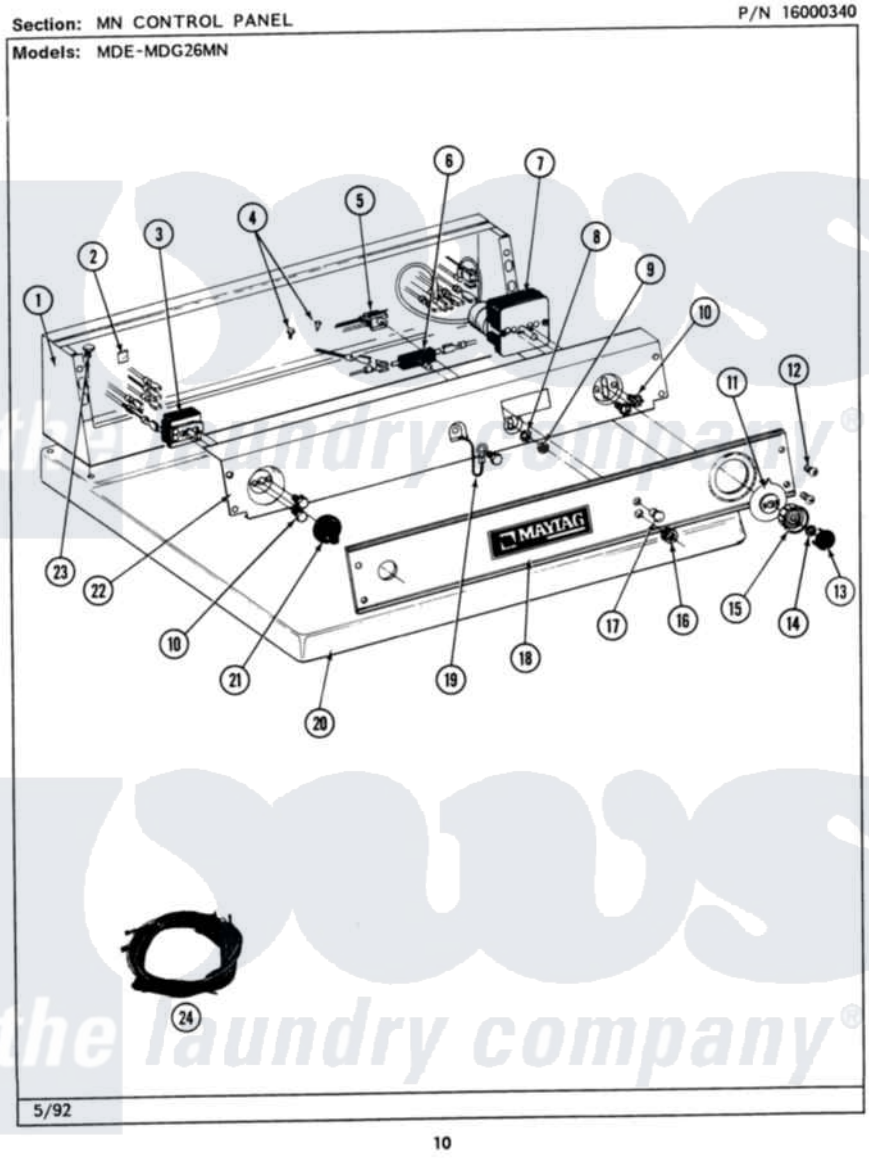

Maytag Commercial Maytag MDG26MNAAL Dryer Parts Parts Diagram 03 - CONTROL PANEL (MN)
Click on the part number to view part

Item	Original Part Number	Replaced By	Status	Part Description
001	NLA		Not Available	CONSOLE (WHT)
002	215003			Fastener, Panel And Bracket
003	307237	W10327105		Switch, Cycle Selection
004	211294	90767		Screw, 8A X 3/8 HeX Washer Head Tapping
"	Y314322	211251		Screw, Transformer
005	204075		Not Available	PILOT LAMP (DG MODELS ONLY)
006	306940	W10149462		Switch, Push-To-Start
007	305214			Timer
"	Y304585			Timer Motor RPR For 305214 Timer Only
008	312751			Lockwasher, Start Switch
009	Y312706	422617		Nut
010	Y313588	488234		Screw 8-32 X 1/4
011	314725	33001500		Dial, Timer Indicator
012	212277			Screw, No.8 X 1/2 Inch

013	314723	W10133501		Cap, Knob
014	312273			Nut, Control Knob
015	314724			Knob For Timer
016	Y312702			Knurled Nut, Start Switch
017	215564			Lens, Indicator Light
018	314909	33001021		Panel, Control
019	205810			Wire, Ground
"	211252			Screw, Ground Wire
020	307104			Top Cover Assembly
"	NLA		Not Available	(ALM)
021	306938			Knob, Selector Switch
022	NLA		Not Available	BACK UP PLATE (WHT)
023	212276	W10116760		Screw
024	308510			Wire Harness, Main
"	NLA		Not Available	WIRE HARNESS

the laundry company®
the laundry company®
the laundry company®