Maytag MFR18MCAAS 14 - SOAP BOX & TOP COVER ASSY. (SERIES 11)

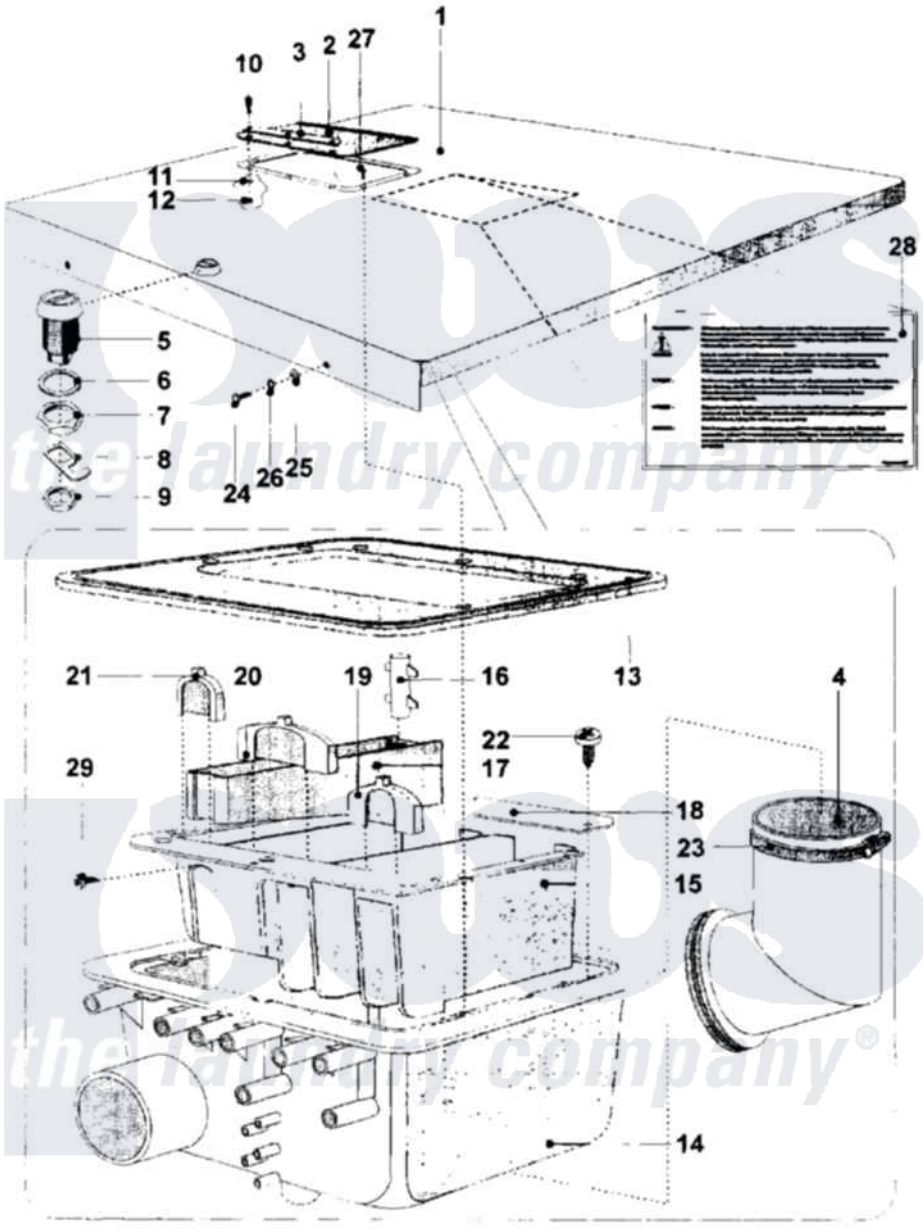

Maytag Commercial Maytag MFR18MCAAS Washer Parts Parts Diagram 14 - SOAP BOX & TOP COVER ASSY. (SERIES 11)
Click on the part number to view part

Item	Original Part Number	Replaced By	Status	Part Description
001	23003315			Cover, Soap Hopper
002	23001003			Rubber Cover, Soap Box
003	23002893			Lath, Rubber Cover Soap Hopper
004	23001005			Rubber Hose, Soap Box
005	23001006			Lock, Top Panel
006	23001007			Washer M21x27x1
007	23001008			Nut, Lock
008	23001009			Hook, Lock
009	23001011			Nut
010	23001012			Screw
011	23001636	23002674		Spring, Lock Washer
012	23002652			Nut
013	23001015			Rubber Seal, Soap Box
014	23001016			External Soap Hopper
015	23001017			Soap Hopper Insert

016	23001018			Syphon Hose
017	23001019			Fabric Softner Insert
018	23001020			Insert Retainer
019	23001021			Prewash Diverter
020	23001022			Mainwash Diverter
021	23001021			Prewash Diverter
022	23001024	23003782		Screw 3 Stainless Steel Lu
023	23001025			Clamp, Hose
024	23002461			Screw
025	23001027			Washer
026	23001734	23002425		Locker Washer M6
027	23002894	23003484		Screw
028	NLA		Not Available	LABEL (SERV. WARNING)
029	23002318			Screw, Pan Head

the laundry company®
the laundry company®
the laundry company®