Maytag MFR18MCAAS 24 - BASE FRAME (SERIES 11)

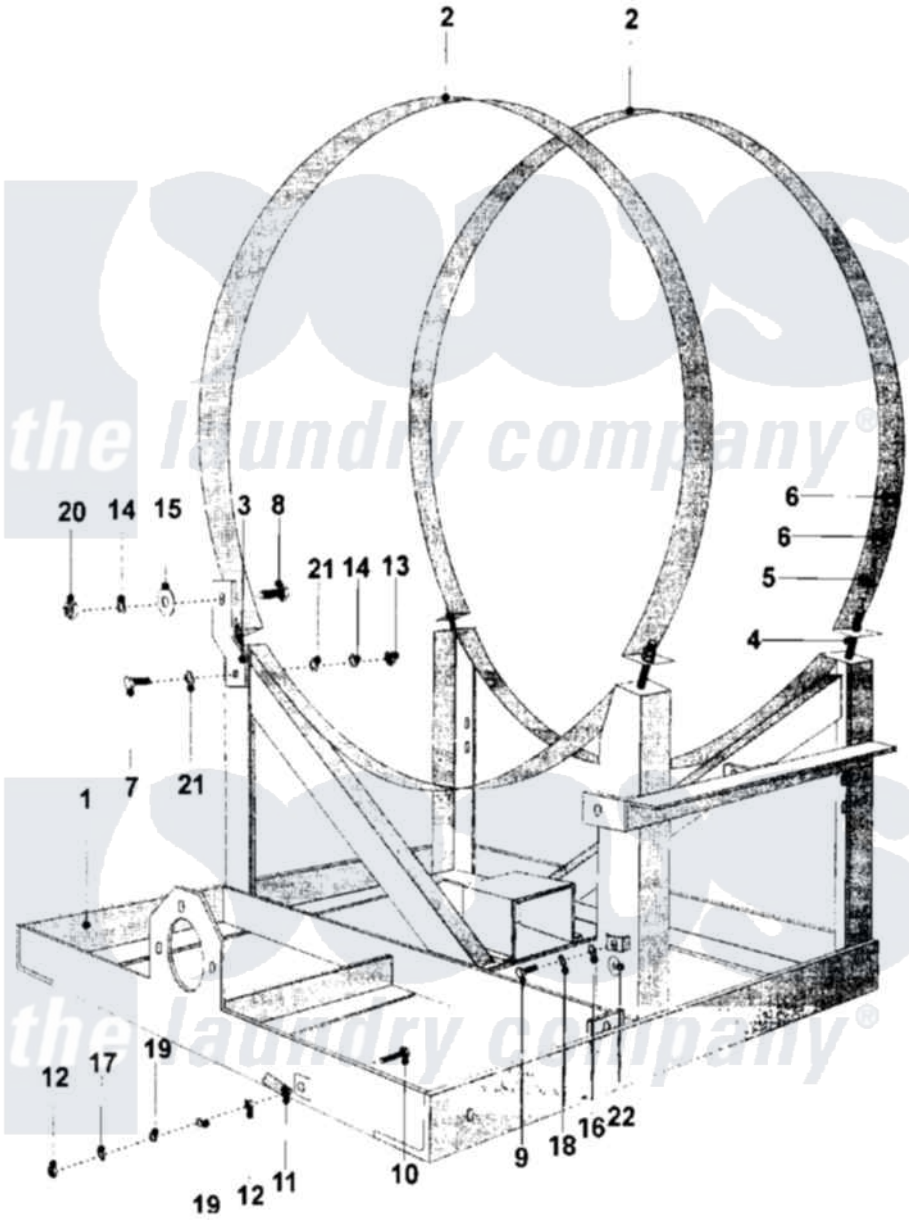

Maytag Commercial Maytag MFR18MCAAS Washer Parts Parts Diagram 24 - BASE FRAME (SERIES 11)
Click on the part number to view part

Item	Original Part Number	Replaced By	Status	Part Description
001	23003281	23003763		Frame
002	NLA		Not Available	CLAMP, TUB
003	NLA		Not Available	BRACE, TUB SUPPORT
004	23003285			Bolt
005	23002654			Washer
006	23001661			Nut M10
007	23001304	23003765		Bolt M8x35
008	23002847	23001205		Bolt
009	23002462			Screw Lu
010	23002806			Screw
011	23001308			Hardware, Grounding
012	23001515	23001312		Mut M6
013	23002435	23001266		Nut M8
014	23002358			LOCK WASHER M8
015	NLA		Not Available	WASHER (DIA. 30 X 8.5 X 2.5)
016	23001159			Washer Lu

017	23001734	23002425		Locker Washer M6
018	23001158			Lockwasher
019	23001313	23003767		Washer Brass
020	23002435	23001266		Nut M8
021	23001203			Washer
022	NLA		Not Available	PLATE, INDEX

the laundry company®
the laundry company®
the laundry company®