Maytag MFR18MCAVS 01 - SOAP BOX & TOP COVER ASSY (SERIES 10)

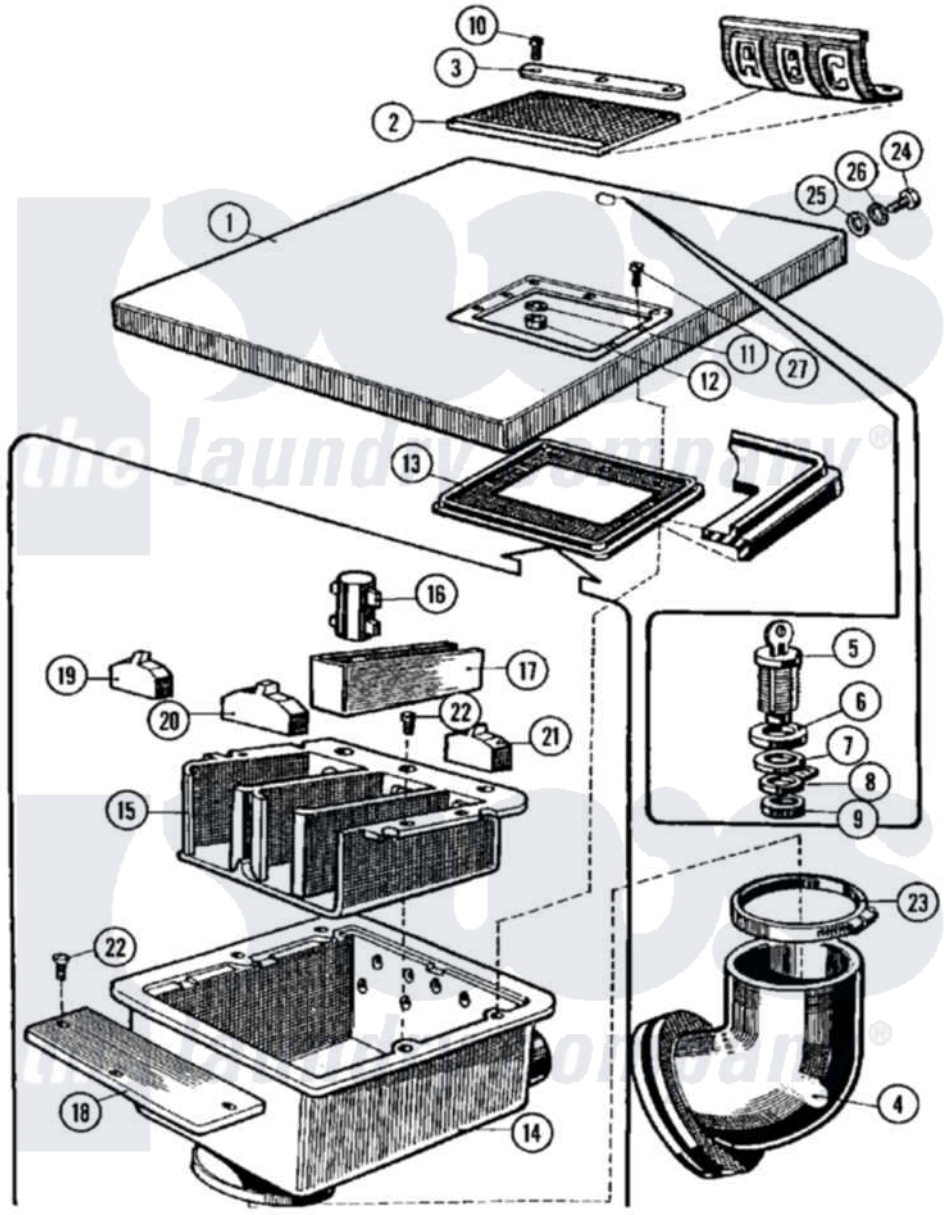

Maytag Commercial Maytag MFR18MCAVS Washer Parts Parts Diagram 01 - SOAP BOX & TOP COVER ASSY (SERIES 10)
Click on the part number to view part

Item	Original Part Number	Replaced By	Status	Part Description
001	NLA		Not Available	COVER, TOP (STNLS)
002	23001003			Rubber Cover, Soap Box
003	23001004			Clamp, Soap Box Cover
004	23001005			Rubber Hose, Soap Box
005	23001006			Lock, Top Panel
"	23002673			Key-Top Panel
006	23001007			Washer M21x27x1
007	23001008			Nut, Lock
008	23001009			Hook, Lock
009	23001011			Nut
010	23001012			Screw
011	23001636	23002674		Spring, Lock Washer
012	23001014			Nut M4
013	23001015			Rubber Seal, Soap Box
014	23001016			External Soap Hopper
015	23001017			Soap Hopper Insert

016	23001018		Syphon Hose
017	23001019		Fabric Softner Insert
018	23001020		Insert Retainer
019	23001021		Prewash Diverter
"	23002318		Screw, Pan Head
020	23001022		Mainwash Diverter
021	23001023		Fabric Softner Diverter
022	23001024	23003782	Screw 3 Stainless Steel Lu
023	23001025		Clamp, Hose
024	23001026		Bolt
025	23001027		Washer
026	23001028	23002756	Lockwasher
027	23001029	23003484	Screw
028	23001550		Sticker, Service Warning

the laundry company®
the laundry company®
the laundry company®