Maytag MFR25PCATS 03 - CONTROL PANEL-PC (SERIES 10)

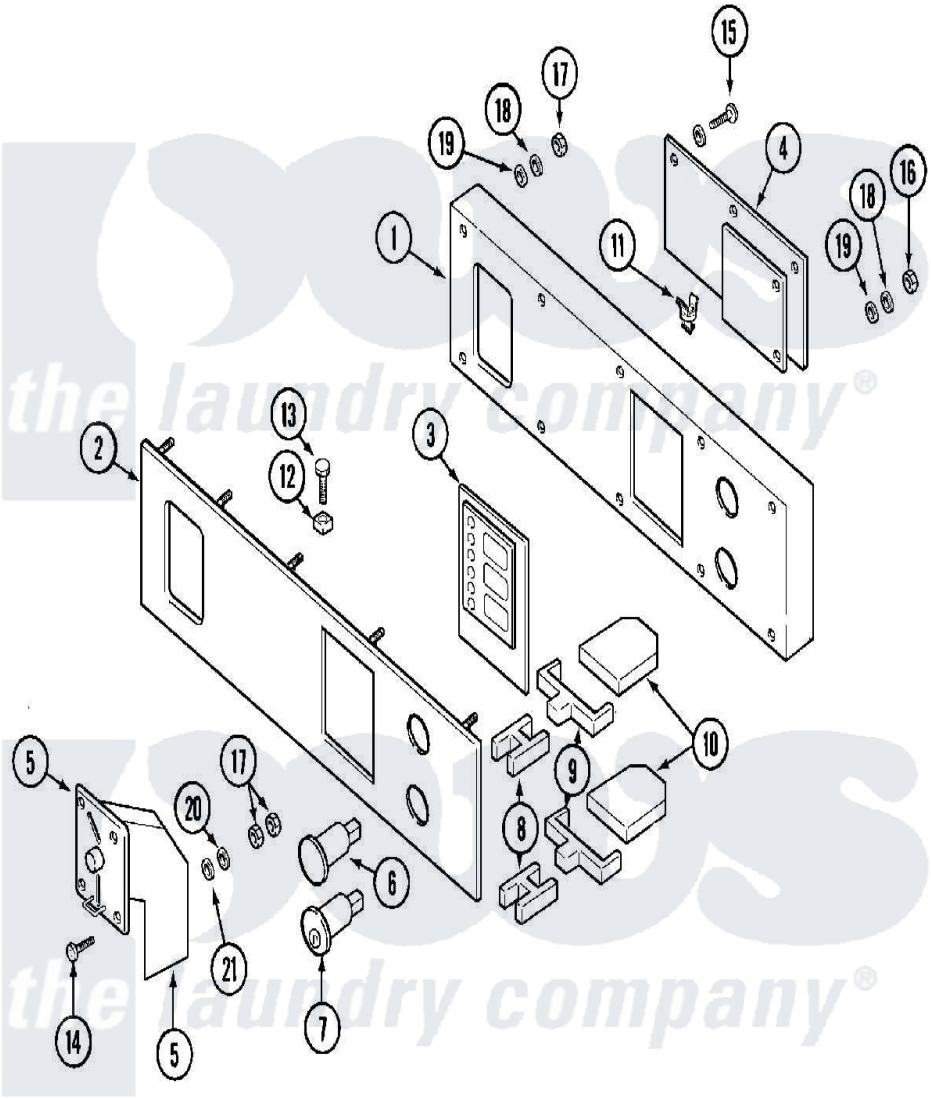

Maytag Commercial Maytag MFR25PCATS Washer Parts Parts Diagram 03 - CONTROL PANEL-PC (SERIES 10)
Click on the part number to view part

Item	Original Part Number	Replaced By	Status	Part Description
001	NLA		Not Available	PLATE, BACK-UP
002	NLA		Not Available	PANEL, CONTROL
003	23001526			Plexi, Microprocessor
004	23001525			Microprocessor
"	23003741			Controller, Apl283a V1.07
005	23001063			Meter, Coin
"	23001350			Meter, Coin
006	23001537	12001897		Kit- Key S
007	23001538	12001896		Kit- Key S
008	NLA		Not Available	PART, CONNECTION
009	23001540			Adapter, Contact Block
010	23001541			Block, Contact
011	23001542			Holder, Board
012	23001339	23002455		Nut, Rapid
013	NLA		Not Available	BOLT
014	23001064			Screw, Ornamental

015	23001544			Bolt
016	23001055	23001014		Nut M4
017	23001053			Nut
018	23001013			Lock Washer External Teeth M4
019	23001545	23002504		Washer M4
020	23001054			Washer, Locking
021	23001670			Washer
022	NLA		Not Available	LABEL, EARTH

the laundry company®
the laundry company®
the laundry company®