Maytag MFR25PCATS 17 - MAIN CONTROL (SERIES 11)

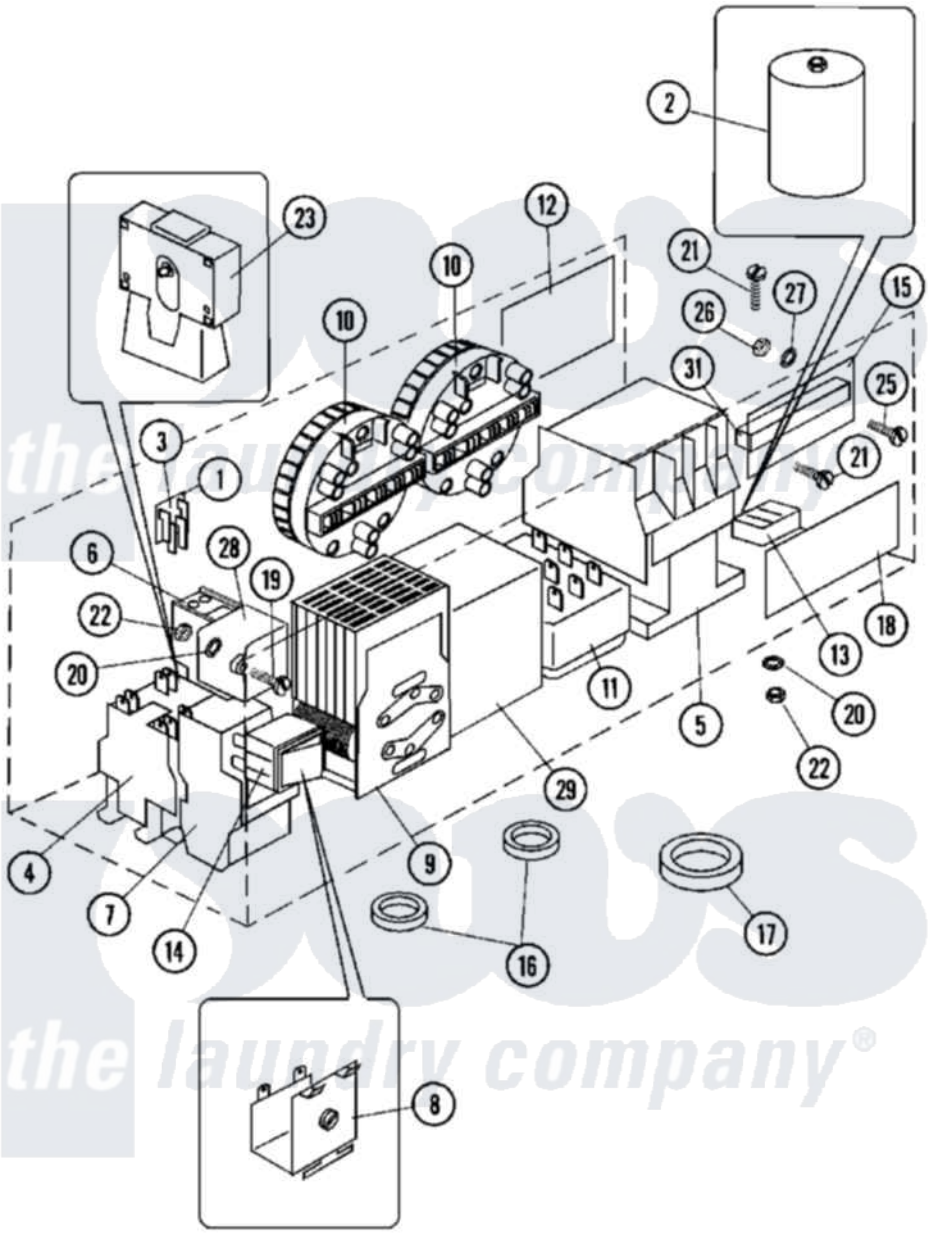

Maytag Commercial Maytag MFR25PCATS Washer Parts Parts Diagram 17 - MAIN CONTROL (SERIES 11)
Click on the part number to view part

Item	Original Part Number	Replaced By	Status	Part Description
001	23001094			Bridge, Rectifier
002	23001096			Capacitor
"	23001097			Capacitor
"	23001098			Capacitor
"	23001357			Capacitor
"	23001358			Capacitor
003	23001099			Socket, Pc Board Socket
004	23001100	23003750		Frequency Inverter Contactor
"	23001101	23003751		Contactor Lc1 D12
"	23001547			Contactor
"	23003750			Frequency Inverter Contactor
"	23003751			Contactor Lc1 D12
005	23001102			Contactor
"	23001103			Contactor
006	23001104			Auxiliary Contact
007	23001106			Relay, Thermal Overload

"	23001108			Relay, Thermal Overload
"	23001359			Relay, Thermal Overload
"	23002101	23003757		Overload Relay 5.5-8A
"	23003755			Overload Relay LR2D
"	23003756			Overload Relay 4-6a
"	23003757			Overload Relay 5.5-8A
"	23003758			Overload Relay LR2D
009	23001110			Timer, Reversing
010	23001360	23001513		Switch, Water Level
"	23001513			Switch, Water Level
"	23003333			Switch, Water Level
011	23002460			Thermostat
014	23001114			Rocker Switch, Prewash/No Prew
015	23001115			Terminal Block Insulation
017	23001117			Ring, Rubber
018	23001118			Sticker, Liquid Soap
019	23002423	23001361		Bolt
020	23002111	23001013		Lock Washer External Teeth M4
021	23002398	23001089		Screw
022	23002399	23001014		Nut M4
023	23001119	23003762		Mechanical Interlock
"	23003762			Mechanical Interlock
024	23002952	23001069		Screw
025	23002806			Screw
026	23001515	23001312		Mut M6
027	23001734	23002425		Locker Washer M6
028	NLA		Not Available	NET FILTER
029	23002348	23003734		Transformer
030	23002959			Electric Heat Terminal Board
032	23001465			Sticker, Electricity Warning
033	23002955			Buzzer
034	NLA		Not Available	STICKER
035	NLA		Not Available	LABEL, EARTH
036	23001138			Bushing, Cable Passage
037	23002154			Housing, Connector