Maytag MFR50PDCTS 06 - SOAP BOX, DRAIN & HOSE ASSEMBLY

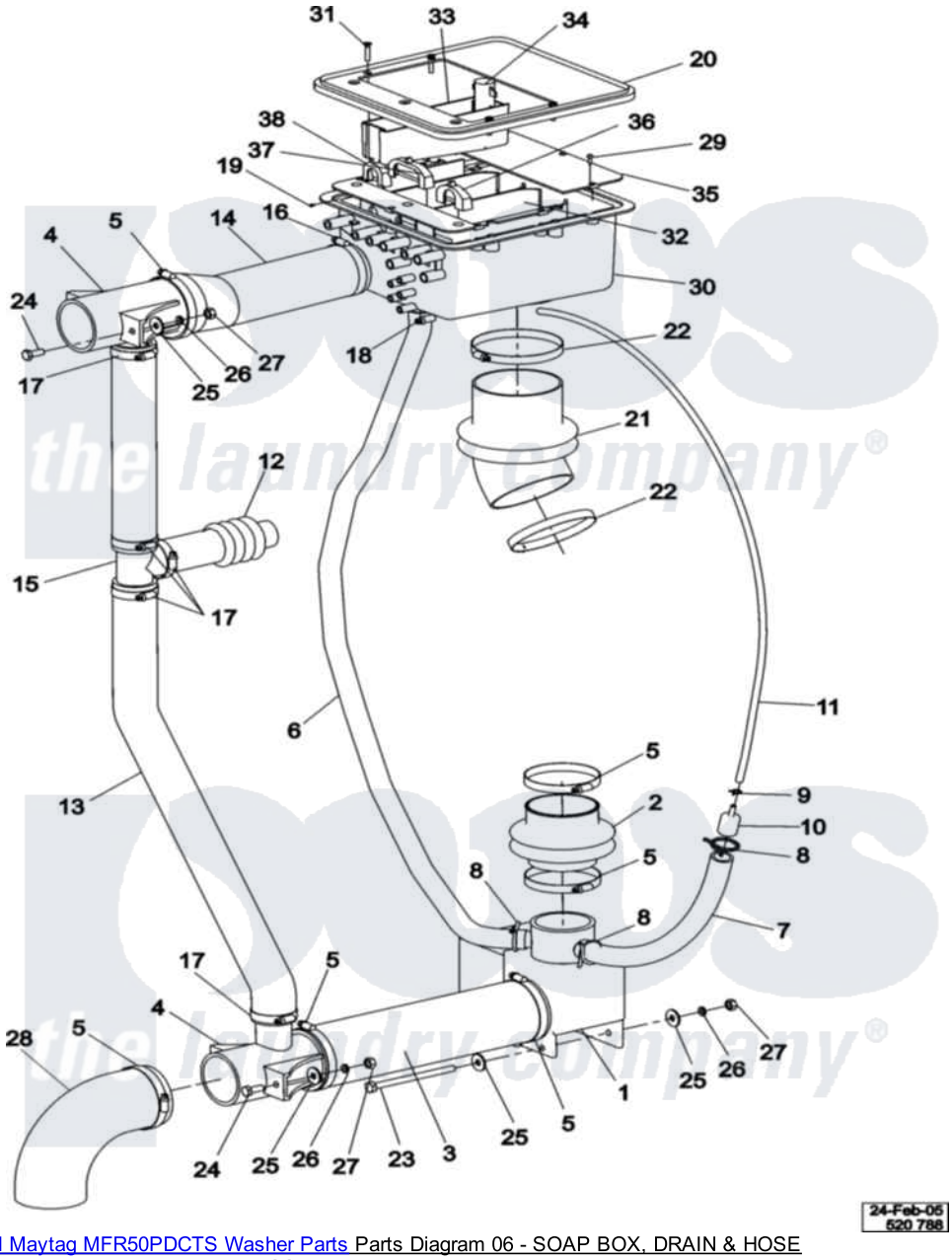

Maytag Commercial Maytag MFR50PDCTS Washer Parts Parts Diagram 06 - SOAP BOX, DRAIN & HOSE ASSEMBLY
Click on the part number to view part

Item	Original Part Number	Replaced By	Status	Part Description
001	23001244			Valve, Drain
002	23002907	23001245		Tub To Drain Hose
003	23001248			Hose, Drain
004	23001253			Tee, Drain
005	23001258	696392		Hose Clamp
006	23001246			Lower Pressure Switch Hose
007	23001246			Lower Pressure Switch Hose
008	23001259			Clamp, Corbin
009	23001257	596669		Clamp, Manifold
010	23001260			Pressure Switch Hose Fitting
011	23001252			Upper Pressure Switch Hose
012	23001250			Corregated Vent Hose
013	23001251			Lower Overflow Hose
014	23001254	23004241		Hopper To T-Hose
015	23001255			Tee, Overflow Hose
016	23001256	34001289		Clamp, Hose

017	23001750			Ring, Clamp
018	23001262	616099		Clamp
019	23003783			Screw 2
020	23001015			Rubber Seal, Soap Box
021	23004187			Rubber, Tub Soap Hopper
022	23001025			Clamp, Hose
023	23002908			Screw
024	23002475	23001264		Bolt M8x20
025	23002437			Washer M8
026	23002439	23001265		Washer
027	NLA		Not Available	NUT M8
028	23002015			Elbow
029	23003782			Screw 3 Stainless Steel Lu
030	23001016			External Soap Hopper
031	23003484			Screw
032	23001017			Soap Hopper Insert
033	23001019			Fabric Softner Insert
034	23001018			Syphon Hose
035	23001020			Insert Retainer
036	23001021			Prewash Diverter
037	23001022			Mainwash Diverter
038	23001023			Fabric Softner Diverter

the laundry company®
the laundry company®