Maytag MFR60PNCTS 02 - CABINET (PN)

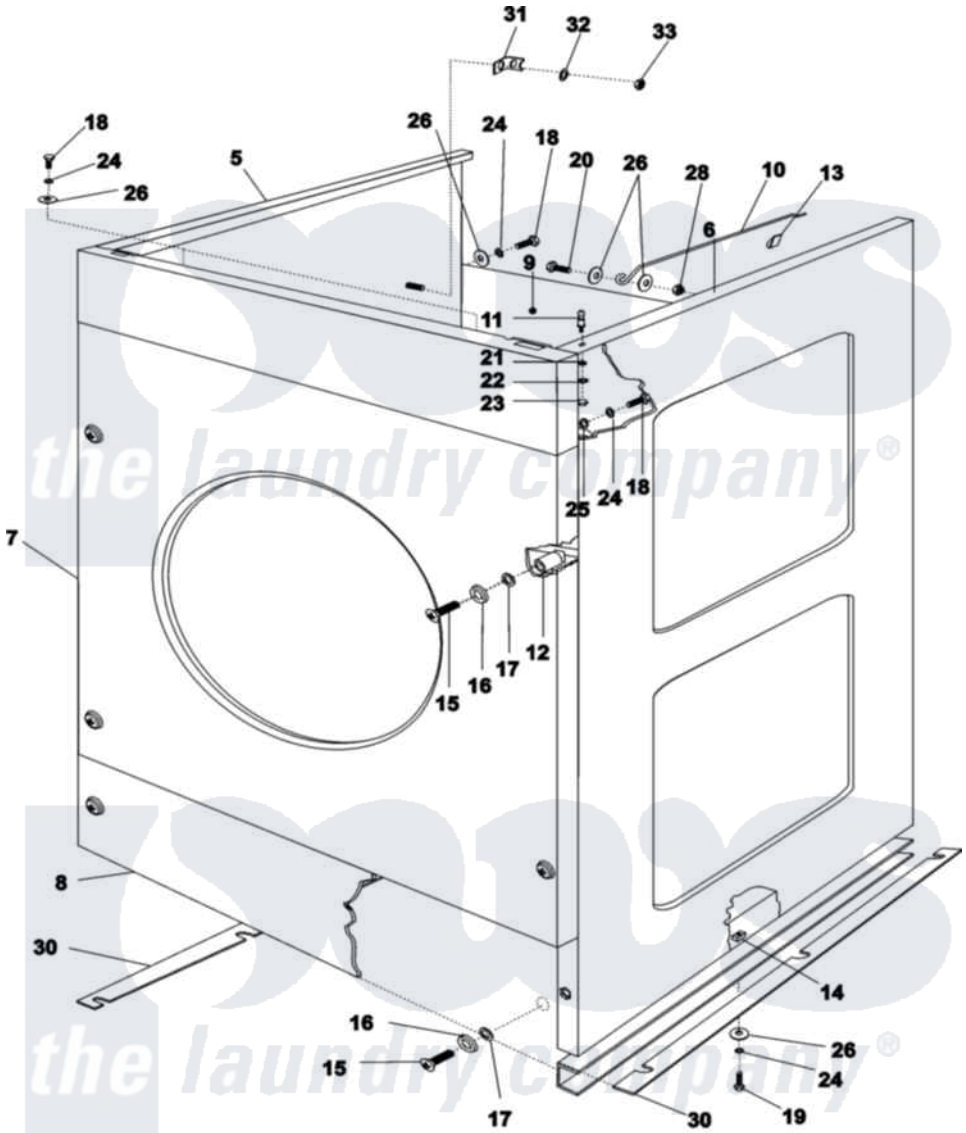

19-Jun-05
504 649A

Maytag Commercial Maytag MFR60PNCTS Washer Parts Parts Diagram 02 - CABINET (PN)
Click on the part number to view part

Item	Original Part Number	Replaced By	Status	Part Description
005	23004224			Panel, Side LH Mfr60
006	23004225			Panel, Side RH Mfr60
007	23004227			Panel, Front Pn Mfr60
008	23004228			Panel, Service
009	23004229			Panel, Back
010	23001330			Rod, Top Panel Support
011	23001332			Alignment Pin
012	23002860			Tube, Distance
013	23002454			Self Sticking Cable Clip
014	23004230			Nut, Rapid M6
015	23002456	23003478		Screw
016	23002457			Washer M6
017	23002458			Washer
018	23002461			Screw
019	23002861			Screw Lu
020	23002463			Screw

021	23002862	23001708		Washer
022	23002836			Washer
023	23003773		Not Available	NUT M6
024	23002440			Washer, Spring Lock
025	23003778	23002756		Lockwasher
026	23002469	23001309		Washer Lu
028	23002471	23001310		Nut, Self Locking
030	23004231			Shim
031	23004232			Bracket, Cable
032	23001573			Washer
033	23002652			Nut

the laundry company®
the laundry company®
the laundry company®