Maytag MFS50PNFVS 07 - MOTOR AND BASKET PULLEY

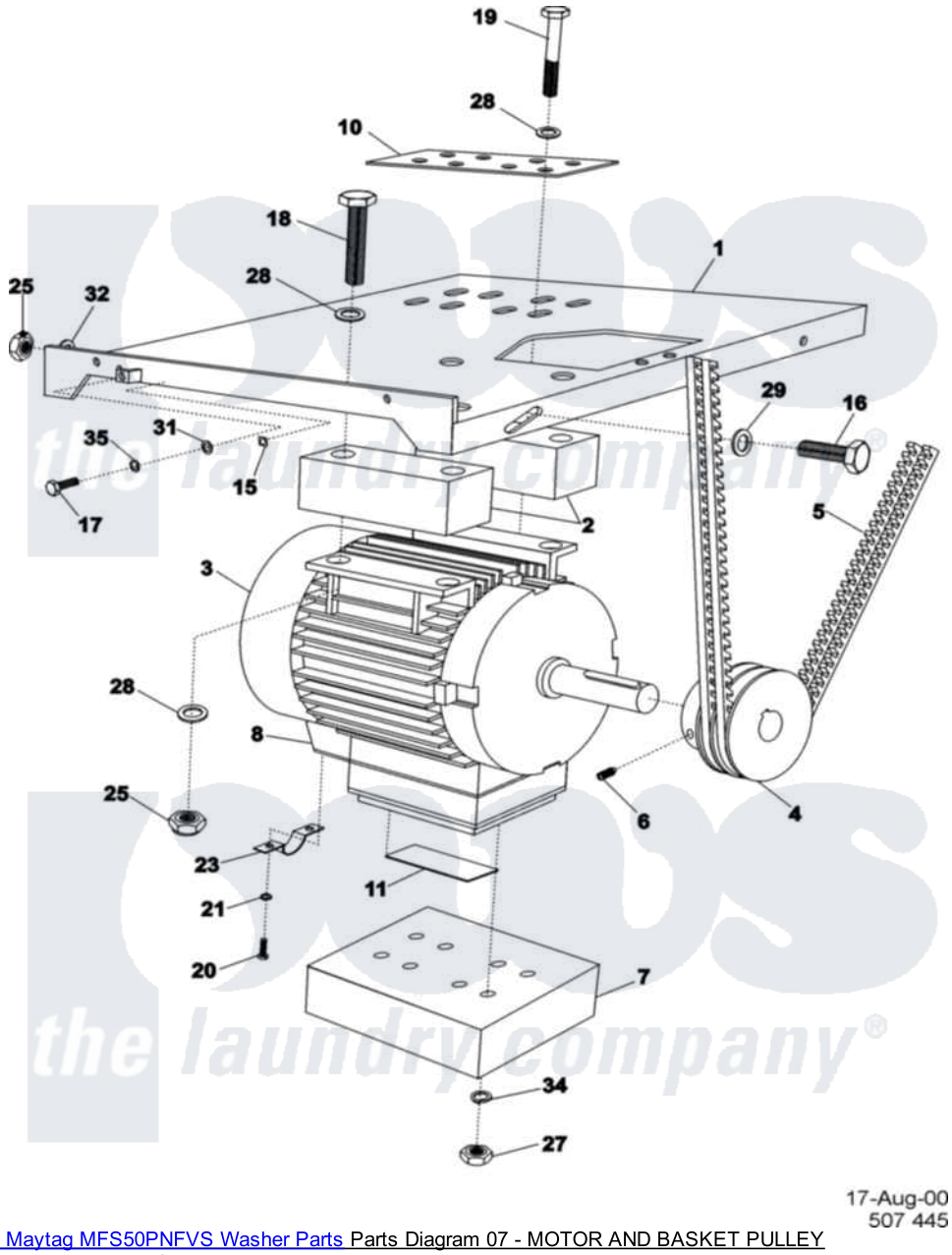

Maytag Commercial Maytag MFS50PNFVS Washer Parts Parts Diagram 07 - MOTOR AND BASKET PULLEY
Click on the part number to view part

Item	Original Part Number	Replaced By	Status	Part Description
001	23004341			Plate, Drive Complete
002	23004348			Motor Washer
003	23004086			Drive Motor, 3X380-415v, 1 x 220 x 240V, 3X208-240V
004	23004018			Motor Pulley
005	23004342			V-Belt
006	23001658			Screw
007	23004343			Large Support Weight
008	23004344			Cable Holder Complete
011	23003944		Not Available	LABEL, MOTOR
015	23002505			Plate, Earth
016	23002661	23001283		Bolt
017	23001733			Screw
018	23004345			Bolt M12x100
019	23004346			Bolt M8x50
020	23002423	23001361		Bolt
021	23004347			Washer 4

023	23004021			Cable Socket
025	NLA		Not Available	NUT (M12)
027	23002435	23001266		Nut M8
028	23003769	23001203		Washer
029	23002657	23001292		Washer
031	23003767			Washer Brass
032	23002658			Washer
034	23002439	23001265		Washer
035	23002440			Washer, Spring Lock

the laundry company®
the laundry company®
the laundry company®