Maytag MLE19PRAYW 14 - BASE (WASHER)

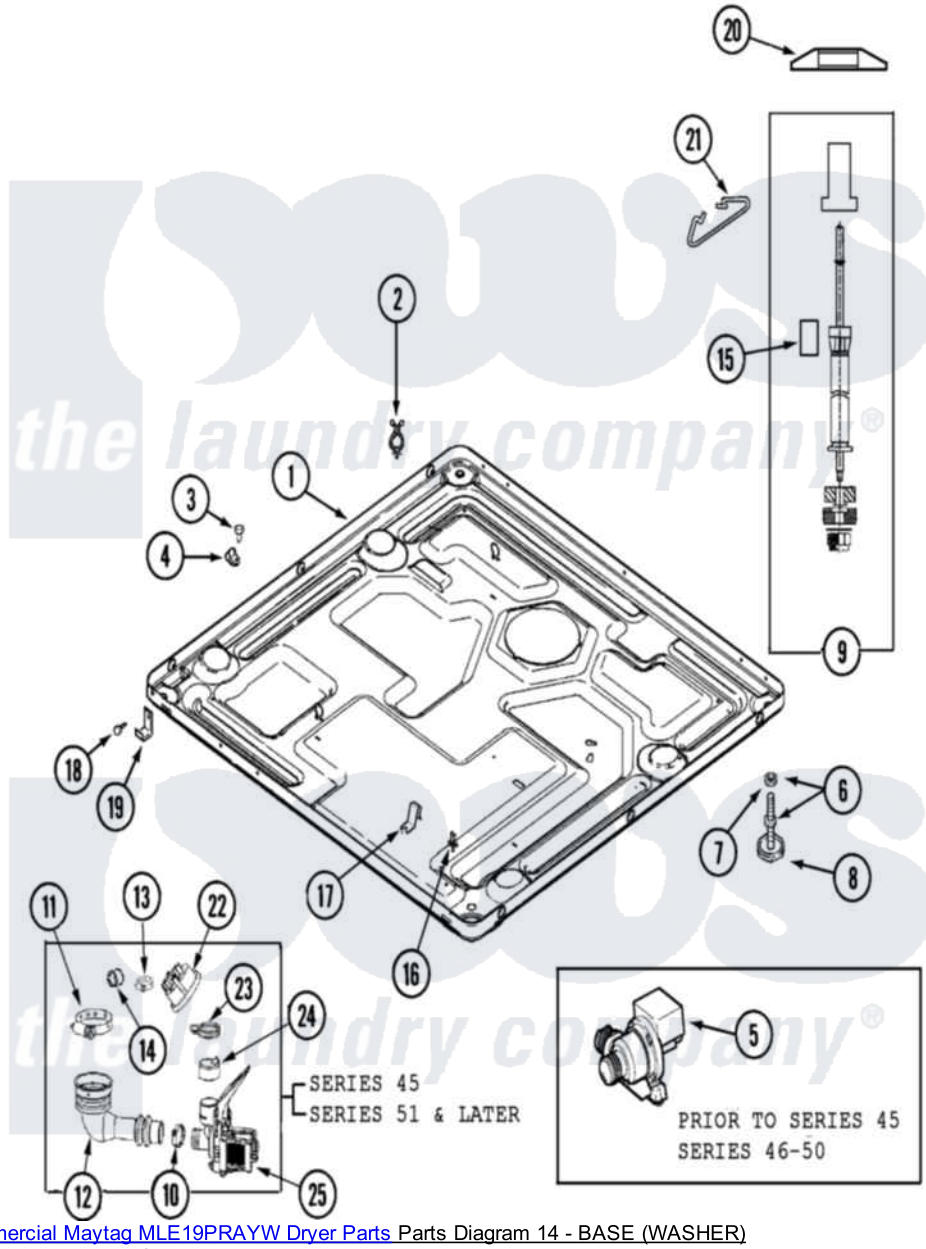

Maytag Commercial Maytag MLE19PRAYW Dryer Parts Parts Diagram 14 - BASE (WASHER)
Click on the part number to view part

Item	Original Part Number	Replaced By	Status	Part Description
001	22002240	22003435		Base, Assembly
"	22003580			Base, Assembly
002	315471	22003298		Retainer, Wire
"	33001989			Retainer, Vault Switch
003	Y313561			Screw----NA
004	22002014			Clip, Harness To Support
005	22002939	22003059		Pump, Drain
006	22001915	22003544		Adjustable Leg W/Foot And Nut
007	Y052740	62739		Nut, Lock
008	210684			Foot, Adjustable Leg
009	22001988			Strut Assembly-Rear
010	22001984	285655		Clamp, Hose
011	22002053	696392		Hose Clamp
012	22003262			Hose, Tub To Pump Outlet
"	22003263			Screw, Sump Cap
013	22003295	285655		Clamp, Hose

014	22003261			Plug, Outer Tub
015	33002224			Sleeving, Braided
016	Y313262	W10116752		Retainer-
017	22002244			Clip, Grounding
018	33002190			SCrew, C BraCe, BraCket, Cabinet
019	22002239			Clip, Front Panel
020	33002222			Deflector, Water
021	33002223			Restrainer, Tube
022	22003728			Switch, Pressure Items 22-30 Listed As Series
"	NLA		Not Available	BAG, PLASTIC W/DRAWSTRING
023	22002853	285655		Clamp, Hose
024	22003268			Cap, Rubber
025	22003244	25001052		Pump Assembly

the laundry company®
the laundry company®
the laundry company®