# Whirlpool CA2751XWG0 03 - CONSOLE

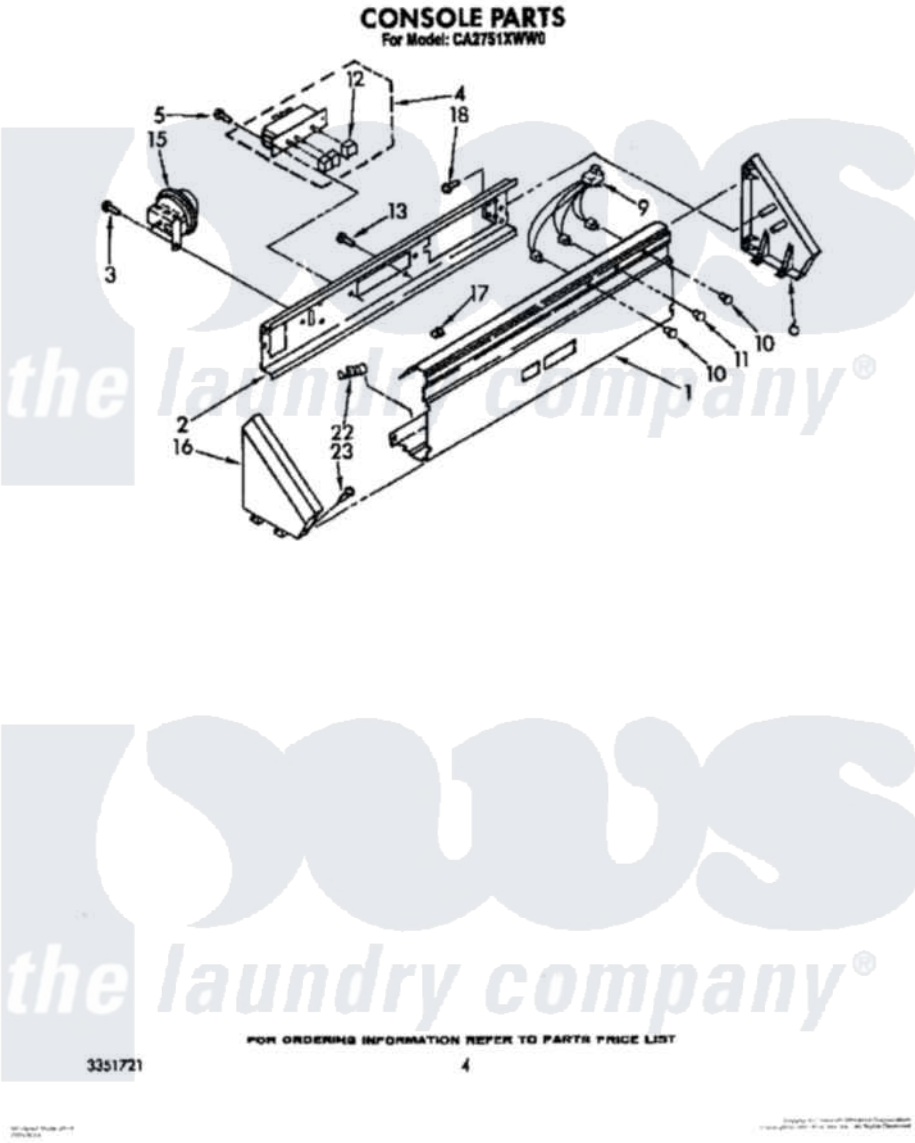


Whirlpool Commercial Whirlpool CA2751XWG0 Washer Parts Parts Diagram 03 - CONSOLE
Click on the part number to view part

| Item | Original Part Number | Replaced By | Status | Part Description |
|---|---|---|---|---|
| 1 | 3353946 | | | Panel, Console |
| 2 | 3352860 | | | Bracket, Control |
| 3 | 90767 | | | Screw, 8A X 3/8 HeX Washer Head Tapping |
| 4 | 389138 | 3355916 | | Switch, Cycle Selector |
| 5 | 9424101 | 965173 | | Screw, 8 X 3/8 Phlps. Round Hd. |
| 6 | 3347705 | | | End Cap |
| 9 | 3352457 | | | Lights, Indicator |
| 10 | 3348109 | | | Lens Light |
| 11 | 3348110 | | | Lens, Yellow |
| 12 | 3348587 | | | Button, Pushbutton |
| 13 | 690989 | 681414 | | Screw, 10AB X 1/2 |
| 15 | 3348542 | 279947 | | Switch-WL |
| 16 | 63789 | 285653 | | Endcap |
| 17 | 689559 | | | Nut, Push-In |
| 18 | 355326 | | Not Available | Screw, End Cap To Bracket |

| | | | | |
|---|---|---|---|---|
| 18 | 353526 | | Not Available | (4) |
| 22 | 357572 | W10113937 | | Clip, Grounding |
| 23 | 64211 | 388326 | | Screw, 8-18 X 1.25 |

the laundry company®

the laundry company®

the laundry company®