Whirlpool CAM2752JQ0 04 - METER CASE

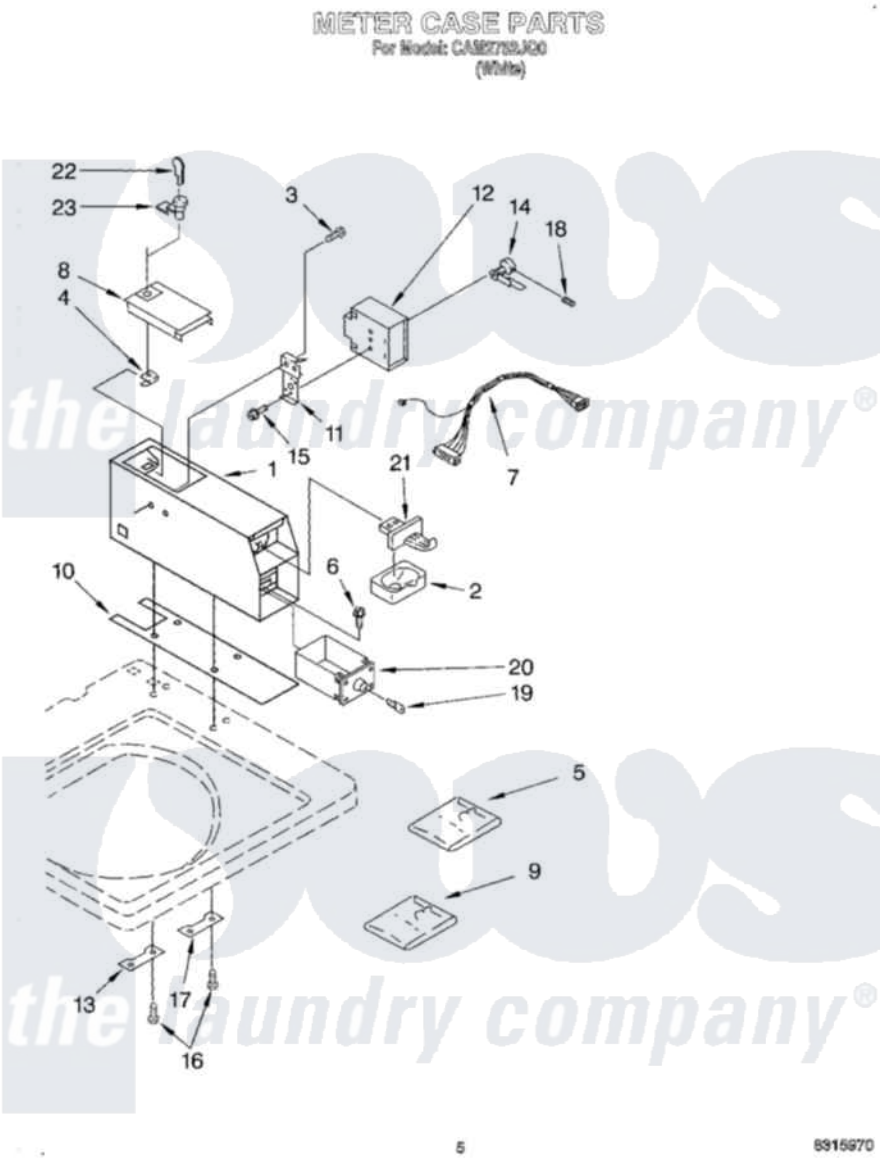

Whirlpool Commercial Whirlpool CAM2752JQ0 Washer Parts Parts Diagram 04 - METER CASE
Click on the part number to view part

Item	Original Part Number	Replaced By	Status	Part Description
1	3406994			Case, Meter
2	385421			Funnel, Coin
3	339805			Screw, 10-32 X 3/16
4	90406			Cage Nut, 5/16-18
5	8316238	279950		Funnel
6	3353994			Bolt, Meter Case Mounting
"	3349065			Bolt, Meter Case Mounting
7	3954764			Wire Harness
8	3351136			Service Door Assembly
9	3954807			Kit, Vertical 8-Coin Coin Mechanism Parts, May be Ordered From Whirlpool Or The Vend
10	3348850	3954812		Cushion, Meter Case
11	385575			Bracket, Timer
12	3954756	8575004		Timer, 60 Hz
13	3353813			Plate, Mounting

14	385571		Clutch, Timer
"	354987		Ring, Retaining
15	3400064		Screw, Timer Mounting
16	98445		Screw, 10-16 X 3/4
17	3347825	3353813	Plate, Mounting
18	98654	8533976	Set Screw

the laundry company®

the laundry company®

the laundry company®