Whirlpool CAM2762JQ0 06 - AGITATOR, BASKET AND TUB

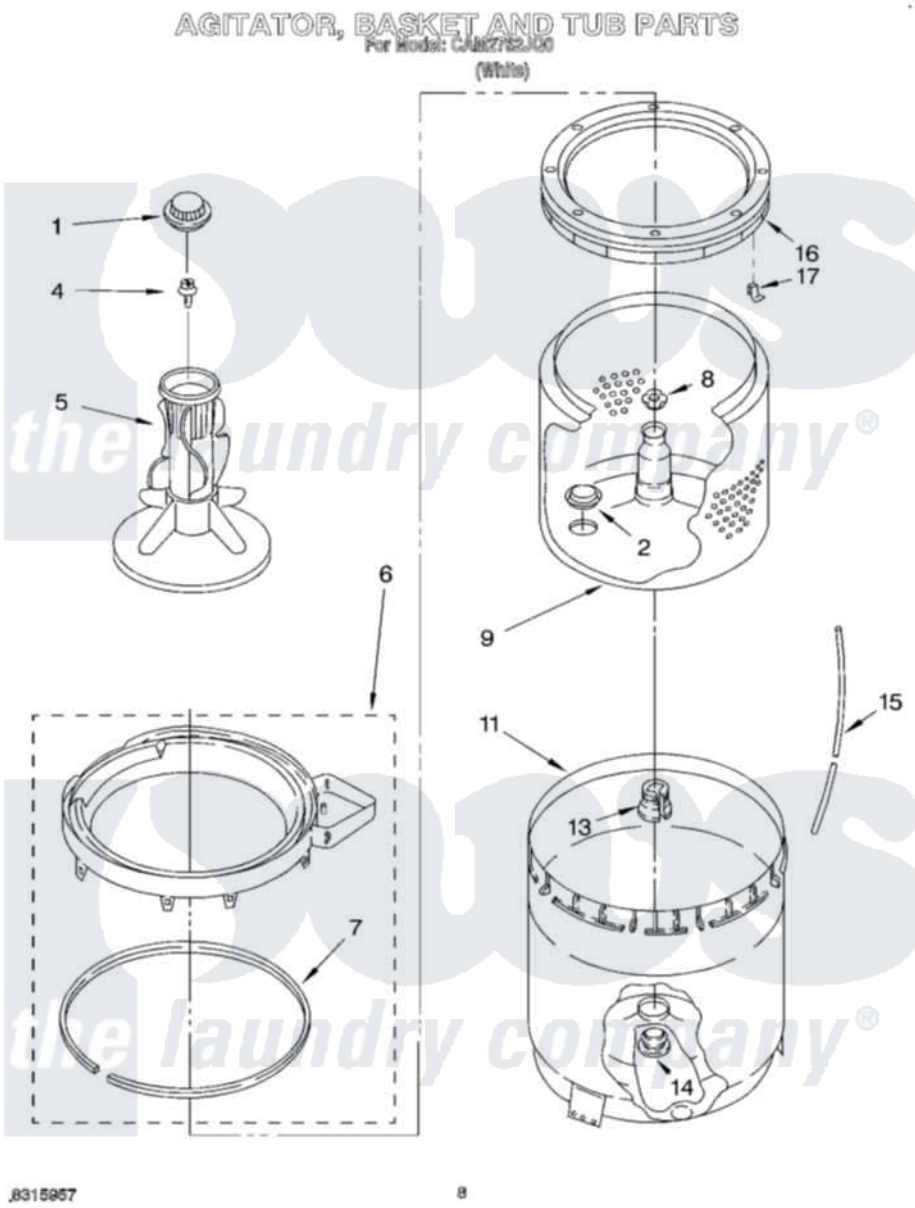

Whirlpool Commercial Whirlpool CAM2762JQ0 Washer Parts Parts Diagram 06 - AGITATOR, BASKET AND TUB
Click on the part number to view part

Item	Original Part Number	Replaced By	Status	Part Description
1	3355758			Cap, Agitator
2	3352284	285630		Plug
4	358237			Screw And Washer
5	3350151	285622		Agitator
6	3360611			Tub Ring And Gasket Assembly
7	3359586			Gasket, Tub Ring
8	21366			Nut, Spanner
9	8271650	3956207		Basket And Balance Ring
11	63125			Tub
13	389140			Tub Block, Basket Drive
14	383727			Gasket, Centerpodt
15	386757	353244		Hose, Pressure Switch
16	387868	3956205		Balance Ring
17	387868	3956205		Balance Ring