Whirlpool CEP2960JQ0 04 - CABINET

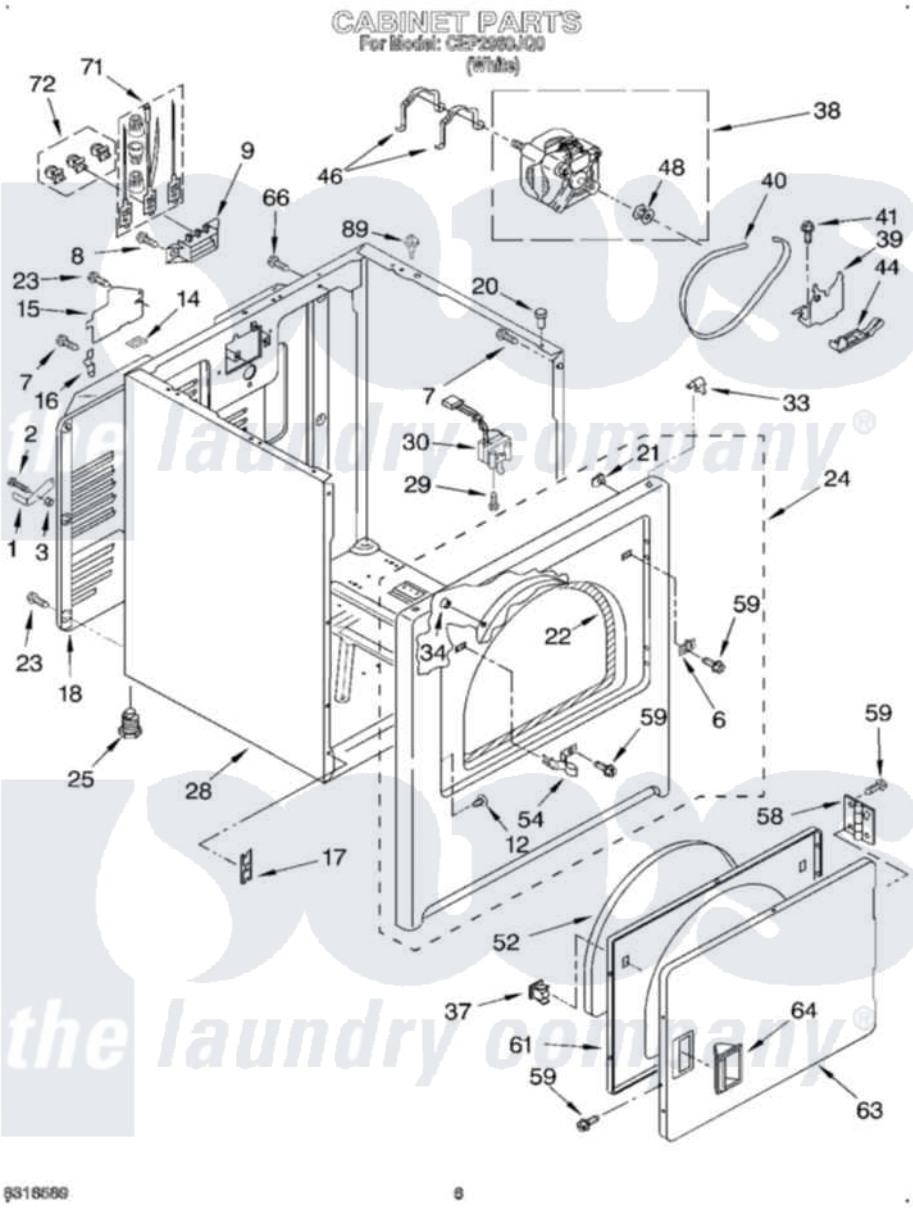

Whirlpool Commercial Whirlpool CEP2960JQ0 Dryer Parts Parts Diagram 04 - CABINET
Click on the part number to view part

Item	Original Part Number	Replaced By	Status	Part Description
1	3406857	3954895		Bracket, Top Lock
2	354730			Bolt, 5/16-18 X 2 3/4
3	90984			Nut, 5/16-18
6	3403630			Plug, Strike Hole
7	343641	681414		Screw, 10AB X 1/2
8	3393008	308685		Side Trim)
9	3397659			Block, Terminal
12	3404413			Plug, Hinge Hole
14	18849			Pad, Top Hinge
15	3396795			Cover, Terminal Block
16	238088	8066217		Hinge, Top
17	3394083			Clip, Front Panel
18	3396805	280043		Panel-Rear
20	98669			Lock, Front Top
21	98234			Clip, U-Bend
22	3406129			Seal And Bearing Assembly

23	693995		Screw, Hex Head
24	3403444	279852	Panel
25	3392100	49621	Feet-Leveling
"	279810		Foot-Optional
28	3399585	3406812	Cabinet
29	697773	3395530	Screw
30	3406109	3406107	Door Switch Assembly
33	18776		Lock, Front Top
34	685203	279220	Clip
37	690081	279570	Latch
38	3976707	279827	Motor-Drve
39	348780		Base, Motor
40	8066065	341241	Belt
41	3400500		Bolt, 3405245 5/16-18 X 3/4
44	3394332	691366	Idler And Pulley Assembly
46	660658		Clamp, Motor Mounting 343481 685441
"	343481	660658	Clamp, Motor Mounting 343481 685441
"	685441	660658	Clamp, Motor Mounting 343481 685441
48	3394341	W10299847	Pulley-Motor
52	3405246		Seal, Door Push-To-Start
54	3403431		Strike, Panel
58	3405514	W10362431	Hinge And Pin Assembly
59	342055	488627	Screw
61	3402341		Door, Inner
63	3402335		Door, Front
64	3405184		Handle, Door
66	697776	4331106	Screw, No.10-32 X 7/16
71	279318		Terminal Tinned And Brass Panel
72	279393		Terminal Block Screw Kit
89	356837		Locator, Top Lock

the laundry company®