Admiral AW20K3H 04 - CONTROL PANEL (REV. A-D)

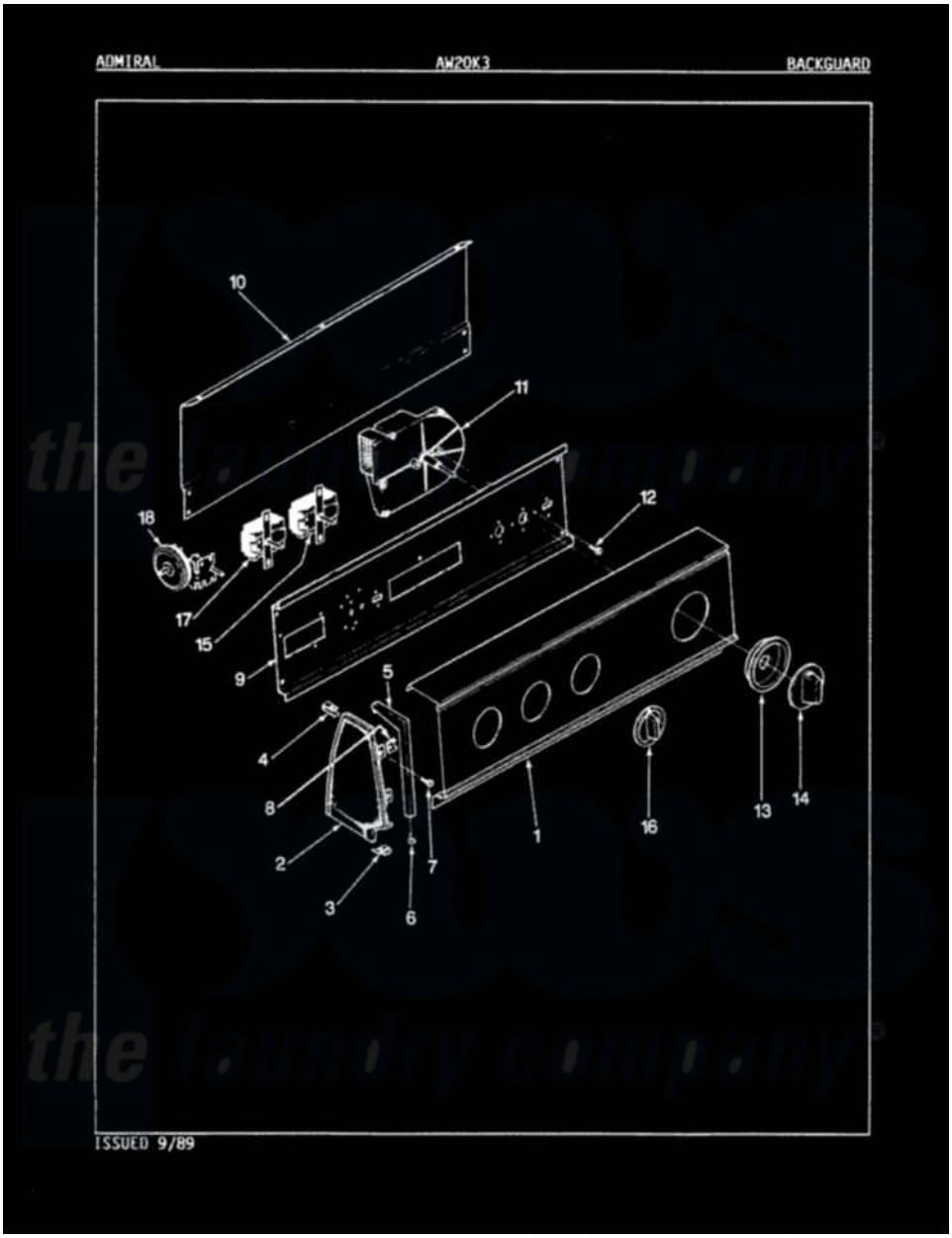

Admiral Residential Admiral AW20K3H Washer Parts Parts Diagram 04 - CONTROL PANEL (REV. A-D)
Click on the part number to view part

Item	Original Part Number	Replaced By	Status	Part Description
1	25-7702			Speedclip, End Cap To Control Panel
"	25-7793			Screw
"	35-2174		Not Available	PANEL, CONTROL
"	35-2554		Not Available	PANEL, CONTROL
2	53-0265			LH Endcap
"	53-0264			RH Endcap
3	25-7851			Speedclip, End Cap To Top
"	25-7697	25-2219		Screw
"	34-9487		Not Available	PLATE, REINFORCEMENT
4	25-7435	33002917		Screw, No.10-16
"	25-7852			Speedclip, Rr Shld To End Cap
5	53-0277		Not Available	TRIM, END CAP (RT)
"	53-0278		Not Available	TRIM, END CAP (LT)
6	25-7760			Screw
7	25-3092	90767		Screw, 8A X 3/8 HeX Washer

7	25-3092	90767		Head Tapping
8	25-7702			Speedclip, End Cap To Control Panel
9	53-0365	53-1676		Shield, Control
10	25-3457			Screw, Sems
"	25-3092	90767		Screw, 8A X 3/8 HeX Washer Head Tapping
"	53-0268	21001460		Shield, Rear
11	35-2211		Not Available	TIMER
12	25-0206		Not Available	SCREW, TIMER TO SHIELD
13	35-2255	21001497		Skirt Ri
14	35-2187	12500058		Knob Ski
15	25-3092	90767		Screw, 8A X 3/8 HeX Washer Head Tapping
"	35-0114		Not Available	TEMP SWITCH
16	35-2185	21001283		Knob, Selector----Piq
17	25-3092	90767		Screw, 8A X 3/8 HeX Washer Head Tapping
"	35-2193		Not Available	SWITCH, ROTARY SPEED
18	35-2569		Not Available	MANUAL, USE & CARE
"	35-2145	21001554		Switch, Water Level
NI	35-2569		Not Available	MANUAL, USE & CARE

the laundry company®