Admiral LA2000H 04 - CONTROL PANEL (REV. G-L)

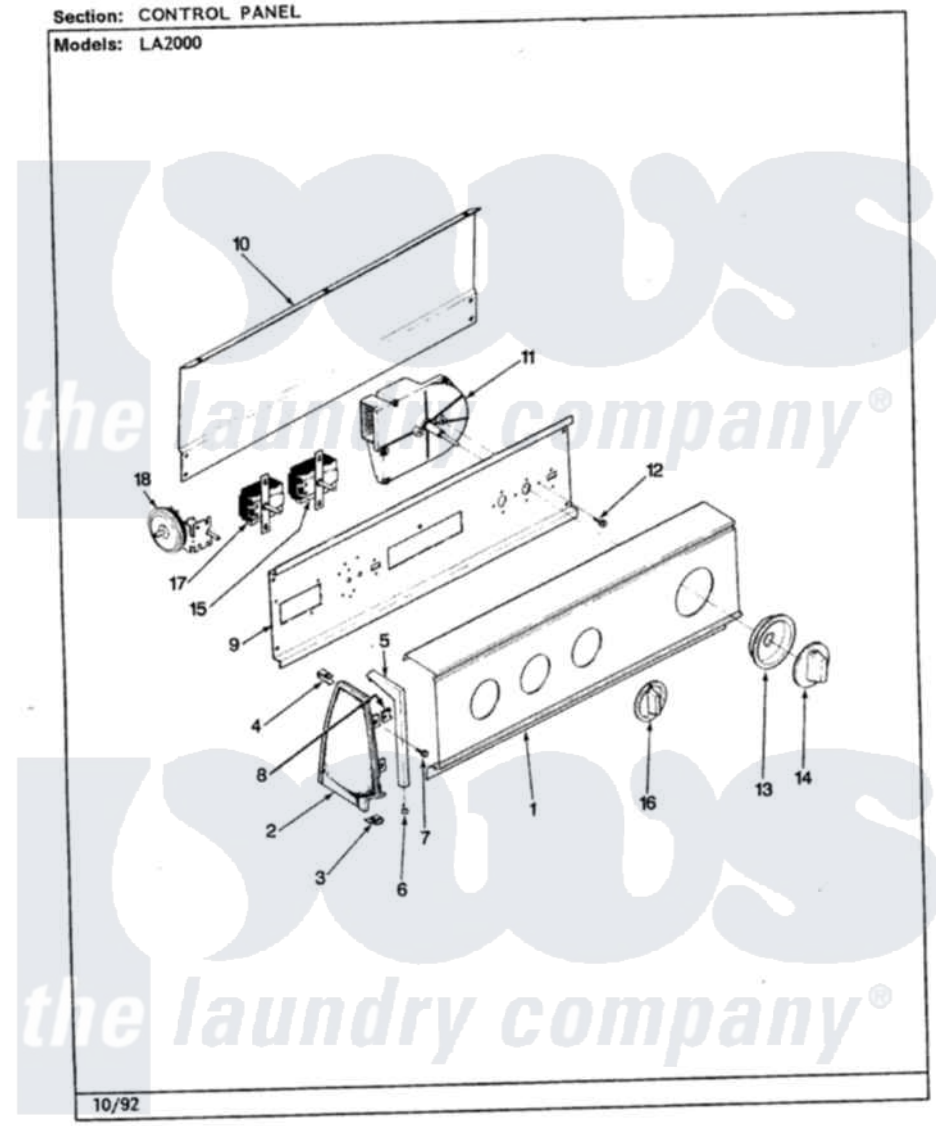

Admiral Residential Admiral LA2000H Dryer Parts Parts Diagram 04 - CONTROL PANEL (REV. G-L)
Click on the part number to view part

Item	Original Part Number	Replaced By	Status	Part Description
1	25-7793			Screw
"	25-7702			Speedclip, End Cap To Control Panel
"	35-2589		Not Available	PANEL, CONTROL
2	35-2487	21001451		Cap- End
"	35-2488	21001452		Cap- End
3	25-7851			Speedclip, End Cap To Top
"	25-7697	25-2219		Screw
"	34-9487		Not Available	PLATE, REINFORCEMENT
4	25-7852			Speedclip, Rr Shld To End Cap
"	25-7435	33002917		Screw, No.10-16
5	53-0277		Not Available	TRIM, END CAP (RT)
"	53-0278		Not Available	TRIM, END CAP (LT)
6	25-7760			Screw
7	25-3092	90767		Screw, 8A X 3/8 HeX Washer Head Tapping

8	25-7702			Speedclip, End Cap To Control Panel
9	53-1676			Shield, Control
10	25-3457			Screw, Sems
"	25-3092	90767		Screw, 8A X 3/8 HeX Washer Head Tapping
"	25-7853	25-7933		Ring, Retaining
"	35-2688	21001460		Shield, Rear
11	35-2211		Not Available	TIMER
12	25-0205	216412		Screw, Bracket To Timer
13	35-2254	12500058		Knob Ski
14	35-2486	12500058		Knob Ski
15	25-3092	90767		Screw, 8A X 3/8 HeX Washer Head Tapping
"	35-0114		Not Available	TEMP SWITCH
16	35-2185	21001283		Knob, Selector----Piq
17	35-2193		Not Available	SWITCH, ROTARY SPEED
"	25-3092	90767		Screw, 8A X 3/8 HeX Washer Head Tapping
18	35-2145	21001554		Switch, Water Level
"	35-2604		Not Available	MANUAL, USE & CARE
"	25-3092	90767		Screw, 8A X 3/8 HeX Washer Head Tapping
"	35-3283	21001554		Switch, Water Level