Admiral LNC7766B71 03 - DOOR

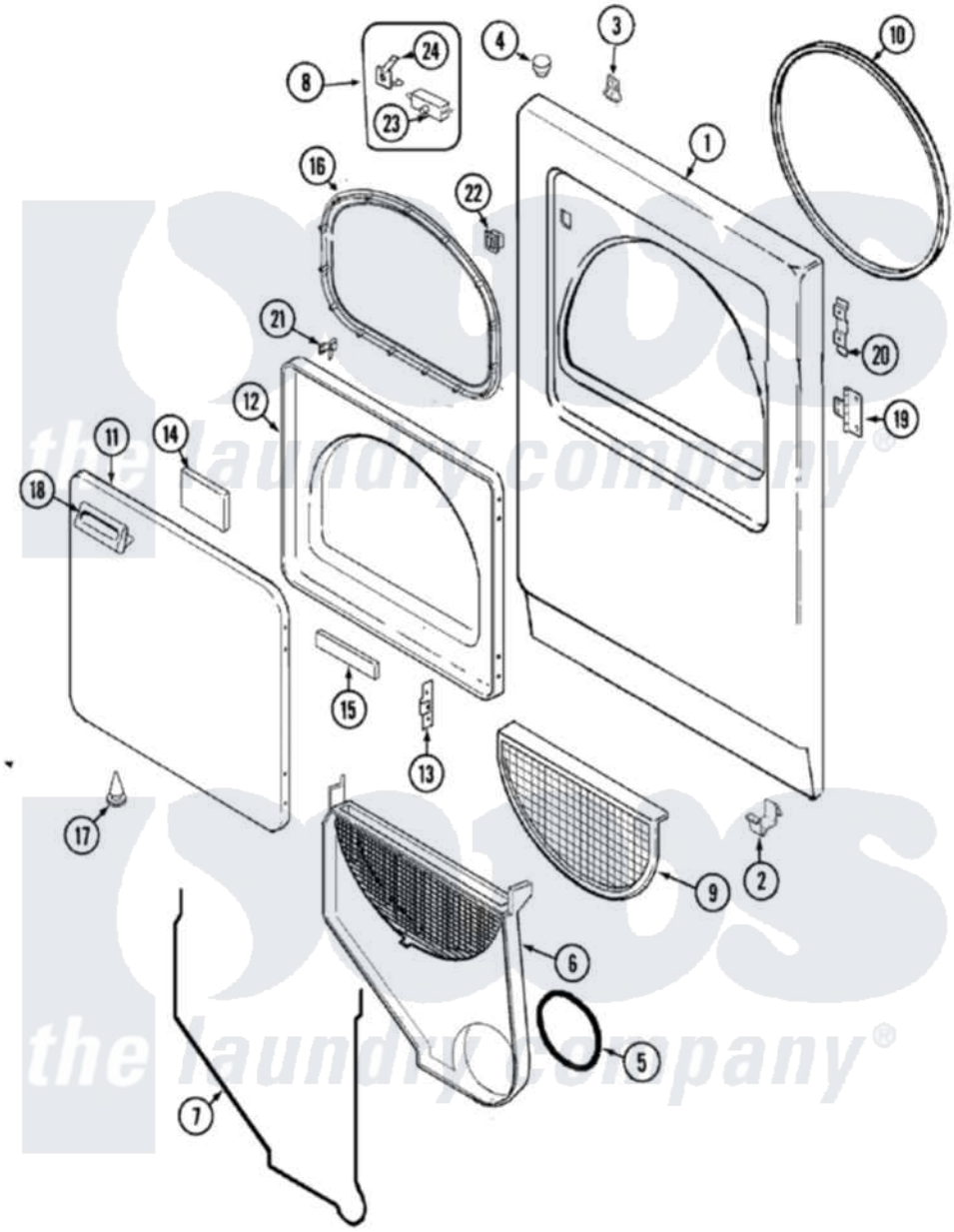

Admiral Residential Admiral LNC7766B71 Dryer Parts Parts Diagram 03 - DOOR
Click on the part number to view part

Item	Original Part Number	Replaced By	Status	Part Description
1	53-0726	31001771		Panel, Front
2	53-0120			Clip, Front Panel
3	31001526			Lock, Top
4	33-2653			Bumper, Cabinet
5	53-0203	12001324		Duct Kit, Collector
6	25-7810	415013-35		Screw
"	12001324			Duct Kit, Collector
7	53-0204			Seal
8	LA-1005			Switch Kit
9	53-0918			Filter, Lint
10	53-0281	31001747		Seal Assembly
11	25-7770	3196169		Screw, Element
"	53-0154			Panel, Outer Door
12	53-0912		Not Available	PANEL, INNER DOOR (WHT)
13	53-0119			Clip, Hinge
14	53-1490			Door Pad

15	53-1491			Door Pad
16	53-0648	31001529		Seal, Door
17	25-7889			Plug Button
18	25-7810	415013-35		Screw
"	53-0927			Handle, Door
19	25-7809			Screw, No.6-20 1/2 Flthd Torx
"	53-1492			Hinge, Dryer Door
20	53-0121		Not Available	TWIN NUT
21	53-2364	LA-1003		Door Catch Kit
22	53-0187	LA-1003		Door Catch Kit
23	53-0147	53-0148		Switch, Door
24	63-5990	31001319		Clip, Switch

the laundry company®
the laundry company®
the laundry company®