Amana AA5222 13 - MOTOR, MTG BRACKET, BELTS & IDLER ASSY

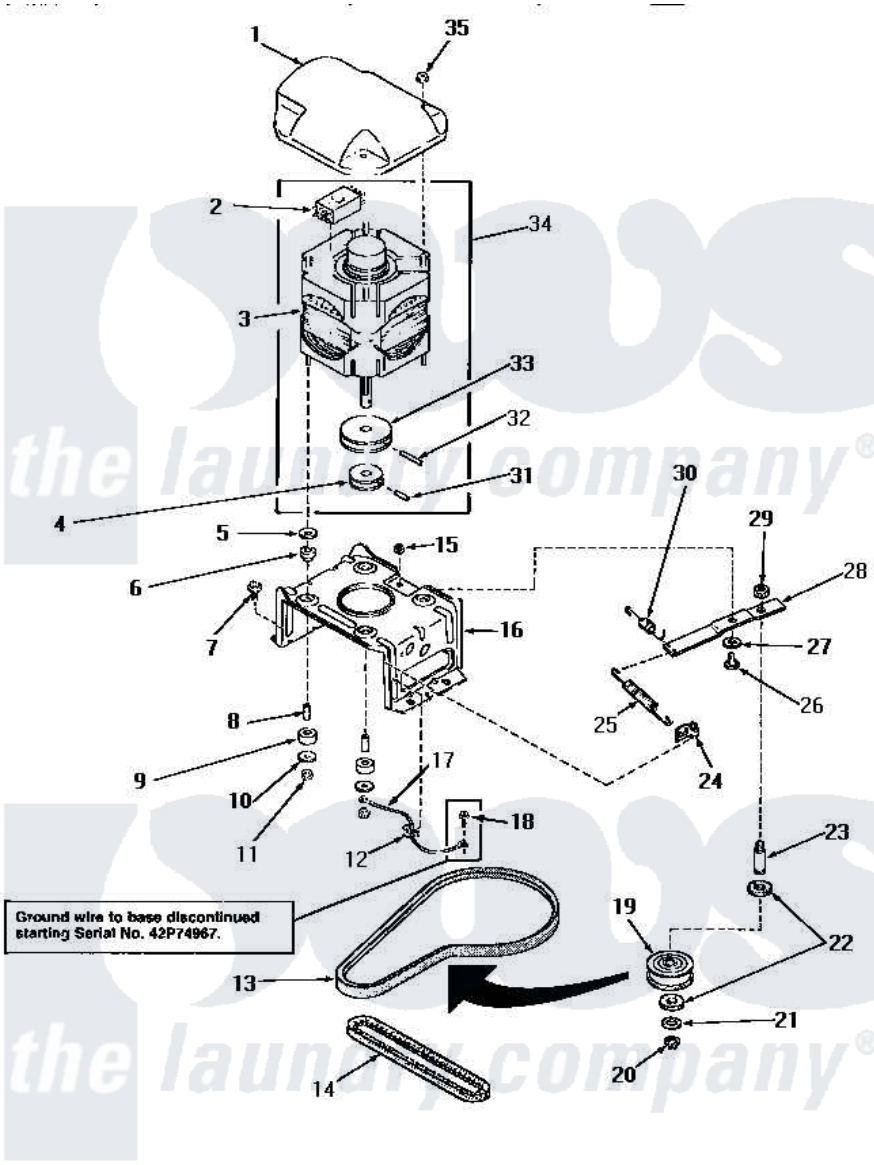

MOTOR, MOUNTING BRACKET, BELTS AND IDLER ASSEMBLY

Amana Residential Amana AA5222 Washer Parts Parts Diagram 13 - MOTOR, MTG BRACKET, BELTS & IDLER ASSY
Click on the part number to view part

Item	Original Part Number	Replaced By	Status	Part Description
1	27136			Shield, Motor
2	30895A	30895AP		Switch Motor-W/Instr
"	24139		Not Available	SWITCH,MOTOR
3	30895	27179P		Motor-Drve
4	Y27104		Not Available	PULLEY,MOTOR
5	03888		Not Available	WASHER
6	01952A			Mounting, Rubber
7	Y31645	27001200		Screw
8	27181		Not Available	SPACER,MOTOR
9	01953		Not Available	WASHER,LOWER MOTOR MOU
10	03888		Not Available	WASHER
11	23604			Nut, Hex 10-32 Lock
12	Y00161	B5733302		Clip, Ground
13	28808			Belt, Agitate And Spin
14	27155			Belt, Pump
15	52566	27001225		Nut, Jam Mid Lock 1/4-20

16	28791			Bracket, Motor Mount
17	Y00000000		Not Available	SEE NOTE GROUND WIRE, GREEN
18	26592		Not Available	HEX HEAD SCREW
19	28800		Not Available	WHEEL,IDLER
20	23748			Ring, Retaining
21	52549			Washer, 501 ID X3/4 Odx
22	Y29443			Washer, Felt
23	28802			Shaft, Idler
24	28849			Clip, Spring
25	28807	37366		Spring, Idler
26	27229	40038901		Screw, 1/4-20
27	81392	40054701		Washer
28	31054	40041002		Lever, Idler
29	28803	2221070		Clamp, Nylon
30	30620		Not Available	SPRING,IDLER LEVER HEL
31	10416			Pin, Roll
32	23750			Pin, Roll
33	27171		Not Available	PULLEY,MOTOR
34	27179	27179P		Motor-Drve
35	27201			Locknut
NI	20605		Not Available	LUBE,HI TEMPERATURE-56
"	258P3		Not Available	KIT,CAPACITOR

the laundry company®