# Amana AEM477L2 04 - FR BLKHD, AIR DUCT, FELT SEAL & CYLINDER

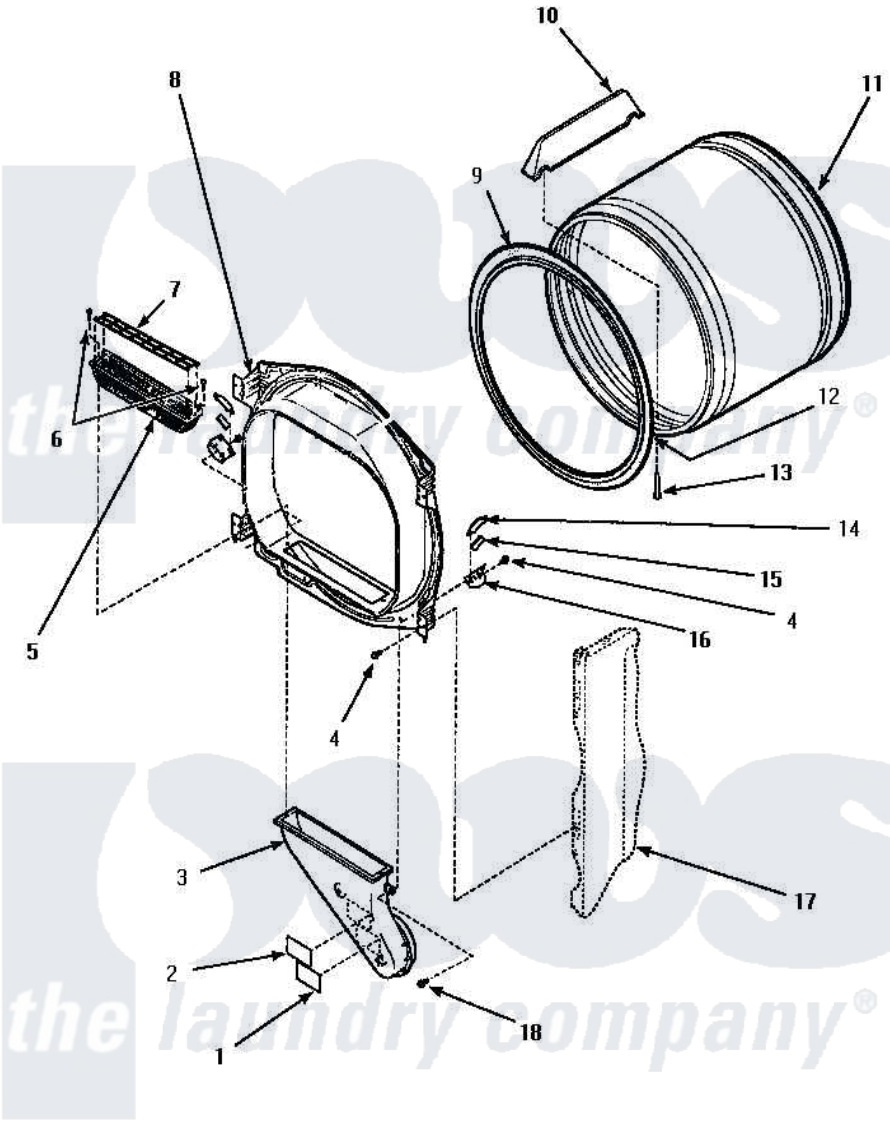


**FRONT BULKHEAD, AIR DUCT, FELT SEAL AND CYLINDER**

Amana Residential Amana AEM477L2 Washer Parts Parts Diagram 04 - FR BLKHD, AIR DUCT, FELT SEAL & CYLINDER

Click on the part number to view part

| Item | Original Part Number | Replaced By | Status | Part Description |
|---|---|---|---|---|
| 1 | 56259 | | Not Available | STICKER |
| 2 | 500049 | | Not Available | STICKER |
| 3 | 502231 | | Not Available | DUCT, HEAT |
| 4 | 501668 | 503688 | | Screw, 10B-16 X .34 l |
| 5 | 502140P | | | Filter, Lint Kit |
| 6 | 500226 | | | Screw, 8b-16 x 5/8 Tap |
| 7 | 502092 | | | Cover, Lint Filter |
| 8 | 501801 | 37001132 | | Seal, Cylinder |
| 9 | 500117W | | Not Available | ASSY,BULKHEAD-FRONT-COMP |
| 10 | 500022 | 510102 | | Baffle- SH |
| 11 | 500013WP | | Not Available | ASSY,CYLINDER-HOME- |
| 12 | 22506P | 511637P | | Adh Dow 737 Clr 3 Oz Tube |
| 13 | Y62588 | | | Screw, 10BT-12 X 1 Tap |
| 14 | Y501676 | 37001298 | | Glide- Dry |
| 15 | 500121 | 510189 | | Pad Felt |

| | | | | |
|---|---|---|---|---|
| 16 | 501554 | 12002090 | | Bracket |
| 17 | Y00000000 | | Not Available | SEE NOTE CABINET -- (SEE CABINET PAGE) |
| 18 | Y31645 | 27001200 | | Screw |