Amana AGM479L2 (BOM: PAGM479L2) 16 - REAR BLKHD/FELT SEAL/CYL ROLLER & TERM

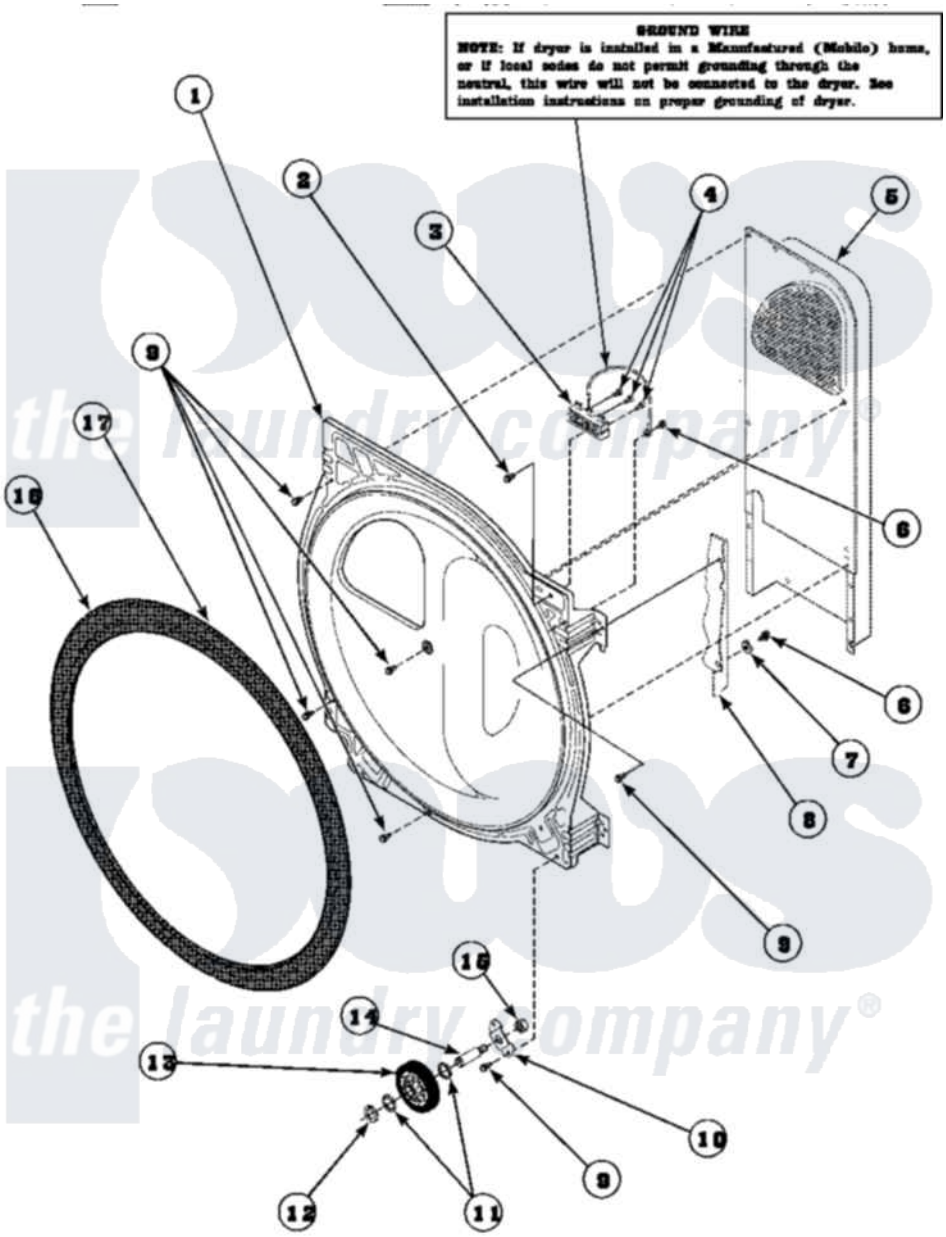

Amana Residential Amana AGM479L2 (BOM: PAGM479L2) Washer Parts Parts Diagram 16 - REAR BLKHD/FELT SEAL/CYL ROLLER & TERM
Click on the part number to view part

Item	Original Part Number	Replaced By	Status	Part Description
1	5002614W		Not Available	REAR BULKHEAD
2	501285			Screw, No.12 X 9/16-Pla
3	61923P	61923		Block, Terminal
4	Y61199	3400094		Screw, 10-32 X 3/8
5	500179P	503605		Assembly, Heater Duct
6	20530			Screw, 10-24 x 3/8 Hex
7	51474		Not Available	WASHER,13/64IDX1/2ODX.
8	500001P		Not Available	(ADD LETTER BEFORE ``P`` IN PART
9	501668	503688		Screw, 10B-16 X .34 I
10	500062	40113601		Assembly, Roller Brkt
11	52549			Washer, 501 ID X3/4 Odx
12	23748			Ring, Retaining
13	500214P	37001042		Assembly, Cylinder Roller
14	56461			Shaft

15	56156	358160	Nut
16	501801	37001132	Seal, Cylinder
17	22506P	511637P	Adh Dow 737 Clr 3 Oz Tube

the laundry company®

the laundry company®

the laundry company®