Amana ALE443RAC 03 - DOOR, FRONT, ACCESS AND TOP PANELS

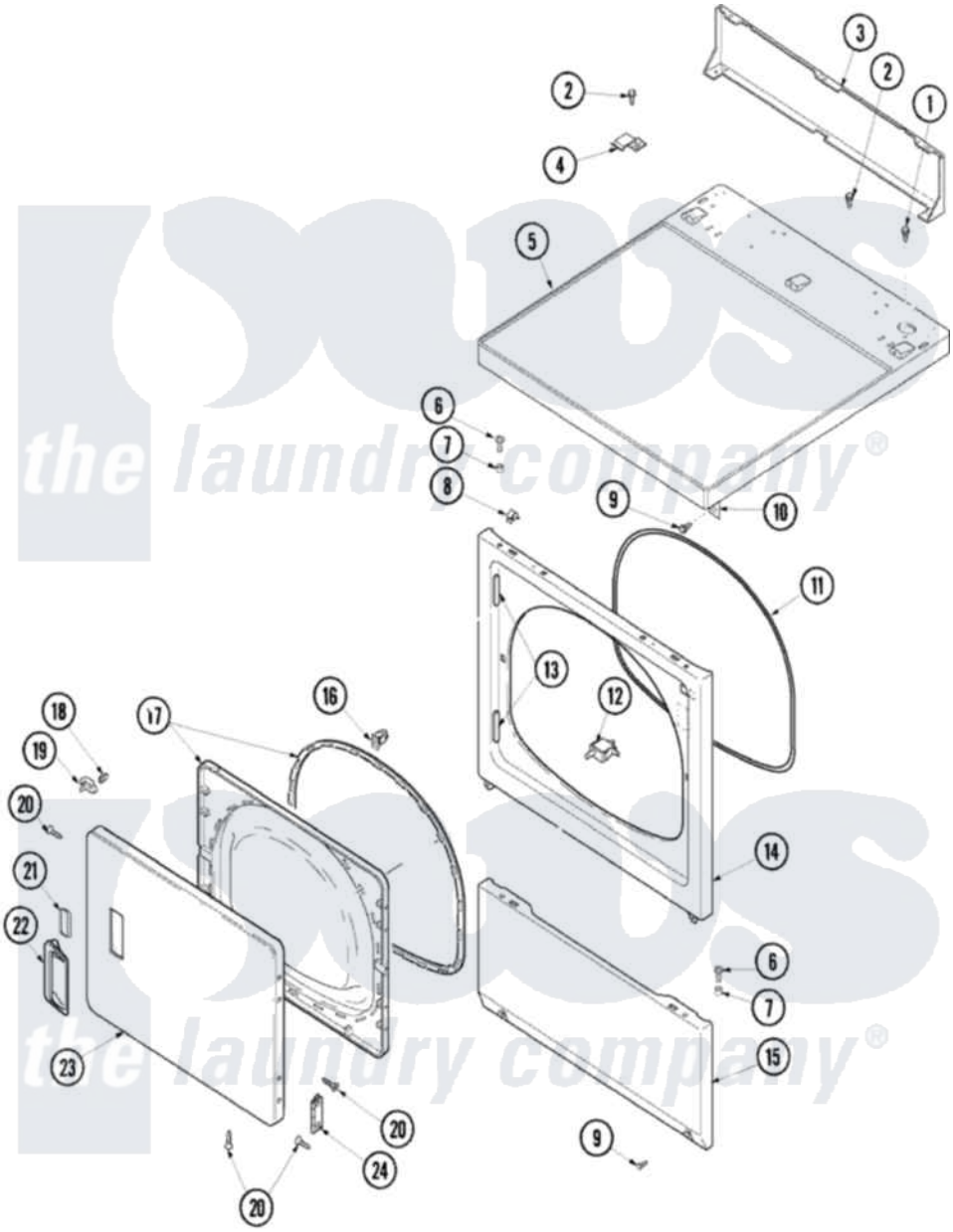

Amana Residential Amana ALE443RAC Dryer Parts Parts Diagram 03 - DOOR, FRONT, ACCESS AND TOP PANELS
Click on the part number to view part

Item	Original Part Number	Replaced By	Status	Part Description
1	503688			Screw, 10B-16 X .34 I
2	501086	90767		Screw, 8A X 3/8 HeX Washer Head Tapping
3	40121401			Panel, Home Hood Back
4	Y503876			Clip, Hold Down
5	40114301CP	37001033		Panel, Top
6	32671	Y014874		Screw, Idler Arm And Sleeve
7	505187			Locator, Panel
8	56080	22001650		Fastener, Spring
9	503661	27001200		Screw
10	40130801			Bracket, Top Mount
11	504005	511056		Seal Front Panel
12	Y504570	W10169313		Switch-Dor
13	503126			Plug, Hinge Hole
14	503656CP			Panel, Front
15	40045301CP			Panel, Access
16	54660	LA-1003		Door Catch Kit

17	503643W	37001028		Seal And Liner, Assembly
"	37001028			Seal And Liner, Assembly
18	500039	510181		Strike Doormetal
19	40116201			Bracket, Door Strike
20	500226			Screw, 8b-16 x 5/8 Tap
21	W10124350		Not Available	NOT REQUIRED PART OR SEE NOTE
"	505328			Wedge, Door Handle
22	37001047			Handle, Door
"	503646C		Not Available	PULL, DOOR (BSQ)
23	503654CP	12002135		Door Handle
"	37001034			Door, Dryer

the laundry company®
the laundry company®
the laundry company®