Amana ALG643RAW (BOM: PALG643RAW1) 02 - CONTROL PANEL

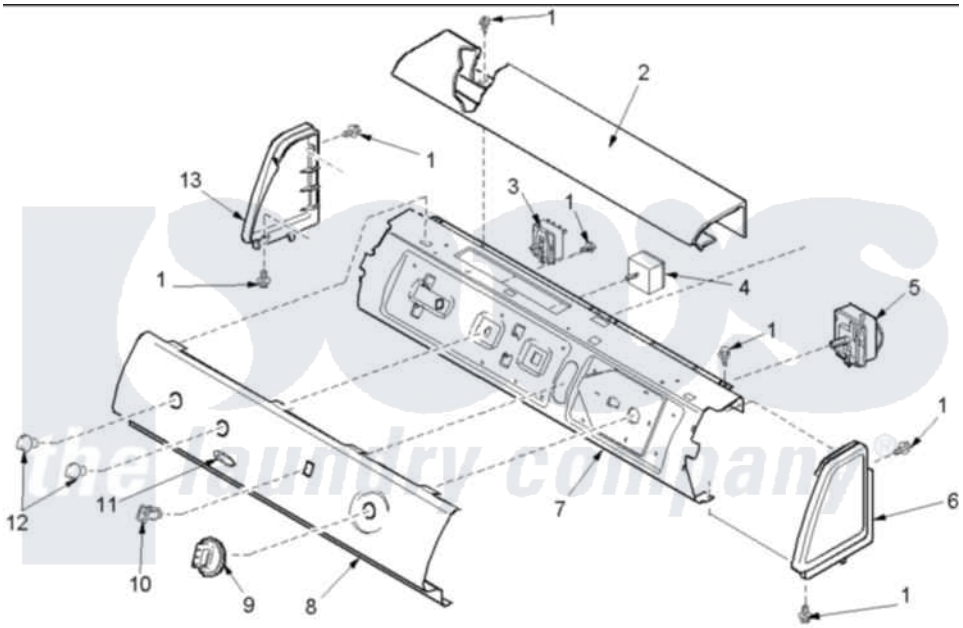

Amana Residential Amana ALG643RAW (BOM: PALG643RAW1) Dryer Parts Parts Diagram 02 - CONTROL PANEL
Click on the part number to view part

Item	Original Part Number	Replaced By	Status	Part Description
2	503674W			Cover, Top
3	40084201			Switch, Temp Selector
4	40070501			Buzzer, Adjustable
5	40112701	R0000410		Timer
6	40012701W		Not Available	ENDCAP (RT-WHT)
7	40039610			Panel, Support
8	40071303W			Panel, Graphic
9	40013601W	37001064		Knob- Time
10	38424W			Switch, Rocker
11	40083301			Medallion
12	40013402W	37001065		Knob- Sele
13	40012702W			Endcap
NI	37001301		Not Available	HARNESS, WIRE
"	40011702			Harness, Wire