Amana ALG866SBC (BOM: PALG866SBC) 04 - FRONT BULKHEAD, AIR DUCT & DRUM

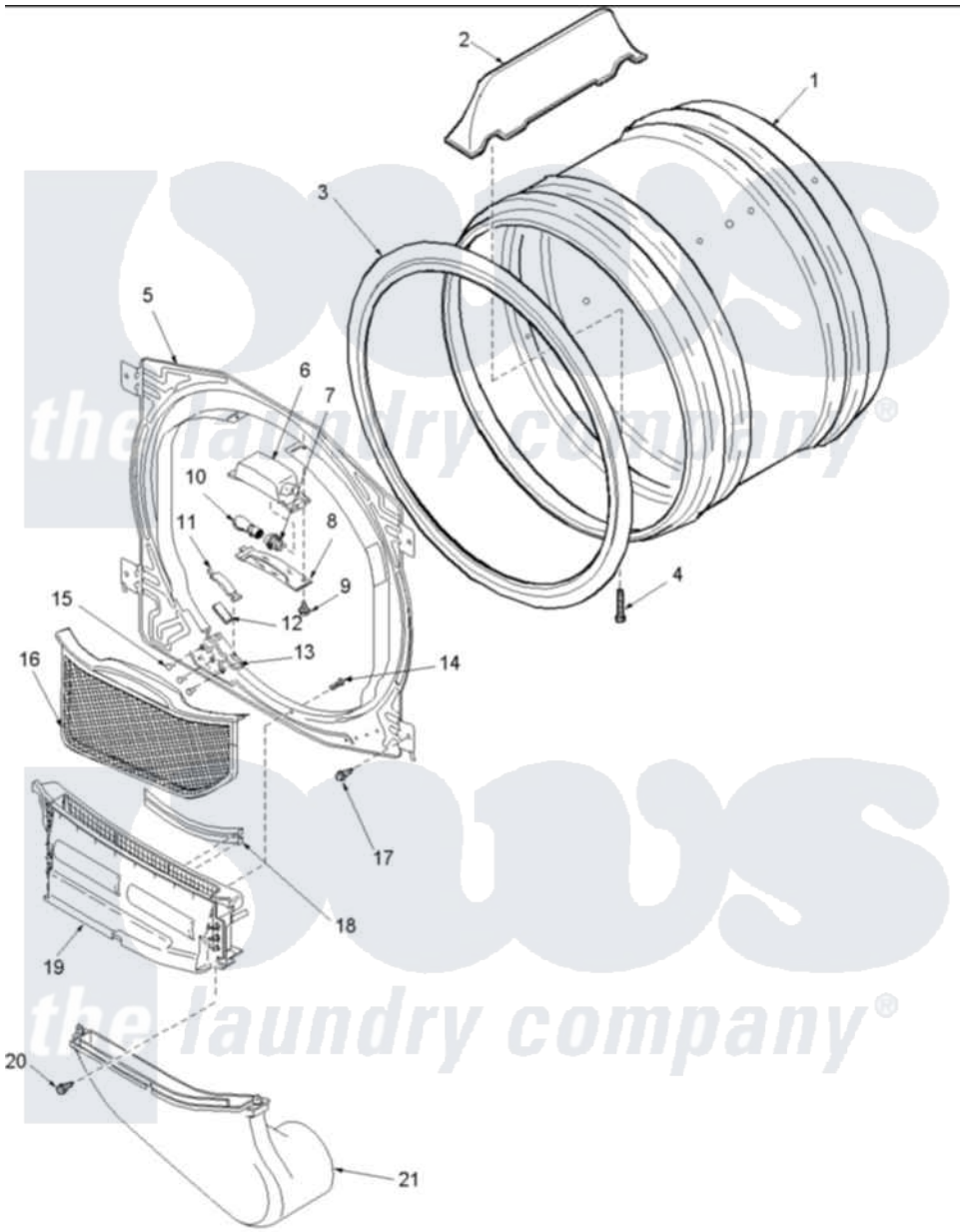

Amana Residential Amana ALG866SBC (BOM: PALG866SBC) Dryer Parts Parts Diagram 04 - FRONT BULKHEAD, AIR DUCT & DRUM
Click on the part number to view part

Item	Original Part Number	Replaced By	Status	Part Description
1	Y504468		Not Available	ASSY CYLINDER
2	503703	12002559		Baffle Kit
3	501801	37001132		Seal, Cylinder
4	Y62588			Screw, 10BT-12 X 1 Tap
5	503616W	503616WP		Assembly, Frt Bulkhead
6	503622	Y504452		Light Assembly
7	504458	Y504452		Light Assembly
8	40094301			Lens, Light
9	500227	505295		Screw, No.8ab-16 x 3/4 PH
10	Y60954	67001316		Bulb, Light
11	40116501	37001298		Glide- Dry
12	500121	510189		Pad Felt
13	37001036			Bracket, Cylinder Glide
15	37001031	3370225		Screw
16	Y503627	37001142		Filter, Lint

18	503625		Sensor, Moisture
19	505528	37001141	Air Duct Assembly
21	Y503626	37001141	Air Duct Assembly

the laundry company®
the laundry company®
the laundry company®