Amana ALG866SBW (BOM: PALG866SBW) 08 - REAR BULKHEAD, ROLLERS & AIR DUCT ASSY

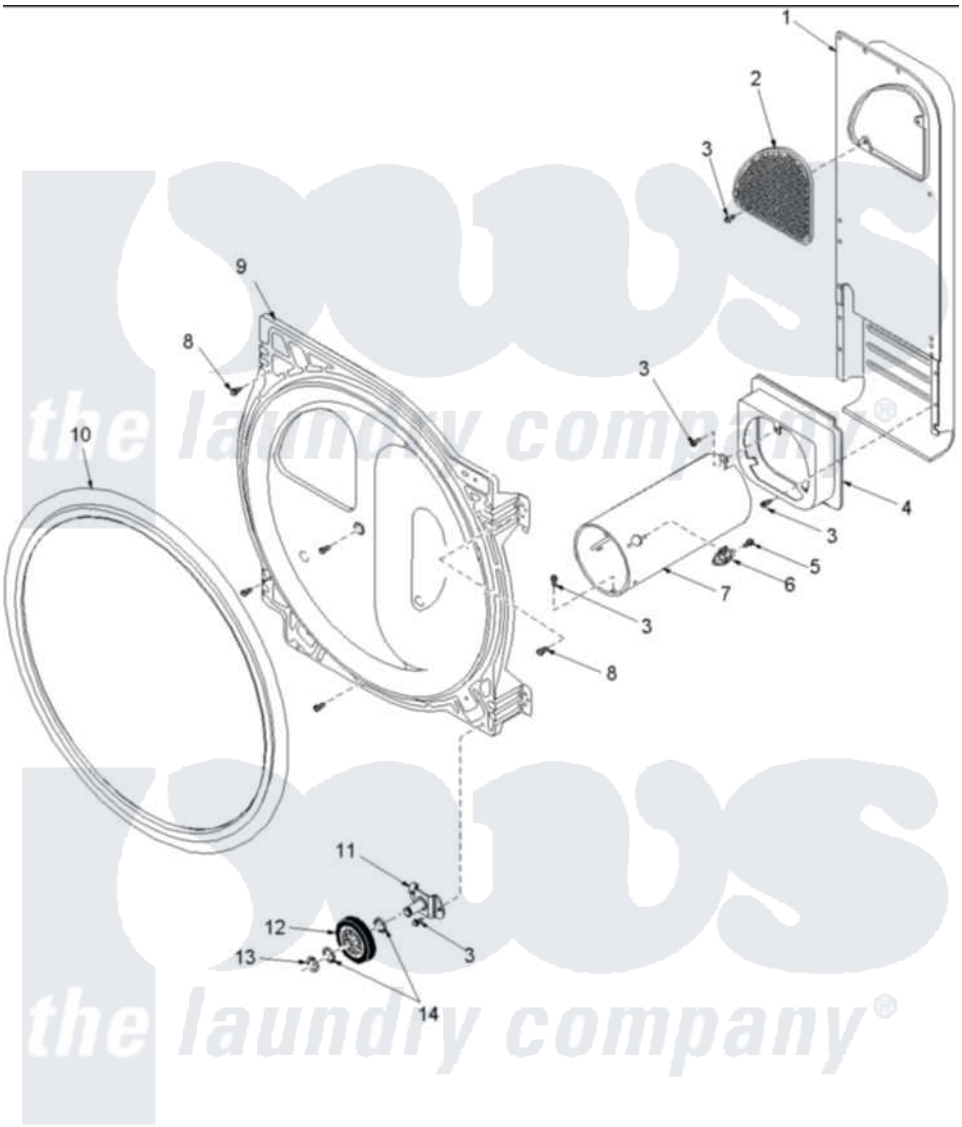

Amana Residential Amana ALG866SBW (BOM: PALG866SBW) Dryer Parts Parts Diagram 08 - REAR BULKHEAD, ROLLERS & AIR DUCT ASSY
Click on the part number to view part

Item	Original Part Number	Replaced By	Status	Part Description
1	503490	503605		Assembly, Heater Duct
2	500074	503605		Assembly, Heater Duct
4	500122	510101		Shroud Heat Duct
5	51782		Not Available	SCREW, 6B-20X5/16
6	Y61886			Thermostat, Limit-Blk
7	Y61888	37001303		Duct- Comb
9	504801W	502614WP		Bulkhead, Rear
10	501801	37001132		Seal, Cylinder
11	40113601			Assembly, Roller Brkt
12	500214	37001042		Assembly, Cylinder Roller
13	23748			Ring, Retaining
14	52549			Washer, 501 ID X3/4 Odx