Amana AWM190W 08 - INLET/FILL HOSE & MIXING VLV MTG BRKT

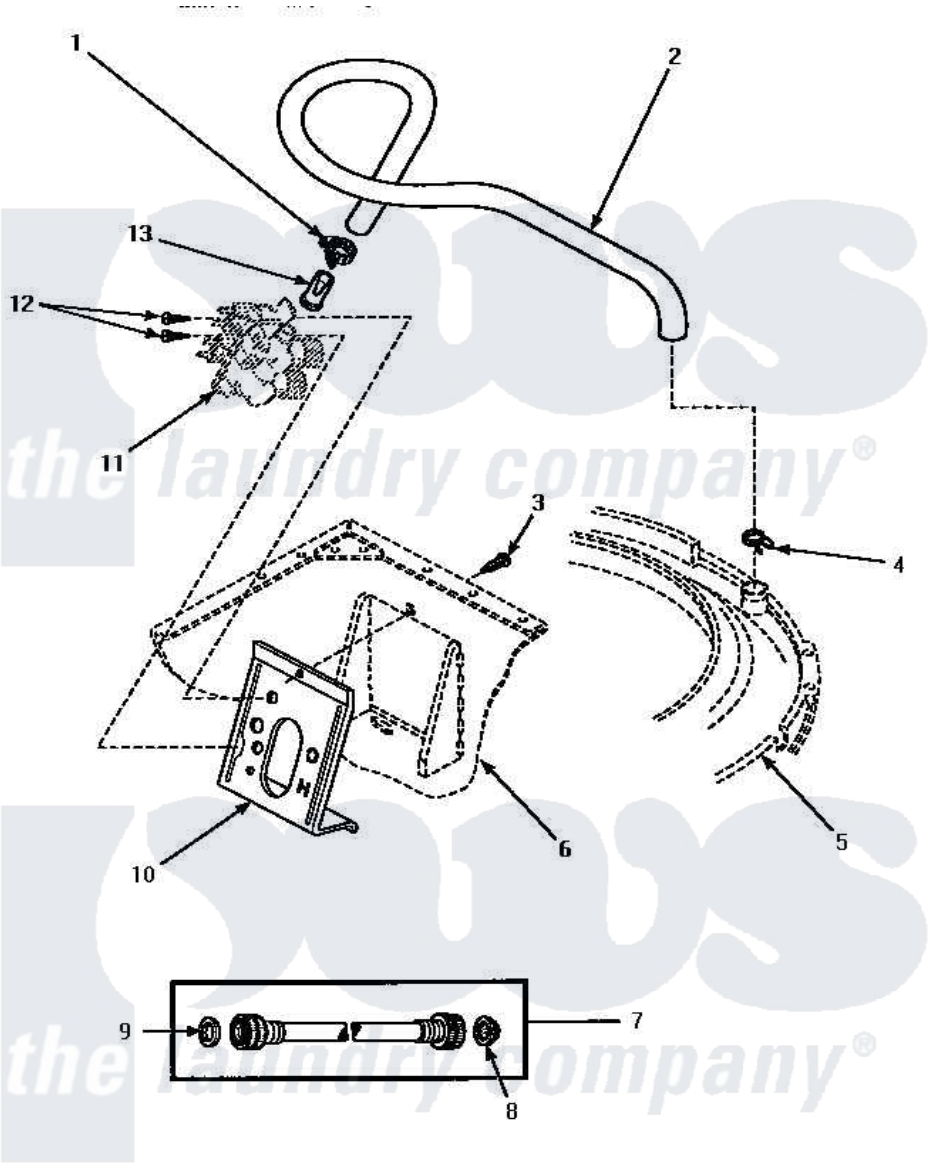

INLET HOSE, FILL HOSE AND MIXING VALVE MOUNTING BRACKET

Amana Residential Amana AWM190W Washer Parts Parts Diagram 08 - INLET/FILL HOSE & MIXING VLV MTG BRKT
Click on the part number to view part

Item	Original Part Number	Replaced By	Status	Part Description
1	27643	596669		Clamp, Manifold
2	35874	38155		Hose, Mix Valve To TU
3	33562	27001200		Screw
4	29210			Hose Clamp
5	Y00000000		Not Available	SEE NOTE OUTER TUB COVER
6	Y00000000		Not Available	SEE NOTE CABINET
7	28330P	202860		Inlet Hose Assembly
8	28605	22002960		Strainer, Washer Inlet
9	20290	Y013783		Washer, Inlet Hose
10	34972	39407		Bracket, Valve
11	Y00000000		Not Available	SEE NOTE MIXING VALVE ASSEMBLY
12	56392		Not Available	SCREW,8-18 X 3/8 TAPPI
13	34500	22001900		Preventer, Back Flow