Amana AWM492 04 - CAB TOP/LOADING DR & CTRL HOOD REAR PAN

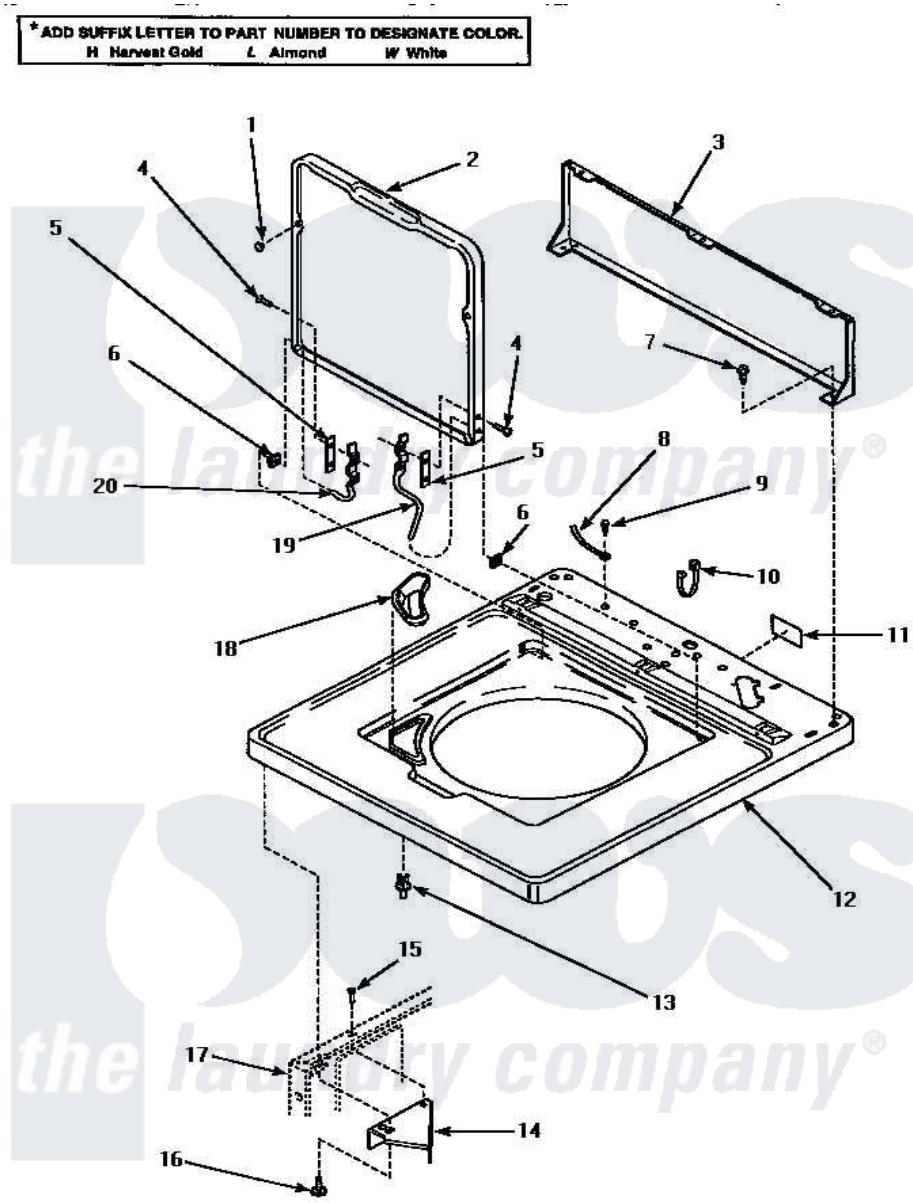

CABINET TOP, LOADING DOOR AND CONTROL HOOD REAR PANEL

Amana Residential Amana AWM492 Washer Parts Parts Diagram 04 - CAB TOP/LOADING DR & CTRL HOOD REAR PAN

Click on the part number to view part

Item	Original Part Number	Replaced By	Status	Part Description
1	21685	40038001		Bumper
2	33541WP			Lid, W/Instructions
"	33541LP			Lid, W/Instructions
"	33541HP		Not Available	LID,W/INSTRUCTIONS
3	34903		Not Available	PANEL, BACK HOOD (USE 37782)
4	34337	W10119828		Screw, Lid Hinge Mounting
5	34338			Gasket, Hinge
6	33446	40008201		Bushing, Hinge
7	23962	W10116760		Screw
8	Y00000000		Not Available	SEE NOTE GROUND WIRE, GREEN
9	52909			Screw, 10B-16 X 1/2 HeX
10	21903	211881		Grommet, Cord Part Not Used-Gas Models Only
11	24903		Not Available	STICKER,DISCONNECT POW

12	34902WP		Not Available	ASSY,TOP-AMANA
"	34902HP		Not Available	ASSY,TOP-DOMESTIC W/BLEACH
"	34902LP			Assembly, Top-Amana
13	56534			Barrel, Support
14	36034			Bracket, Director-Module
15	36035		Not Available	SCREW,8-18X3/8 PHIL FLT HD
16	Y31644	27001200		Screw
17	Y00000000		Not Available	SEE NOTE CABINET
18	34776		Not Available	DISPENSER,BLEACH
19	36437			Hinge, Lid R
20	36438			Hinge, Lid Left

the laundry company®
the laundry company®
the laundry company®