Amana FA2001 18 - PUMP ASSY

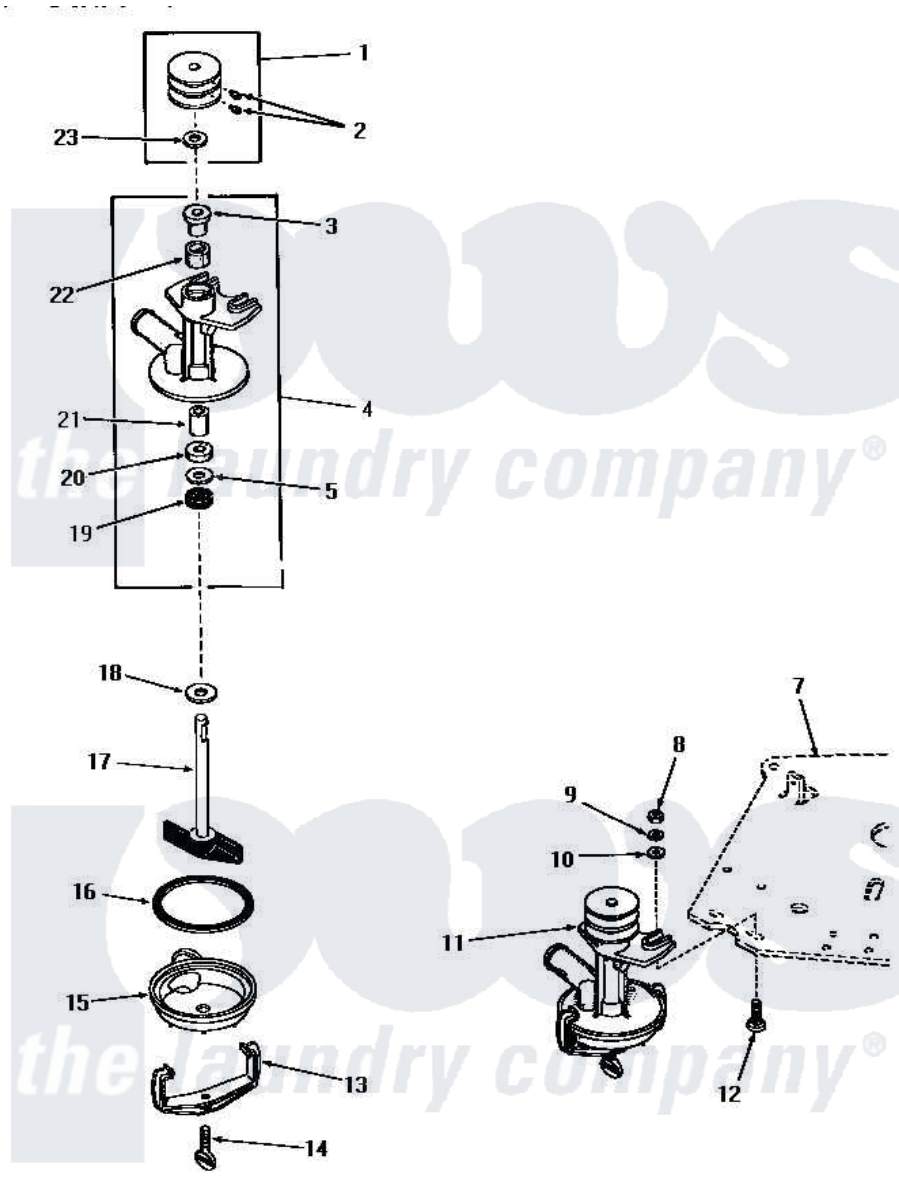

PUMP ASSEMBLY

Amana Residential Amana FA2001 Washer Parts Parts Diagram 18 - PUMP ASSY
Click on the part number to view part

Item	Original Part Number	Replaced By	Status	Part Description
1	23770		Not Available	ASSY,PULLEY
2	02771			Screw, 1/4-20 x 3/8 Hex S
3	20072			Bearing
4	20763		Not Available	PUMP BODY
5	20093			Washer, 29/64 ID x 63/64 OD
7	Y00000000		Not Available	SEE NOTE MOUNTING PLATE
8	20275	27001225		Nut, Jam Mid Lock 1/4-20
9	03189			LoCkwasher, 1/4 Std-C P
10	20176			Washer, .2656 ID x 9/16 OD
11	25178		Not Available	ASSY,PUMP
12	24390			Bolt
13	20066			Clamp, Pump
14	20161			Screw, 5/16-18 X 1-1/16
15	04316		Not Available	BOTTOM,PUMP
16	20097		Not Available	GASKET
17	04372		Not Available	ASSY,IMPELLER

18	20099		Washer, .440idx1.125odx
19	20095		Seal
20	20094		Packing Material
21	20071		Bearing
22	26479		Wick
23	26919	Not Available	WASHER,PUMP PULLEY
NI	131P3		Kit, Pump Kt85

the laundry company®
the laundry company®
the laundry company®