Amana FA2130 15 - MOTOR, FLUID DRIVE & PUMP BELT

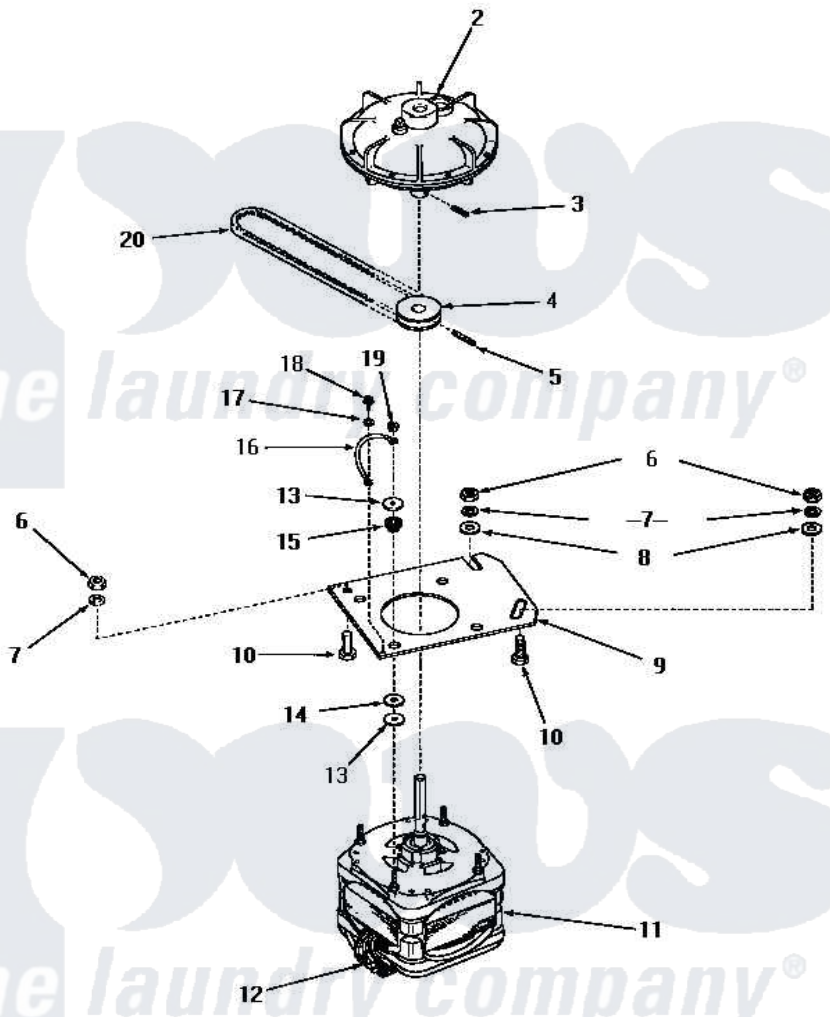

MOTOR, FLUID DRIVE AND PUMP BELT

Amana Residential Amana FA2130 Washer Parts Parts Diagram 15 - MOTOR, FLUID DRIVE & PUMP BELT
Click on the part number to view part

Item	Original Part Number	Replaced By	Status	Part Description
2	24706			Assembly, Fluid Drive
3	24703		Not Available	PIN,ROLL
4	26116			Pulley, Drive
5	23750			Pin, Roll
6	20274	62739		Nut, Lock
7	20277			Lockwasher, 3/8 Std X 3
8	20279			Washer, 13/32 ID x 13/16 OD
9	23769		Not Available	PLATE,MOUNTING
10	20255		Not Available	SCREW,3/8-16 X 1 HEX H
11	24725		Not Available	MOTOR, ONE SPEED, 120V, 60 HZ.
12	Y24149			Switch, Motor
"	24140		Not Available	SWITCH,MOTOR
13	20103	M0270519		Washer
14	20104			Washer
15	20102		Not Available	WASHER
16	25484		Not Available	GROUND WIRE

17	21735	Not Available	LOCKWASHER,No.10 INTSHKP
18	20530		Screw, 10-24 x 3/8 Hex
19	23604		Nut, Hex 10-32 Lock
20	23759	Not Available	BELT
NI	20299	Not Available	FLUID DRIVE FLUID-BULK

the laundry company®
the laundry company®
the laundry company®