Amana FA2130 19 - TRANSMISSION ASSY

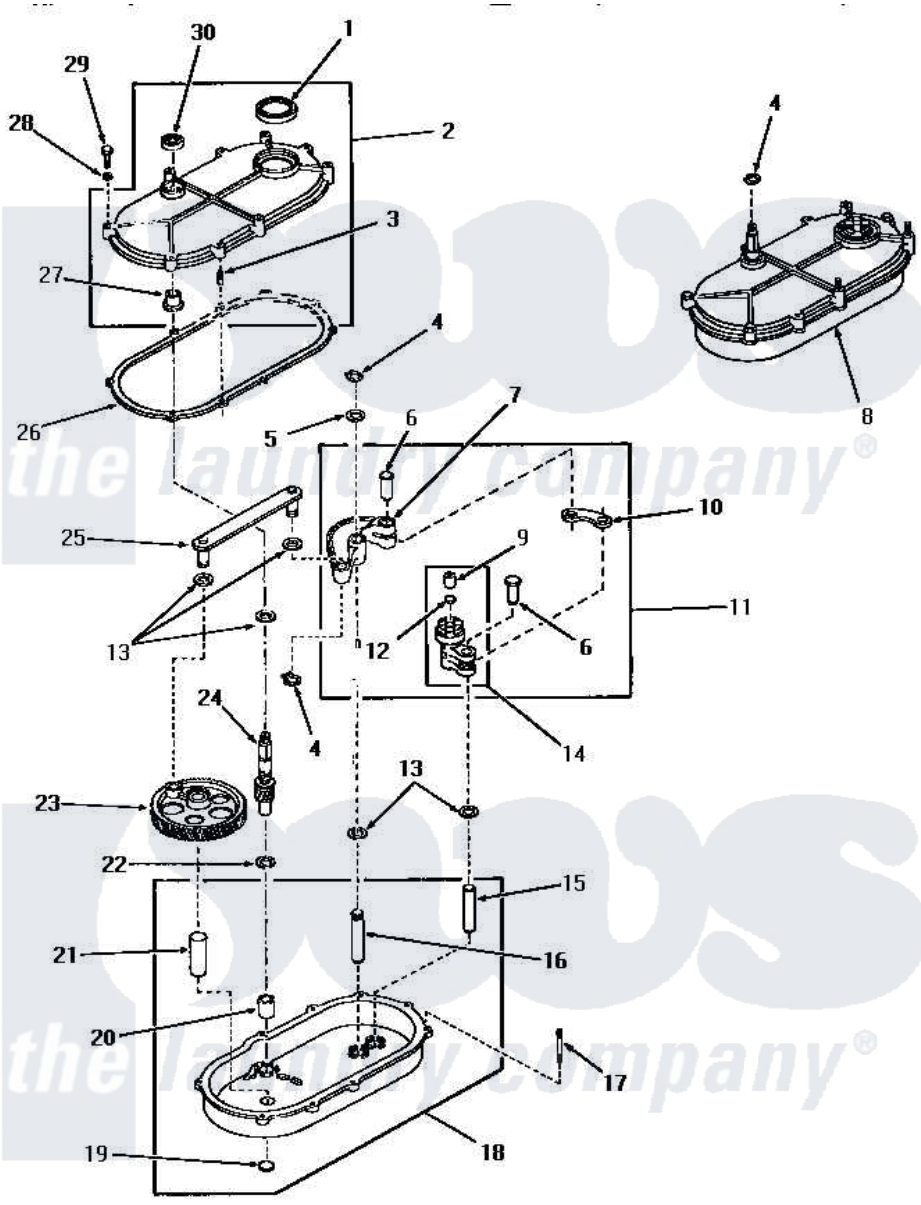

TRANSMISSION ASSEMBLY

Amana Residential Amana FA2130 Washer Parts Parts Diagram 19 - TRANSMISSION ASSY
Click on the part number to view part

Item	Original Part Number	Replaced By	Status	Part Description
1	20199			Seal
2	20216		Not Available	ASSY,TRANSMISSION COVE
3	20197		Not Available	DOWEL PIN
4	23751			Ring, Retaining
5	20212	35092		Washer, 3628id X 1.00 X .056
6	01690			Pin, Link
7	05005	05005P		Assembly
8	23828			Assembly, Transmission
9	01711		Not Available	BEARING
10	Y04999		Not Available	LINK
11	20220			Assembly, Rocker Arm
12	Y02479			Disc, Expansion
13	01791			Washer, .626 X 1.125 X1
14	20219	30927P		Assembly Clutch Arm
15	01688		Not Available	PIN
16	24817		Not Available	PIN,ROCKER ARM

17	20155		Not Available	STUD,DOUBLE END 1/4-20
18	23927		Not Available	ASSY,TRANSMISSION xREPLACE
19	Y02769			Disc
20	01993			Bearing, 7/8odx5/8id
21	03477		Not Available	PIN
22	20198	41813		Csa 20198 20 4w 19 Deg Cc
23	02175		Not Available	GEAR,CRANK
24	23645			Pinion
25	03969	03969P		Rod Connecting
26	20059			Gasket
27	20082			Bearing
28	03189			LoCkwasher, 1/4 Std-C P
29	20257		Not Available	SCREW,1/4-20 X 1-1/4 H
30	20200			Seal
NI	02528	02528P		Grease Transmission Mobil 209

the laundry company®
the laundry company®
the laundry company®