Amana FA2961 09 - CONTROL PANEL, CONTROL HOOD & CONTROLS

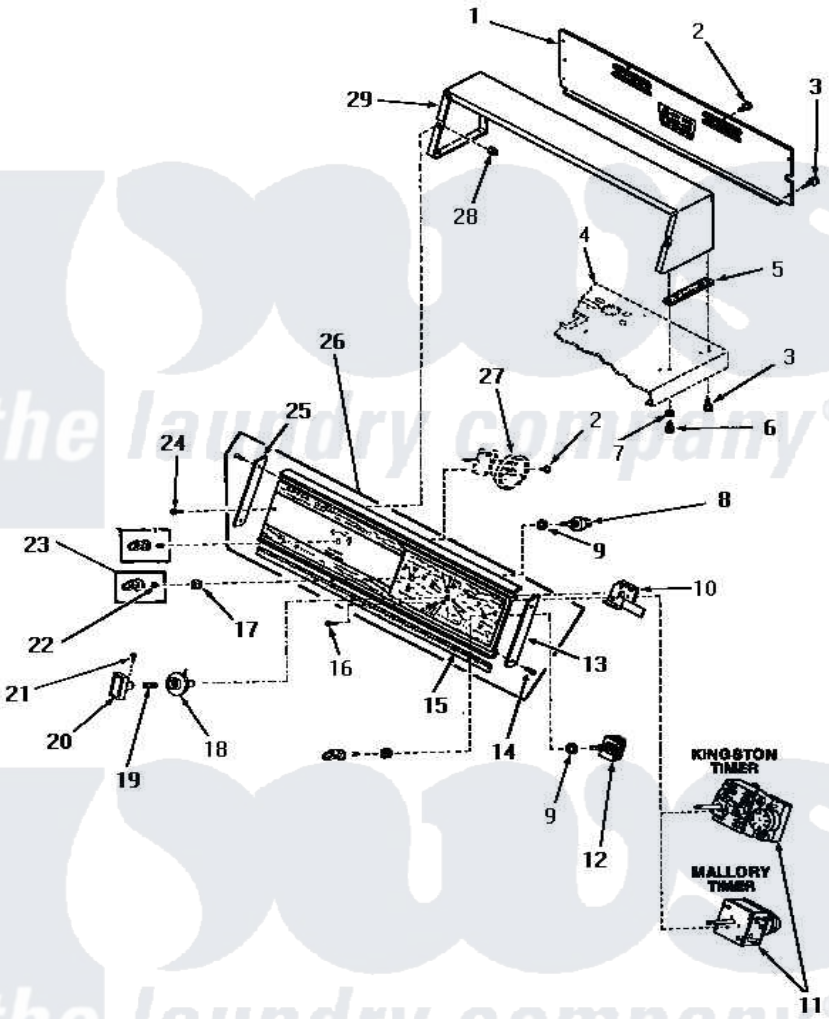

CONTROL PANEL, CONTROL HOOD AND CONTROLS

Amana Residential Amana FA2961 Washer Parts Parts Diagram 09 - CONTROL PANEL, CONTROL HOOD & CONTROLS
Click on the part number to view part

Item	Original Part Number	Replaced By	Status	Part Description
1	22890GR		Not Available	CONTROL HOOD REAR COVER, GRAY
2	23222	3177991		Screw
3	25724		Not Available	HEX HEAD SCREW
4	Y00000000		Not Available	SEE NOTE CABINET TOP
5	23028		Not Available	GASKET,CONTROL BOX END
6	51250		Not Available	HEX HEAD SCREW
7	20493			Washer, 11/64 ID x 3/8 OD
8	21300		Not Available	SWITCH,TEMPERATURE
9	91176			Lockwasher, 3/8 Intshkp
10	26952		Not Available	SPACER
11	26918			Timer
12	21302			Switch, Motor-2SP
13	25073		Not Available	END CAP, RIGHT
14	52864	500226		Screw, 8b-16 x 5/8 Tap

15	25071	Not Available	GASKET
16	20272	Not Available	PHILLIPS HEAD SCREW
17	24205		Nut, Knurled 3/8-24
18	26326	Not Available	TIMER KNOB INDICATOR
19	26319		Spring
20	26321	Not Available	TIMER KNOB
21	26318		Screw, 8-32 X 1/4 Set S
22	23392	Not Available	CLIP FOR 26816 KNOB
23	24291		Assembly, Knob
24	25232	Not Available	SCREW,8AB-18X7/8 OVAL
25	25072	Not Available	END CAP, LEFT
26	27282	Not Available	xREPLACE
27	Y00000000	Not Available	SEE NOTE PRESSURE SWITCH
28	54038		NUt, Speed U-Type
29	22881H	Not Available	CONTROL HOOD, HARVEST GOLD
"	22881W	Not Available	CONTROL HOOD, WHITE
"	22881L	Not Available	CONTROL HOOD, ALMOND
"	22881A	Not Available	CONTROL HOOD, AVOCADO

the laundry company®
the laundry company®