Amana HA5591 07 - FRONT PANEL, CABINET & BASE

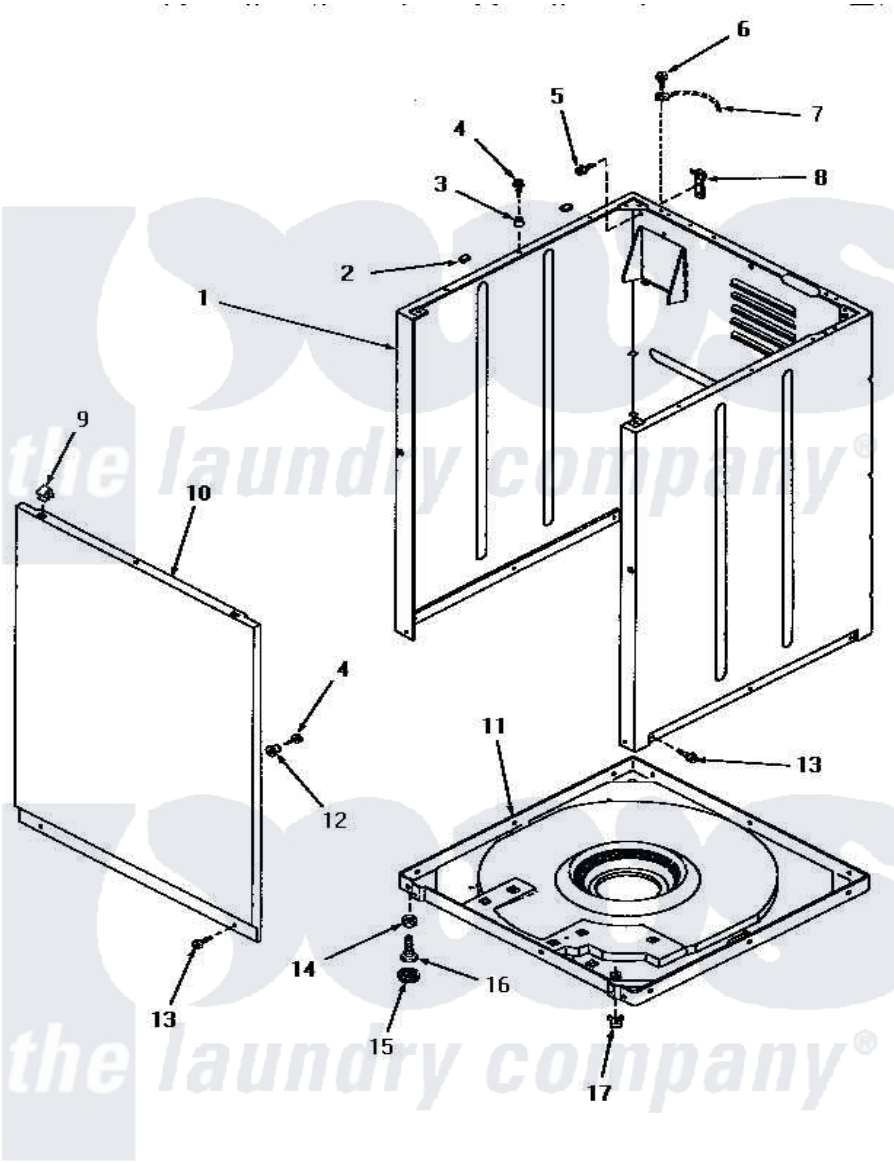

FRONT PANEL, CABINET AND BASE

Amana Residential Amana HA5591 Washer Parts Parts Diagram 07 - FRONT PANEL, CABINET & BASE
Click on the part number to view part

Item	Original Part Number	Replaced By	Status	Part Description
1	27092W		Not Available	CABINET, WHITE
"	27092L	38612LP		Kit Service Cabinet
"	29168W	38612WP		Kit-Servic
"	29168A		Not Available	CABINET, AVOCADO
"	27092A		Not Available	CABINET, AVOCADO
"	29168L		Not Available	CABINET, ALMOND
"	29168H		Not Available	CABINET, HARVEST GOLD
"	27092K		Not Available	CABINET, COFFEE
"	29168K		Not Available	CABINET, COFFEE
"	27092H		Not Available	CABINET, HARVEST GOLD
2	Y56128			Pad, Bumper
3	56079	505187		Locator, Panel
4	56086	Y014874		Screw, Idler Arm And Sleeve
5	51780	3390631		Screw, 10-16 X 3/8
6	56392		Not Available	SCREW,8-18 X 3/8 TAPPI
7	Y00000000		Not Available	SEE NOTE GROUND WIRE, GREEN

8	Y27103			Hinge, Hold-Down Lug
9	28835	22001650		Fastener, Spring
10	27072A		Not Available	FRONT PANEL, AVOCADO
"	27072K		Not Available	FRONT PANEL, COFFEE
"	27072H		Not Available	FRONT PANEL, HARVEST GOLD
"	27072L	32708LP		Panel, Front
"	27072W		Not Available	FRONT PANEL, WHITE
11	29757		Not Available	BASE
12	28102			Locator, Panel
13	27196	27001200		Screw
14	Y21899	40038101		Nut, Leg
15	21749	40016001		Foot, Rubber
16	20409	22003428		Leg, Adjustable
17	28837		Not Available	CAGE NUT
NI	26594P			Grease, Silicone - 2 Oz Tube