Amana LEC50AW (BOM: PLEC50AW) 09 - TERMINALS AND MOTOR CONNECTION BLOCK

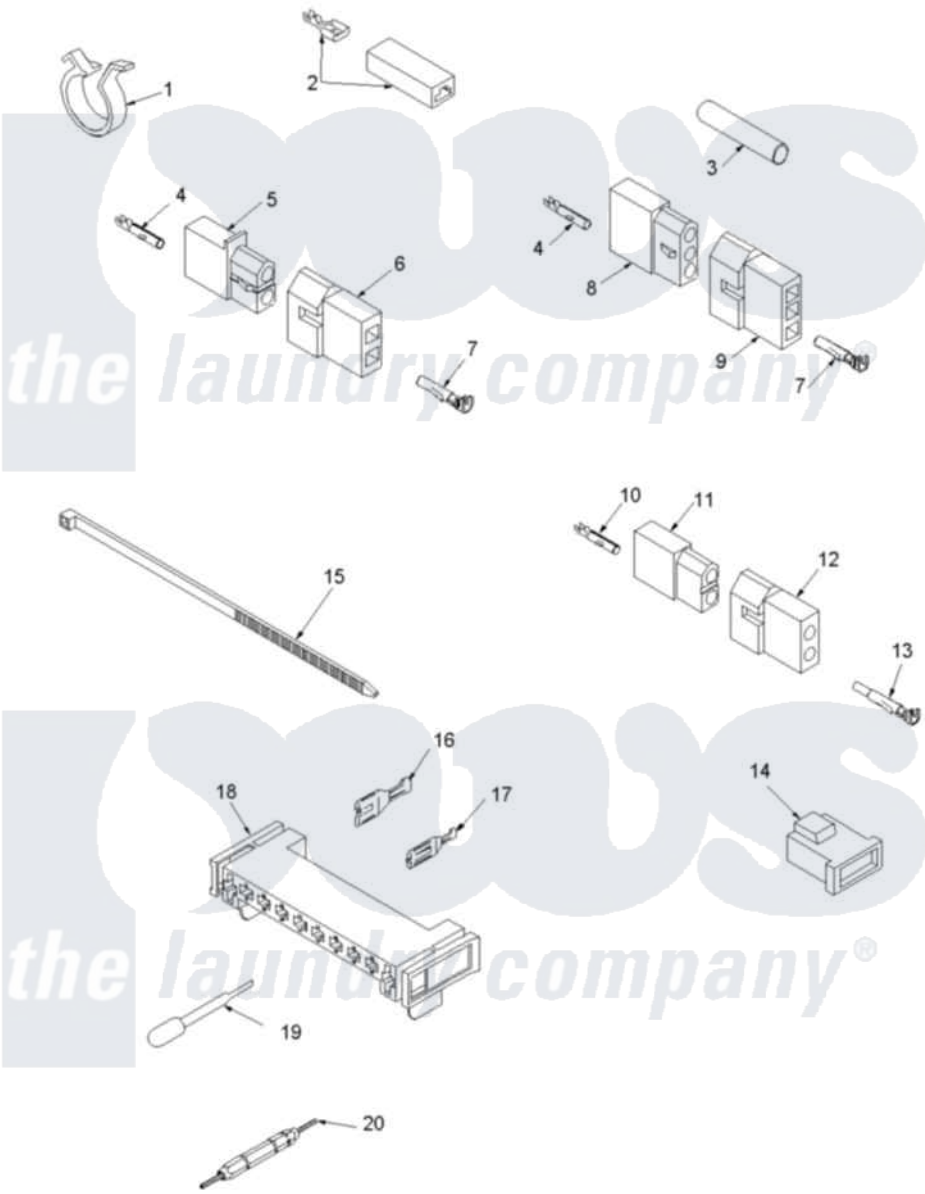

Amana Residential Amana LEC50AW (BOM: PLEC50AW) Dryer Parts Parts Diagram 09 - TERMINALS AND MOTOR CONNECTION BLOCK
Click on the part number to view part

Item	Original Part Number	Replaced By	Status	Part Description
1	504034			Clip, Wire
2	Y00237			Terminal-Female 1/4 ((1) 12 GAuge Wire Or(2) 18 GA
3	Y21365	503670		Sleeve Insulator
4	Y00117	5011-XX		093 Female Socket
5	56451			Receptacle, 2 Circuit
6	56448			Terminal Block Plug
7	Y00116			Terminal, Pin-Male
8	23039	697780		Receptacle,
9	23040			Plug-3 Circuit
10	00130			Terminal, Pin-1/8 Femal
11	56265			Receptacle, 2 Circuit
12	56266			Plug
13	Y00127			Terminal, Pin-1/8 Male
14	58800		Not Available	CONNECTOR-3 CIRCUIT (3

14	38800		Not Available	CIRCUIT CONNECTOR)
15	36466	M0321209		Tie-Electrical
16	Y00256			Spade Terminal Or
"	00255		Not Available	(1/4 INCH-FOR (1) 12 GAUGE WIR
17	Y00188			Molex Terminal
18	500338			Housing-10 Position
19	283P4			Terminal Extractor Tool
20	190P4			Terminal Extractor Tool

the laundry company®
the laundry company®
the laundry company®