Amana LG4309L (BOM: P1163504W L) 09 - LOADING DOOR WITH DRYING RACK

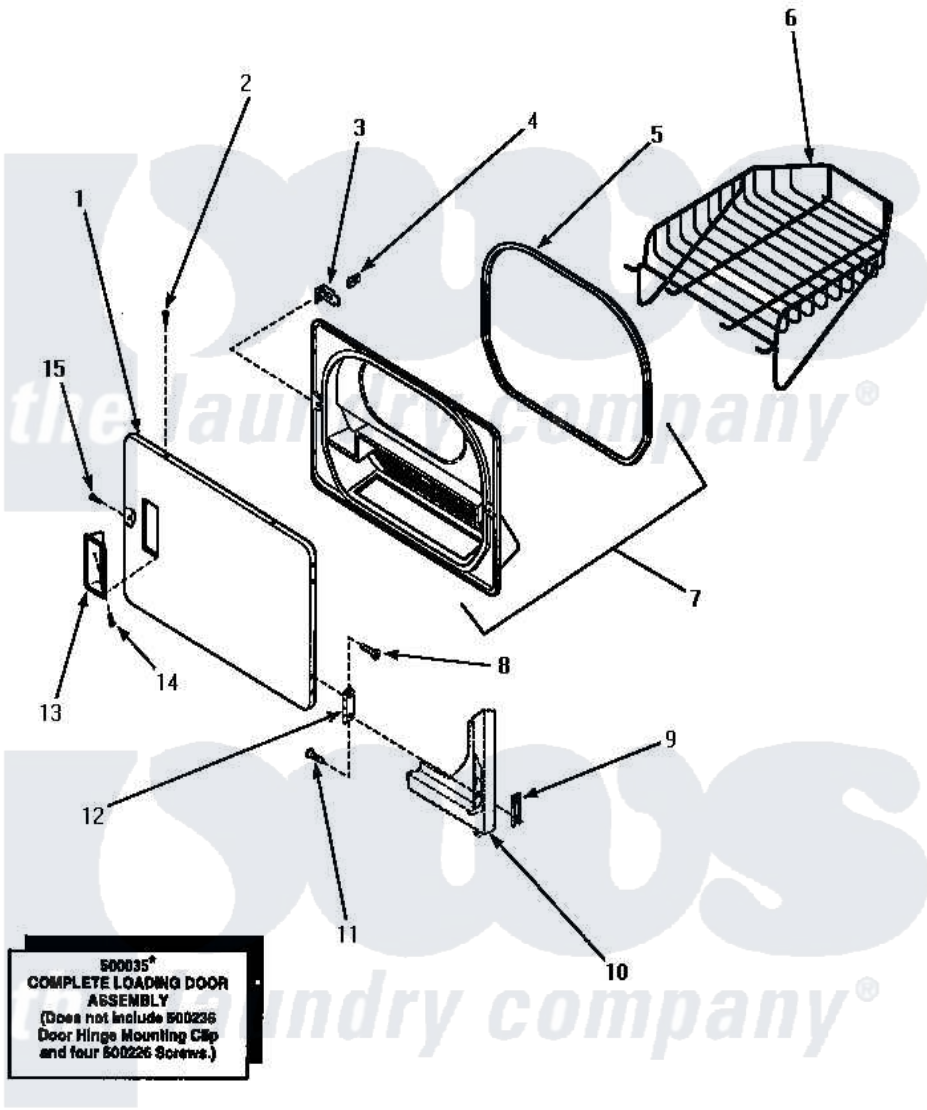

LOADING DOOR WITH DRYING RACK

Amana Residential Amana LG4309L (BOM: P1163504W L) Dryer Parts Parts Diagram 09 - LOADING DOOR WITH DRYING RACK

Click on the part number to view part

Item	Original Part Number	Replaced By	Status	Part Description
1	500040L			Assembly, Door-Home
"	500040W			Assembly, Door-Home
2	500226			Screw, 8b-16 x 5/8 Tap
3	500223	40116201		Bracket, Door Strike
4	500039	510181		Strike Doormetal
5	500200		Not Available	SEAL,DOOR
6	501295P		Not Available	RACK, DRYING
7	500199		Not Available	ASSY,LINER & SEAL
8	500226			Screw, 8b-16 x 5/8 Tap
9	500236			Clip, Door Hinge Mount
10	Y00000000		Not Available	SEE NOTE FRONT PANEL
11	500226			Screw, 8b-16 x 5/8 Tap
12	500041	Y503676		Hinge, Door And Top
13	500042L		Not Available	PULL,DOOR
"	500042W		Not Available	PULL,DOOR

14	500297	8281236		Screw
15	500226			Screw, 8b-16 x 5/8 Tap
NI	500035W		Not Available	ASSY,DOOR-HOME
"	500035L		Not Available	ASSY,DOOR-HOME